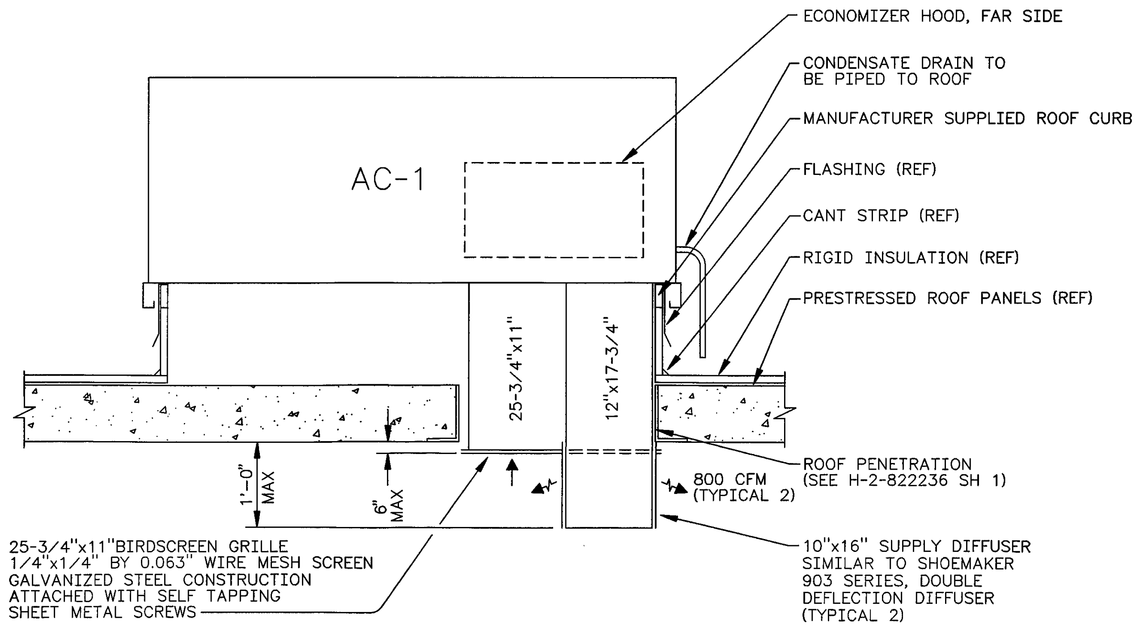

A SECTION
H-2-822390 SCALE: 1"=1'-0"

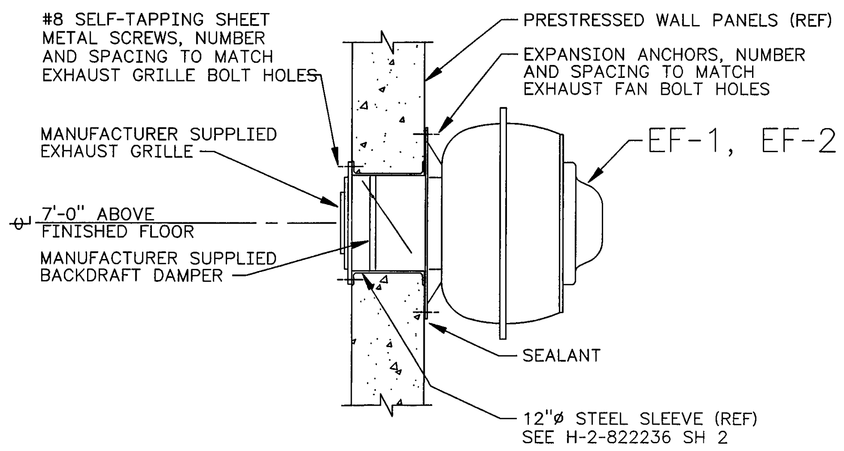

1 DETAIL
H-2-822390 SCALE: 1"=1'-0"
& H-6-13980

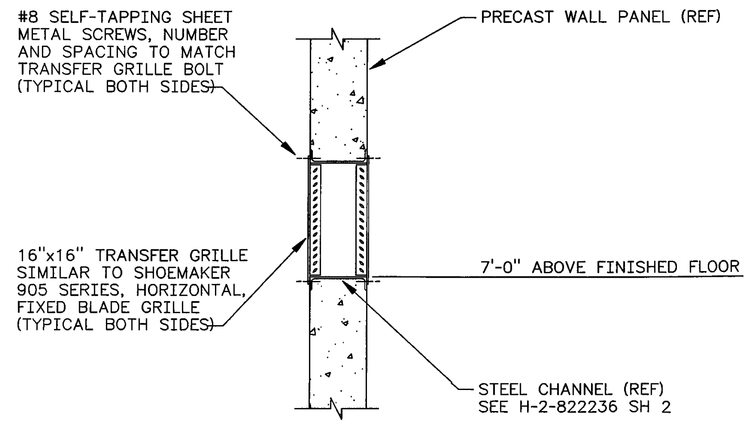

4 DETAIL
H-2-822391 SCALE: 1"=1'-0"

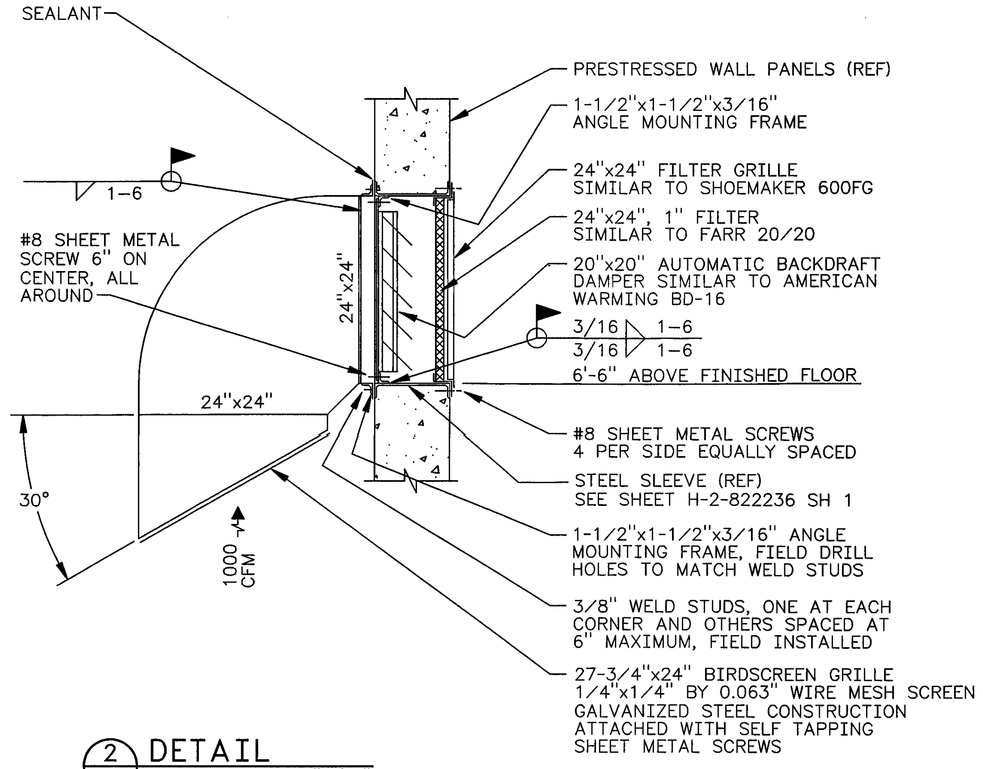

2 DETAIL
H-2-822390 SCALE: 1"=1'-0"
& H-6-13980

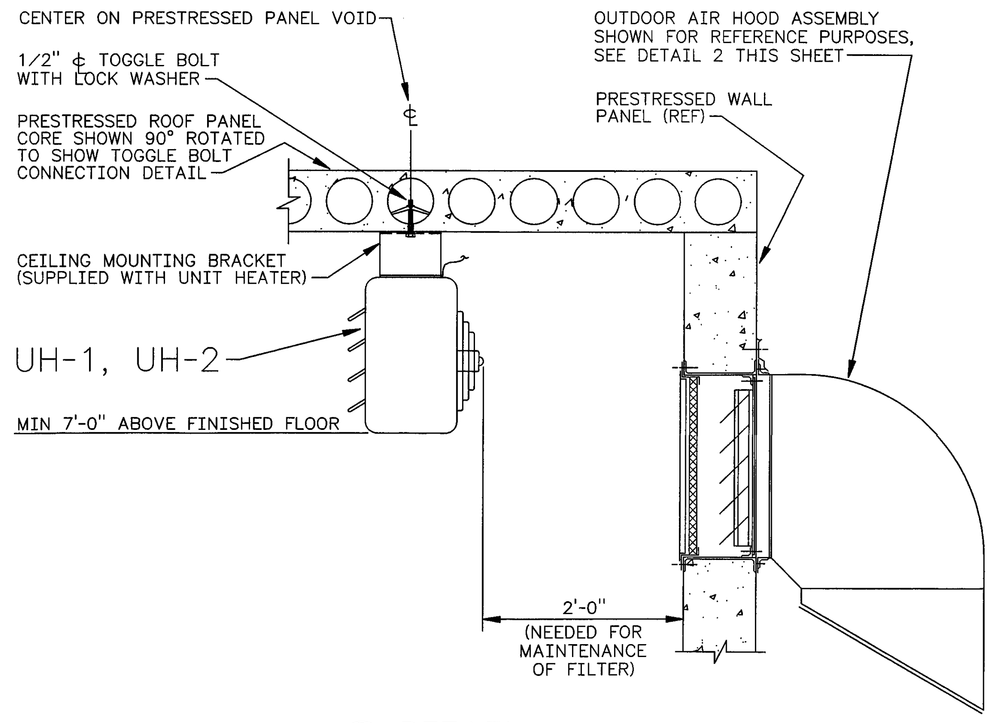

3 DETAIL
H-2-822390 SCALE: 1"=1'-0"
& H-6-13980

11/9/97

EXPIRES: 9/1/99

NUMBER	TITLE (DRAWING TRACEABILITY LIST)	NUMBER	TITLE (REFERENCES)
		H-2-822200	DWG LIST
		NEXT USED ON	

MF	REV NO.	DESCRIPTION	REV BY DATE	KEH APPROVALS	APVD FOR IMPL/INC FOR DATE
S	1	ECN W-058-350 W-058 PROJECT TURNOVER PER	WL 11/18/97	GR 11/19/97	11/19/97

REVISIONS

CAD FILE B822392A CAD CODE 2J:IBM:ACD2:12.0:NN XREF'S N

DESIGNED	WS ARMSTRONG	DATE
DSGN ENGR	PAUL RICE	10/02/1995
CHECKED	CLAUD W KELLY	10/03/1995
SAFETY	SEE DR/AT FORM	
ENVIR	SEE DR/AT FORM	
QUAL ENGR	SEE DR/AT FORM	
LEAD ENGR		
REVISION NO.	8	10/02/1995

APPROVED FOR IMPLEMENTATION
BY CARL VAN KATWIJK
FOR WHC DATE 10/12/95

SAFETY CLASS 3 USE CONSTRUCTION EDT

M U.S. DEPARTMENT OF ENERGY
RICHLAND OPERATIONS OFFICE
ICF KAISER HANFORD COMPANY

HVAC
SECTIONS AND DETAILS
6241-A AND 6241-V

PROJECT W-058, REPLACEMENT OF CROSS-SITE TRANSFER SYSTEM

SIZE	BLDG NO.	INDEX NO.	DWG NO.	REV NO.
F	6241-A 6241-V	8900	H-2-822392	1

SCALE SHOWN JOB NO. CR1320 SHEET 1 OF 1

PLOT SCALE: 1=1 KEHCAD

KEH 0350.00.03/940
STRTKEHF: 199403030600