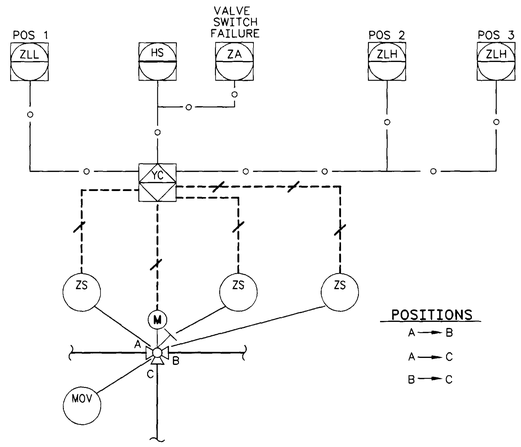

MOTOR OPERATED 3-WAY VALVE DIAGRAM

TYPICAL DETAIL FOR ALL 3-WAY MOV'S

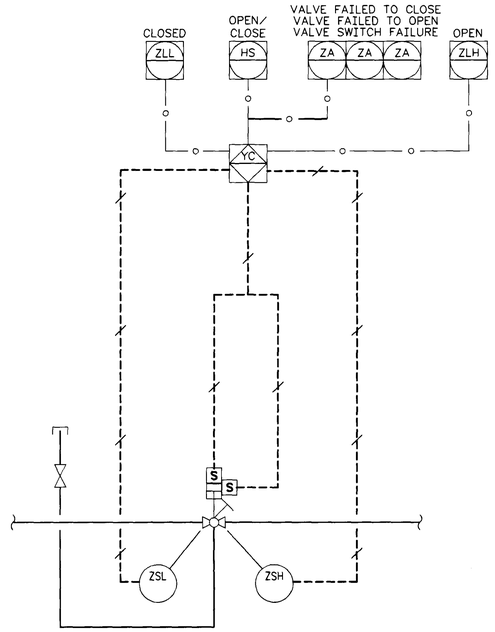

PISTON OPERATED VALVE DIAGRAM WITH INTEGRAL SOLENOID ACTUATOR

TYPICAL DETAIL FOR ALL SOV'S

PROGRAMMABLE LOGIC

(PRE-PROGRAMMED TRANSFER SCHEME)

YC *

1 VALVE PIT 241-SY-A TO VALVE PIT 241-A-B (SUPERNATE)
2 VALVE PIT 241-SY-B TO VALVE PIT 241-A-A (SLURRY)
3 VALVE PIT 241-A-B TO VALVE PIT 241-SY-A (SUPERNATE)

LINE IDENTIFICATION

IA(150#)-3100(1"-M4)

- MATERIAL CODE (SEE CONSTRUCTION SPEC)
- SIZE
- LINE NUMBER
- PRESSURE (PSIG)
- SYSTEM

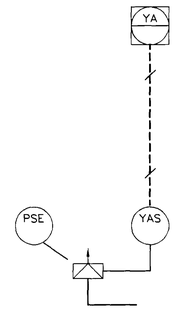

RUPTURE DISK INSTRUMENTATION

(TYPICAL DETAIL)

INTERLOCK LOGIC

SOFTWARE

I *

1 IF A LEAK IS DETECTED SHUTDOWN OPERATING BOOSTER PUMP, P-3125A OR P-3125B, TRANSFER PUMP P-102-SY-024, AND INPUT SIGNAL TO 200-WEST MASTER PUMP CIRCUIT.

2 ON HIGH PRESSURE SHUTDOWN OPERATING BOOSTER PUMP, P-3125A OR P-3125B

3 ON LOW LEVEL, SHUTDOWN TRANSFER PUMP P-102-SY-02A

4 SUMP PUMP WILL NOT BE PERMITTED TO OPERATE IF ASSOCIATED OUTLET VALVE IS NOT OPEN

5 ON POSITVE PRESSURE (GAGE), IN TRANSFER LINE, VENT VALVES WILL NOT BE PERMITTED TO OPEN

6 THE OPERATING BOOSTER PUMP, P-3125A OR P-3125B WILL SHUTDOWN:

A) ON HIGH PUMP BEARING TEMPERATURE

B) ON HIGH MOTOR WINDING TEMPERATURE

C) ON HIGH VIBRATION

D) ON PUMP SEAL FAILURE

E) ON LOW OIL LEVEL

7 THE BOOSTER PUMP WILL NOT BE PERMITTED TO OPERATE IF THE INLET PRESSURE IS LOWER THAN 10 PSIG

8 SHUTDOWN OPERATING BOOSTER PUMP WHEN RUPTURE DISK PSE-841 OR PSE-842 FAILS

9 TRANSFER PUMP P-102-SY-02A, WILL NOT BE PERMITTED TO OPERATE IF OPERATING BOOSTER PUMP IS SHUTDOWN

10 UPSTREAM TRANSFER PUMP P-102-SY-02A, WILL BE SHUTDOWN IF INLET PRESSURE REACHES 70 PSIG.

14 ON HIGH DISCHARGE PRESSURE SHUTDOWN APPROPRIATE OPERATING PUMP.

15 THE BOOSTER PUMP WILL NOT BE PERMITTED TO START IF THE ASSOCIATED VENT AND DRAIN VALVES ARE NOT CLOSED.

18 ON LOW LEVEL, SHUTDOWN FLUSH PUMP P-3100A.

20 ON HIGH PRESSURE, SHUTDOWN TRANSFER PUMP P-102-SY-02A.

21 ON POSITIVE PRESSURE (GAGE), IN TRANSFER LINE, SUMP PUMP VALVES WILL NOT BE PERMITTED TO OPEN.

22 INPUT SIGNAL TO 200-WEST MASTER PUMP SHUTDOWN CIRCUIT IF SUPERNATE PRESSURE AT 6241-V REACHES 180 PSIG.

HARDWARE

I *

11 ON LEAK DETECTION, SHUTDOWN BOOSTER PUMP P-3125A AND P-3125B.

12 ON LEAK DETECTION, SHUTDOWN TRANSFER PUMP P-102-SY-02A.

13 ON LEAK DETECTION, INPUT SIGNAL TO 200 EAST AND 200 WEST MASTER SHUTDOWN CIRCUITS. SEE DRAWINGS H-2-822441, SHEET 1 AND H-2-822440, SHEET 1.

16 ON HIGH PRESSURE, INPUT SIGNAL TO 200 WEST MASTER SHUTDOWN CIRCUITS.

17 IF VALVE IS OPEN, INPUT SIGNAL TO 200 WEST MASTER SHUTDOWN CIRCUITS.

19 ON HIGH PROCESS TEMPERATURE, HIGH HEATER SHEATH TEMPERATURE, OR LOW FLOW, HEATER IS SHUTDOWN

NOTE:

1. SEE CONSTRUCTION DRAWINGS AND SPECIFICATIONS FOR COMPONENT SAFETY CLASSES.

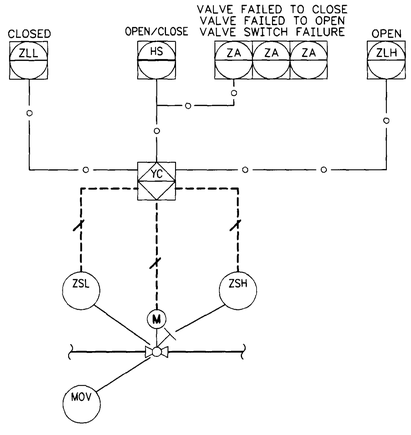

MOTOR OPERATED VALVE DIAGRAM

TYPICAL DETAIL FOR ALL MOV'S

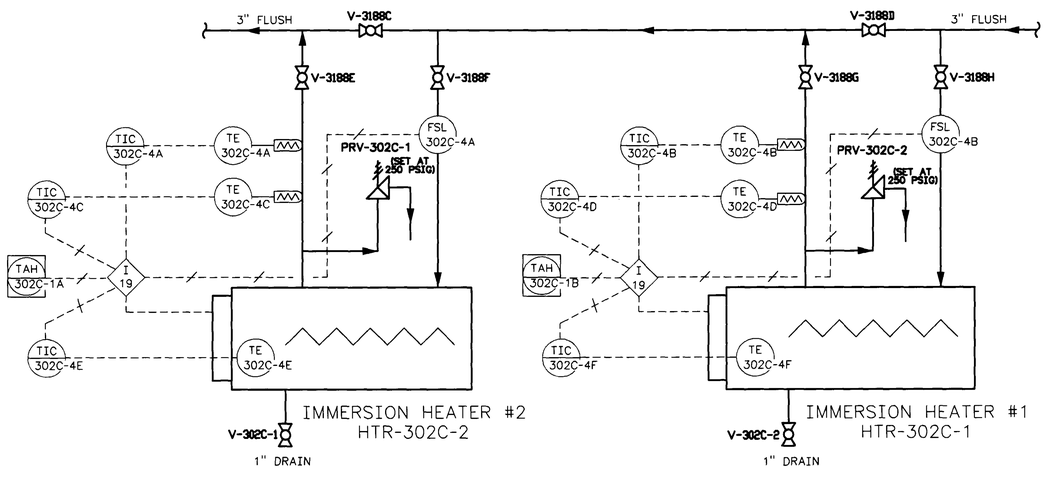

ELECTRIC CIRCULATION HEATING SYSTEM

(SEE DRAWING H-2-822409)

ESSENTIAL DRAWING

DATE OCT 17 2001 STA. 4 HANFORD RECORDS CENTER

NUMBER	TITLE
H-14-020000	TK FARMS SYS P&ID DWG LEGEND
H-2-822200	DRAWING LIST

DRAWING TRACEABILITY LIST — REFERENCES — NEXT USED ON H-2-822200

REV NO.	DESCRIPTION	REV BY DATE	KEH APPROVALS	APVD FOR IMPL-ENT FOR DATE
7	INCORPORATED ECN 665973	ORR 10/01		

REVISIONS — CAD FILE — CAD CODE — KREF'S N

DESIGNED	W. ZICKUHR	DATE	
DWN ENGR	M.A. FRIEDRICH	10-10-95	
CHECKED	C.T. INAMINE	10-10-95	
SAFETY	SEE DR/AT FORM		
ENVIR	SEE DR/AT FORM		
QUAL ENGR	SEE DR/AT FORM		
LEAD ENGR	J.R.COLLINS	10-10-95	
REVISION NO.	34	10-10-95	

APPROVED FOR IMPLEMENTATION BY C. VAN KATWIJK FOR WHC DATE 10-13-95

SAFETY CLASS 2, SEE NOTE 1 — USE CONSTRUCTION — EDT 612958

U.S. DEPARTMENT OF ENERGY
OFFICE OF RIVER PROTECTION

P&ID
LEGEND

PROJECT W058 REPLACEMENT OF CROSS-SITE TRANSFER SYSTEM

SIZE	BLDG NO.	INDEX NO.	DWG NO.	REV NO.
F	200W 200E	7004	H-2-822400	7

SCALE NONE — JOB NO. CR1320 — SHEET 1 OF 3

27351 — 2 PLOT SCALE: 1=1 — KEHCAD — 1

FOR FIELD VERIFICATION — STATUS SEE ↑ — REV 6