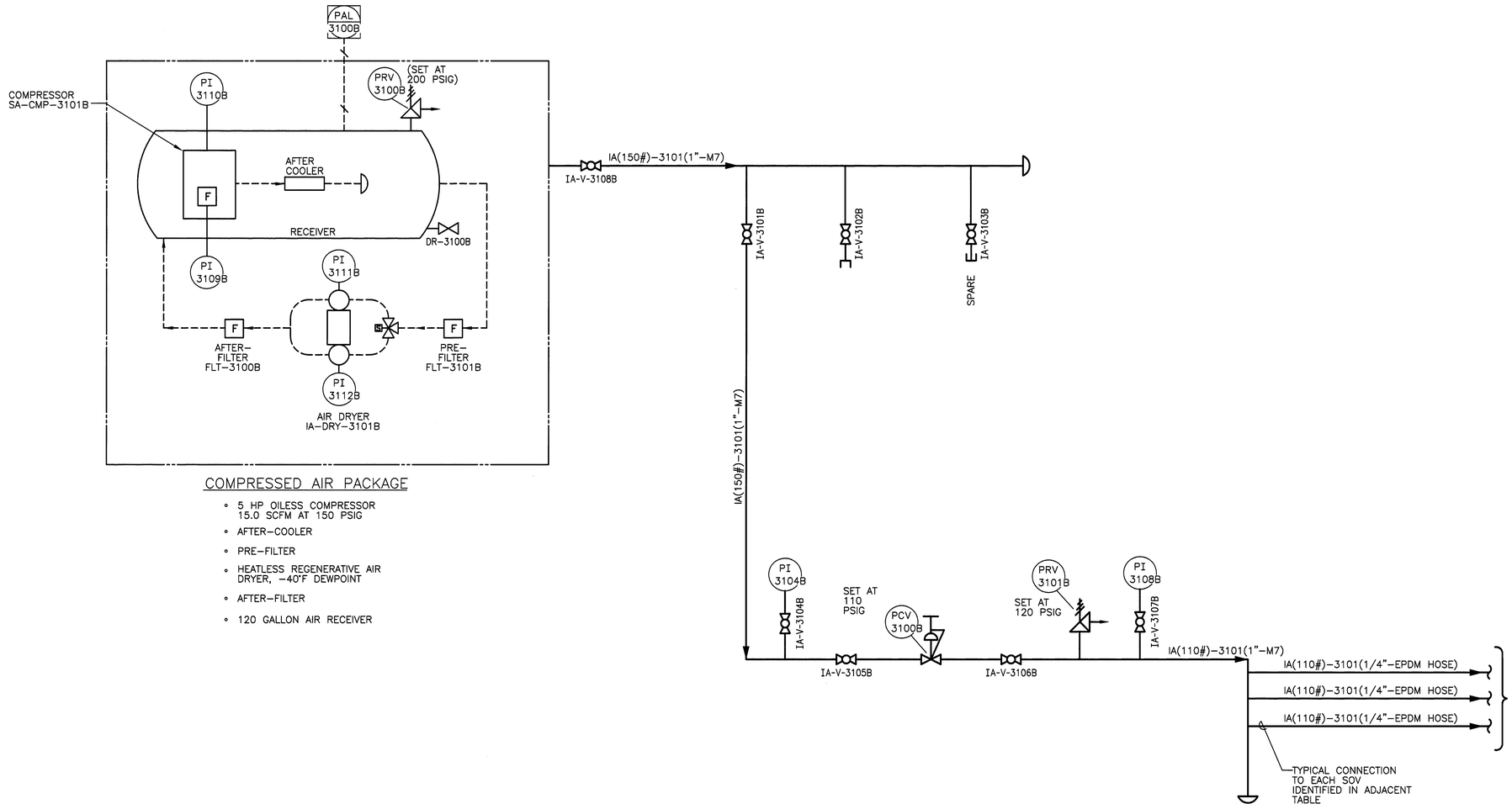

COMPRESSED AIR PACKAGE

- 5 HP OILESS COMPRESSOR 15.0 SCFM AT 150 PSIG
- AFTER-COOLER
- PRE-FILTER
- HEATLESS REGENERATIVE AIR DRYER, -40°F DEWPOINT
- AFTER-FILTER
- 120 GALLON AIR RECEIVER

PISTON OPERATED VALVES (VS-6241-V) H-2-822404

VALVE NO.	POSITION SWITCH/OPEN	POSITION SWITCH/CLOSED
SOV-3165A	ZSH-3165A	ZSL-3165A
SOV-3165B	ZSH-3165B	ZSL-3165B
SOV-3166A	ZSH-3166A	ZSL-3166A
SOV-3166B	ZSH-3166B	ZSL-3166B
SOV-3167A	ZSH-3167A	ZSL-3167A
SOV-3167B	ZSH-3167B	ZSL-3167B
SOV-3168A	ZSH-3168A	ZSL-3168A
SOV-3168B	ZSH-3168B	ZSL-3168B
SOV-3185A	ZSH-3185A	ZSL-3185A
SOV-3185B	ZSH-3185B	ZSL-3185B

(SEE NOTE 2)

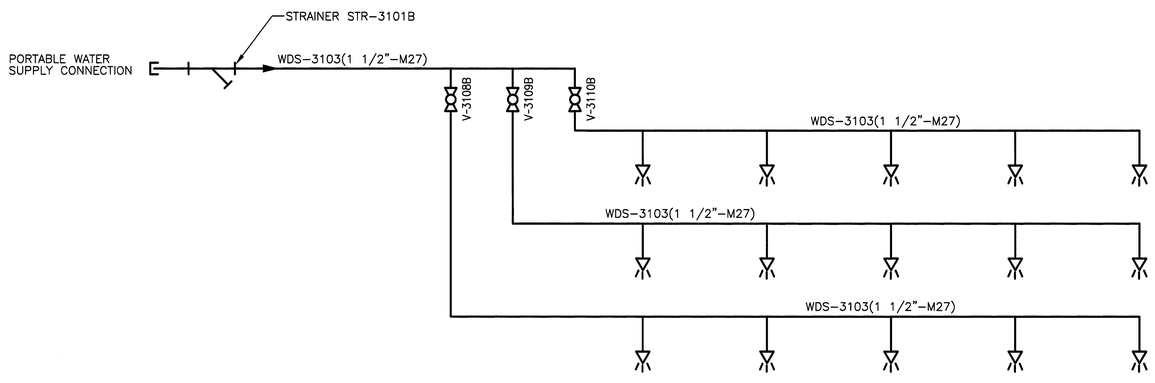

6241-V BLDG LINER WASHDOWN

NOTES:

1. FOR GENERAL NOTES AND SYMBOL LEGEND SEE DRAWING H-14-020000.
2. FOR PISTON OPERATED VALVE DIAGRAM SEE DRAWING H-2-822400.
3. SEE CONSTRUCTION DRAWINGS AND SPECIFICATIONS FOR COMPONENTS SAFETY CLASSES.
4. REVISION 5 OF THIS DRAWING WAS FIELD WALKED DOWN IN NOVEMBER 2010. FOR CHANGES MADE AND FOR ITEMS NOT VERIFIED IN FIELD, SEE ECN-11-000283.

MAR 16 2011 DATE: STA: 4 HANFORD RELEASE ID: 11

DWG NO	TITLE
DRAWING TRACEABILITY LIST	

REF NUMBER	TITLE
H-14-020000	TK FARMS SYS P&ID DWG LEGEND
H-2-822200	DRAWING LIST

REFERENCES

NEXT USED ON H-2-822404

REV NO	DESCRIPTION	REV BY DATE	DRAFTING APPVD	ENGR COMPANY
RS 6	DIRECT REV PER ECN-11-000283	SAM 2/11	RN KYLE	3-11-11 TM BLAAK WRPS

REVISIONS

NAME / DATE / COMPANY — DRAWN BY — SEE REVISION 0 — ENGINEER

U.S. DEPARTMENT OF ENERGY
Office of River Protection

P & ID
INSTRUMENT AIR SYSTEM
VENT STATION 6241-V

SIZE	BLDG NO	INDEX NO	DWG NO	REV
F	6241V	7004	H-2-822407	6

SCALE NONE EDT 612958 SHEET 1 OF 1

11487 DOE_TB_F.DWG (01-01)

DWG NO H-2-822407 SH 1 OF 1 REV 6