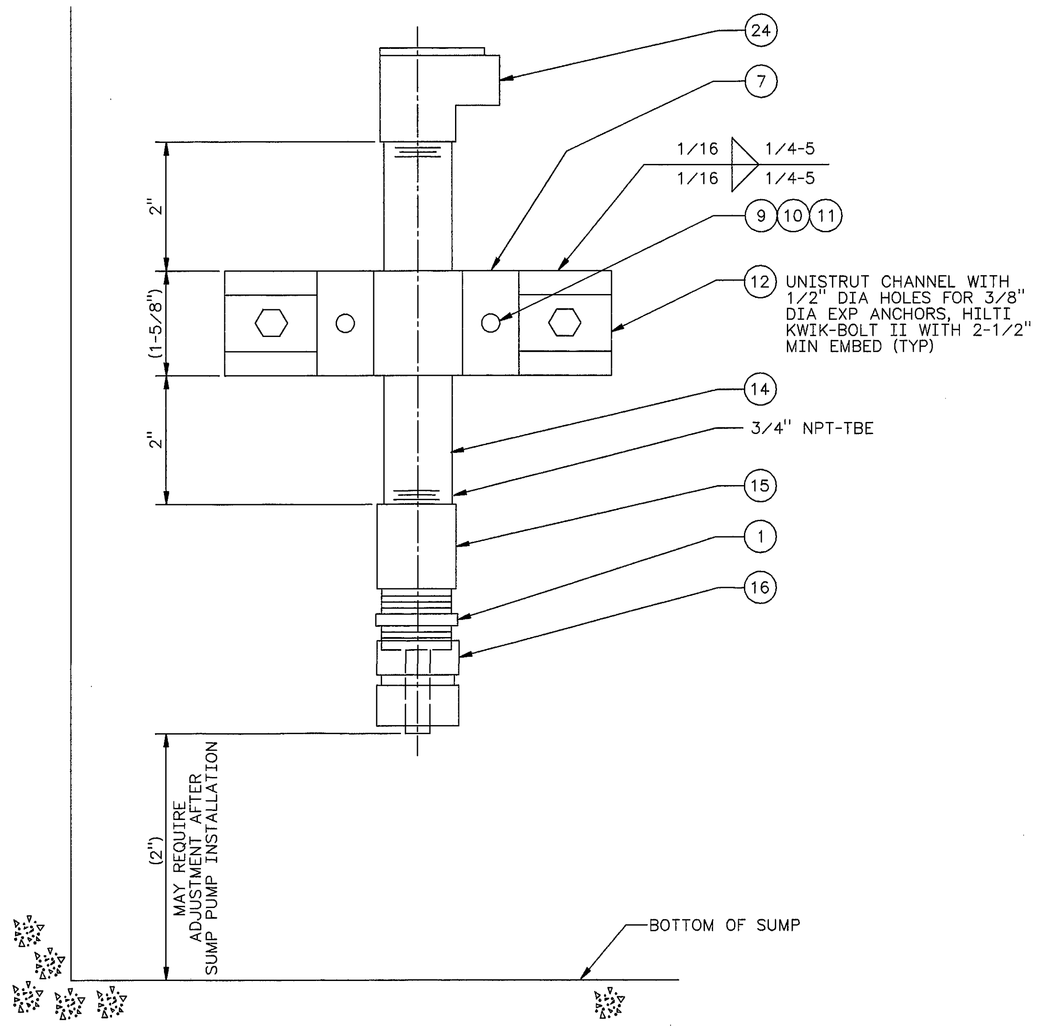

LEAK DETECTION PROBE

SCALE: NONE

4 LDE 3150 & 3150A (SEE H-2-822336, SH 1)
LDE 3151 & 3151A (SEE H-6-13994, SH 1)

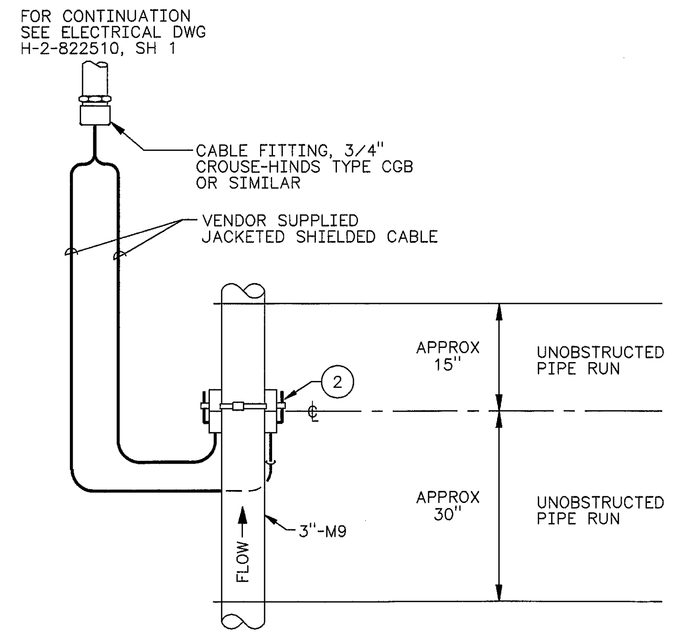

FLOW ELEMENT (SC-3)

SCALE: NONE
FE 3125 (SEE H-2-822336, SH 1)

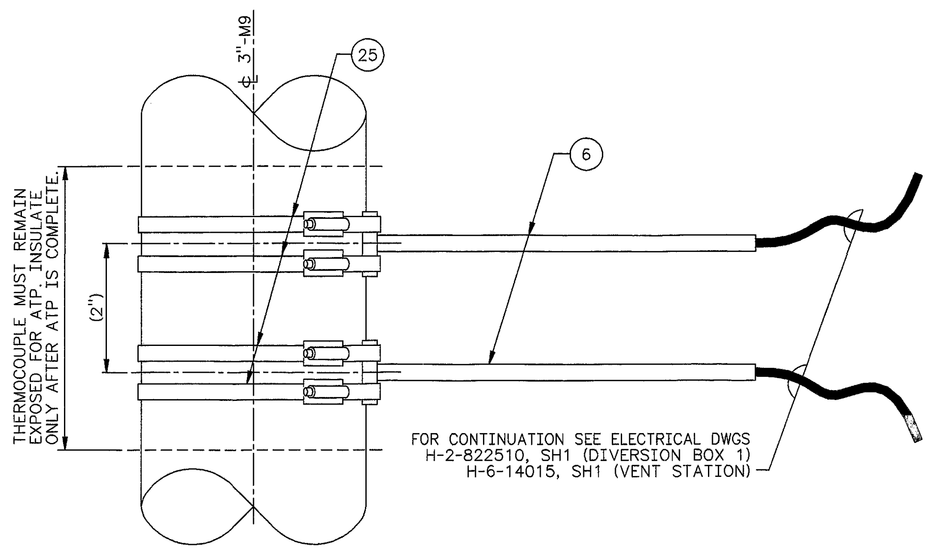

THERMOCOUPLE (SC-3)

SCALE: NONE
TE-3125A & SPARE (SEE H-2-822336, SH 1)
TE-3126A & SPARE (SEE H-6-13994, SH 1)

4

MATERIAL LIST

	QTY	PART NO.	DESCRIPTION	MATERIAL/REF
4	4	1	LEAK DETECTION PROBE	SPEC W-058-C3 DATA SHEET Y-301
	1	2	FLOW ELEMENT	SPEC W-058-P5 DATA SHEET Y-501
4	4	3	LEAK DETECTION RELAY	SPEC W-058-C3 DATA SHEET Y-301
		4	(NOT USED)	
	13	5	PRESSURE TRANSMITTER	SPEC W-058-P5 DATA SHEET Y-503
	4	6	THERMOCOUPLE	SPEC W-058-P5 DATA SHEET Y-502
4	4	7	PIPE CLAMP, 3/4" SST	UNISTRUT #P2558-7
		8	(NOT USED)	
4	8	9	BOLT, HEX HEAD, 1/4" x 3/4", SST	UNISTRUT #HHCS025075EG
4	8	10	NUT, 1/4", WITH SPRING, SST	UNISTRUT #P1006-1420
4	8	11	LOCK WASHER, 1/4", SST	UNISTRUT #HLKW025EG
	AR	12	CHANNEL, 1-5/8" x 1-5/8" x LENGTH AS REQUIRED	UNISTRUT #P1000SS
		13	(NOT USED)	
	AR	14	PIPE, 3/4" SCHED 40	ASTM A312
4	4	15	REDUCING COUPLING, 1" x 3/4", THREADED	ASTM A182
4	4	16	COUPLING, 1", THREADED	ASTM A182
		17	(NOT USED)	
		18	(NOT USED)	
4	4	19	PLATE, 1'-6" x 2'-6" x 10 GAUGE, CS	ASTM A36
4	AR	20	BOLT, HEX HEAD 3/8"-11 UNC-2Ax3/4"LG	ASTM A193 ER B6
4	AR	21	LOCKWASHER, HELICAL SPRING, 3/8", REGULAR, CS	ANSI B18.21.1
4	AR	22	NUT, HEX HEAD, 3/8"-11 UNC-2B	ASTM A194 GR 2
		23	(NOT USED)	
4	4	24	LB FITTING, 3/4" W/COVER & GASKET	COMMERICAL
	8	25	CLAMP, WORM DRIVE ADJUSTABLE, 1/4" WIDE, SST	COMMERICAL
	13	26	1/2" BALL VALVE, 3 PIECE SST BODY, FULL PORT SST BALL, 1/2" MNPT END CONNECTIONS, PEAK SEAT MATERIAL, W/ 1/4" PURGE PORT & CAP	3a WHITEY CO. #SS-63PM8-DPF3-2839 W/ PREINSTALLED PURGE PORT CAP
	11	27	INTEGRALLY REINFORCED BRANCH CONNECTION, 3"x1/2" NPT, CLASS 3000	ASTM A182 GR F 304L
	2	28	INTEGRALLY REINFORCED BRANCH CONNECTION, 1"x1/2" NPT, CLASS 3000	ASTM A182 GR F 304L
	1	29	FLOW METER	SPEC W-058-P5 DATA SHEET Y-501

STATE OF WASHINGTON — MARK A. FRIEDRICH — 32436 — REGISTERED PROFESSIONAL ENGINEER
EXPIRES: 8/31/98

NUMBER	TITLE
DRAWING TRACEABILITY LIST	

NUMBER	TITLE
H-6-13994 SH 1 & 2	PIPING PLAN VENT STATION 6241-V
H-2-88336 SH 1 & 2	PIPING PLAN DIVERSION BOX 6241-A
H-2-822200	DRAWING LIST
REFERENCES	
NEXT USED ON	

MF	REV NO.	DESCRIPTION	REV BY DATE	KEH APPROVALS	APVD FOR IMPL/INC FOR DATE
	4	INCORPORATED ECN W058-379 W-058 PROJECT TURNOVER	JCD 3-13 1998	MAP 4-2-98 / JLD 4/4/98	MKF 4/6/98

REVISIONS

CAD FILE B822420A — CAD CODE 2J:IBM:ACD2:12.0:NN — XREFS N

DESIGNED	JL DEVINE	DATE	9-27 1995
DSGN ENGR	MA FRIEDRICH		9-27 1995
CHECKED	CT INAMINE		9-27 1995
SAFETY	SEE DR/AT FORM		
ENVIR	SEE DR/AT FORM		
QUAL ENGR	SEE DR/AT FORM		
LEAD ENGR	MA FRIEDRICH		9-27 1995
REVIEW NO.	13		9-25 1995

APPROVED FOR IMPLEMENTATION BY C. VAN KATWIJK FOR WHC DATE 10-13-95

USE CONSTRUCTION
SAFETY CLASS 2 EXCEPT AS NOTED — EDT 612958

U.S. DEPARTMENT OF ENERGY
RICHLAND OPERATIONS OFFICE
ICF KAISER HANFORD COMPANY

INSTM
INSTALLATION DETAILS

PROJECT W058 REPLACEMENT OF CROSS SITE TRANSFER SYSTEM

SIZE	BLDG NO.	INDEX NO.	DWG NO.	REV NO.
F	6241-A 6241-V	5901	H-2-822420	4

SCALE SHOWN — JOB NO. CR1320 — SHEET 1 OF 2

PLOT SCALE: 1=1 — KEHCAD

KEH 0350.00 (03/94)
STRTKEHF: 199403030900