FUSE TABLE			
LABEL	MODULE	FUSE	AMPS
C6	CI840	FU1	2AMP
C6-2	AI810	FU2	1AMP
C6-3	DI810	FU3	1AMP
FO1	PFCA	FU4	5AMP
FO2	PFCB	FU5	5AMP
SPARE	--	FU6	1AMP
SPARE	--	FU7	--

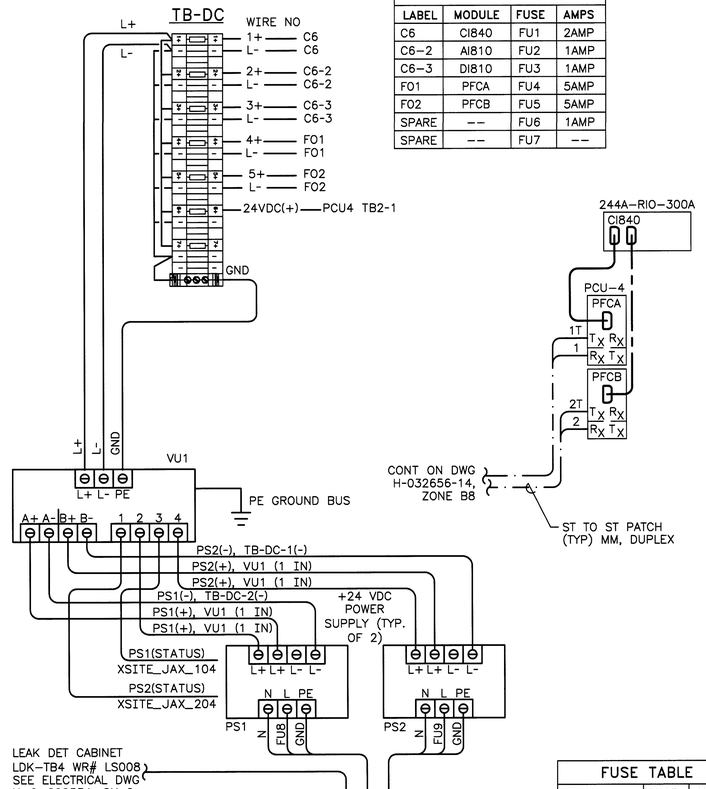

FUSE TABLE		
TB-AC	FUSE	AMPS
PS1	FU8	5AMP
PS2	FU9	5AMP
LDE-3163	FU10	2AMP
PPA-9H1	FU11	1AMP
LS-1	FU12	5AMP

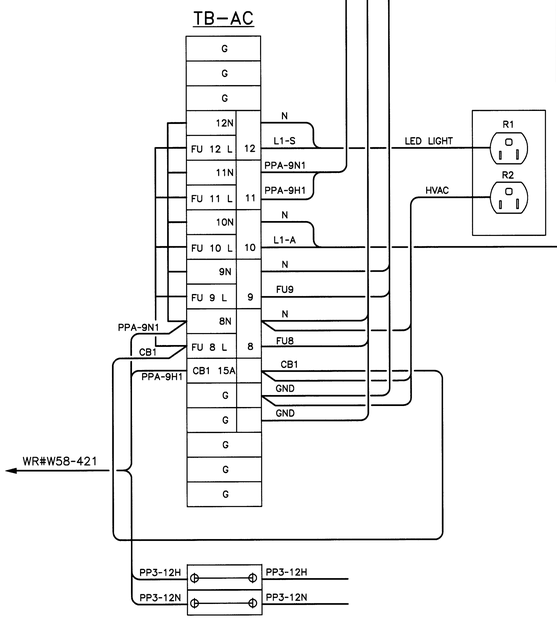

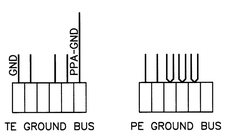

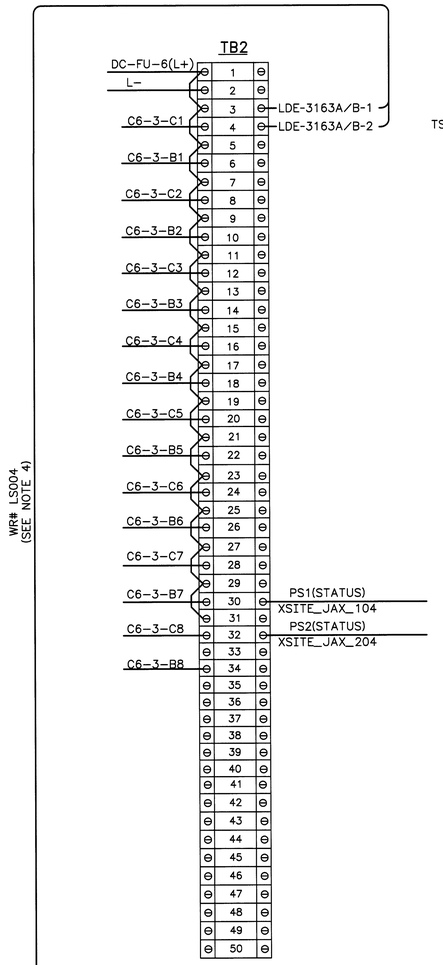

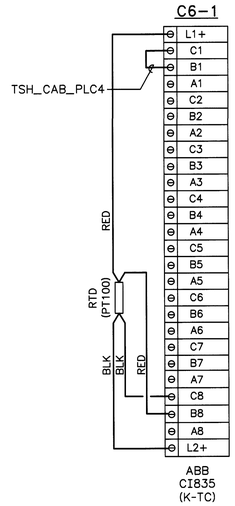

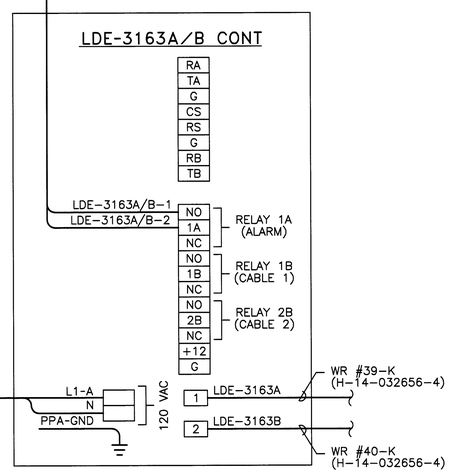

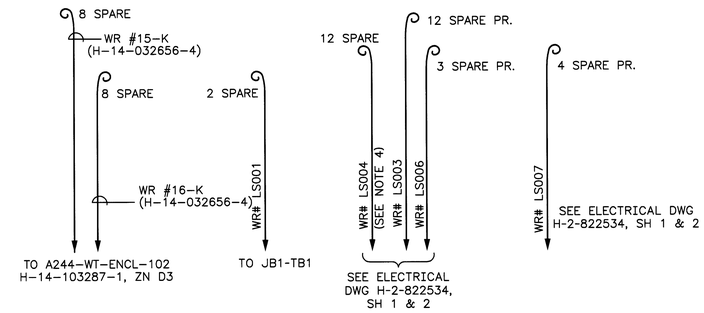

NOTES

1. ALL HOT JUMPERS ARE TO BE BLACK, ALL NEUTRAL JUMPERS ARE TO BE WHITE AND ALL GROUND JUMPERS ARE TO BE GREEN.
2. SEE H-2-822534, SH 1 FOR A244-EDS-DP-101 (PANELBOARD "A") LOCATION.
3. DO NOT INSTALL MORE THAN TWO WIRES ON A TERMINAL.
4. CONNECT GROUND WIRE TO PANEL GROUND.
5. (NOTE DELETED)
6. PCU VENDOR TO INSTALL AND WIRE POTTER & BRUMFIELD RELAY NO. KRPA-14AG-120 AND SOCKET NO. 27E123.
7. WIRE THERMOCOUPLE WIRES DIRECTLY TO ABB MODULE.
8. ALL 24 VDC POWER SUPPLY WIRING TO BE #14 AWG THHN, 600V, 90°C, STRANDED COPPER WIRE.
9. ADD RELAY (KMS-244A-1) TO PCU-4 CABINET. POTTER & BRUMFIELD RELAY NO KRPA-14AG-120, SOCKET NO 27E123. WIRE THE NORMALLY OPEN CONTACT (PT 1 AND PT 3) AS SHOWN ON DRAWING USING #14 AWG THHN WIRE.
10. (NOTE DELETED)
11. ADD FUSE HOLDER F14, ALLEN BRADLEY MODEL NO. 1492-H4.

LEGEND:

- 120 VAC WIRING
- 24 VDC WIRING
- FIBER OPTIC
- PROFIBUS DATA CABLE
- CAT5e DATA CABLE

JAN 12 2012 DATE: STA: 4 HANFORD RELEASE ID: 17

SUPERSEDES DWG
H-14-101296-12, REV 1

DRAWING TRACEABILITY LIST		REFERENCES	
DWG NO	TITLE	REF NUMBER	TITLE
		H-2-822200	DRAWING LIST
		NEXT USED ON	

REVISIONS					
MFD REV REL	REV NO	DESCRIPTION	REV BY DATE	DRAFTING APRVD	ENGR COMPANY
RS 10		INC ECN-11-000428, ECN-11-000886, ECN-725209-R0, ECN-10-000651 AND DIRECT REV PER ECN-11-001346	MJC 11/11	RN KOLE 12/12	KJ HULL WRPS

	NAME	DATE	COMPANY
DRAWN BY	SEE REVISION 0		
ENGINEER			

U.S. DEPARTMENT OF ENERGY
Office of River Protection

INSTRUMENTATION TERMINATION DIAGRAM PCU-4

SIZE	BLDG NO	INDEX NO	DWG NO	REV
F	244A	7504	H-2-822433	10
SCALE NONE	EDT CR1320		SHEET 1 OF 1	

11766 DOE_TB_F.DWG (01-01)

DWG NO H-2-822433 SH 1 OF 1 REV 10