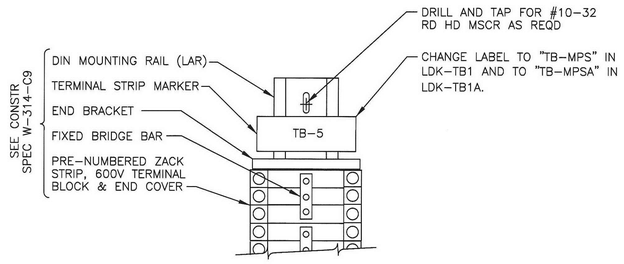


4 DETAIL
SCALE: NONE

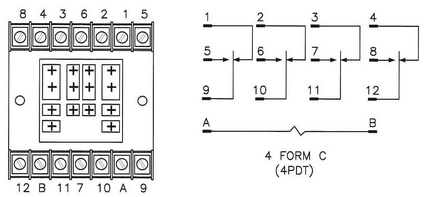


POTTER & BRUMFIELD RELAY NO. KUP-17A19-120,
SOCKET NO. 27E867

3 RELAY K-PS-3113/3113A WIRING DETAIL
SCALE: NONE

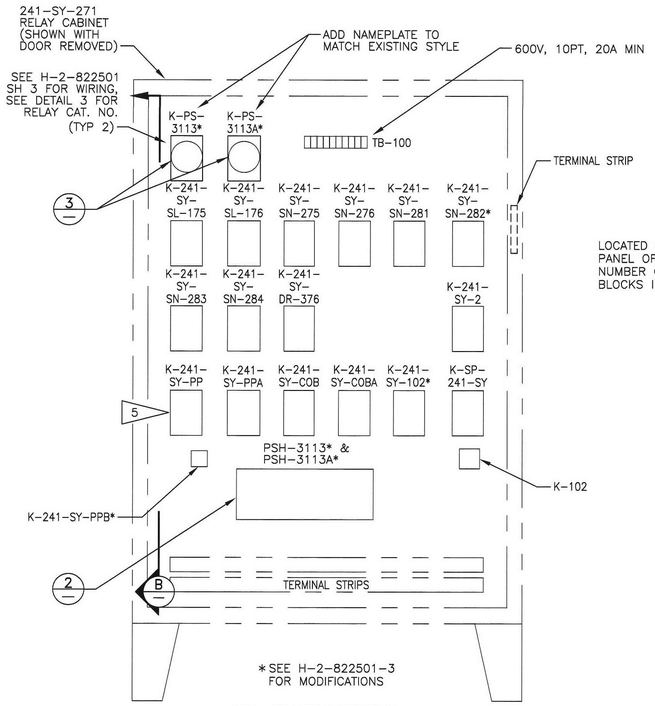


A ELEVATION
H-2-822501-1 SCALE: NONE

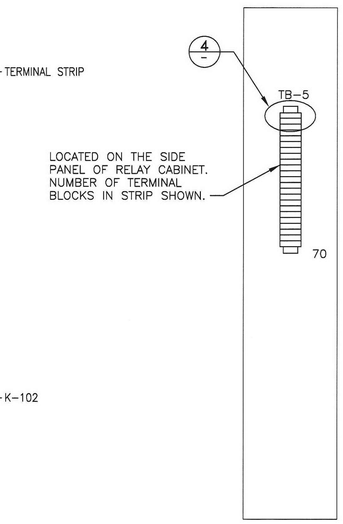


B SECTION
SCALE: NONE

## LEGEND

- ⊤ LOCATED IN RELAY CABINET IN INSTRUMENT BLDG 241-SY-271
- □ LOCATED IN VAULT PIT 241-SY-A.
- ◇ LOCATED IN RELAY CABINET LDK-TB1 IN INSTRUMENT BLDG 241-SY-271 SEE DRAWING H-2-822501.
- △ LOCATED IN PCU-1 IN BLDG 252-S
- ◆ LOCATED IN RELAY CABINET LDK-TB1A IN INSTRUMENT BLDG 241-S7-271 SEE DRAWING H-2-822501.
- ◨ LOCATED IN SY252-WT-ENCL-106 RELAY ENCLOSURE INSIDE BLDG 252-S
- ■ LOCATED IN SY241-WT-ENCL-105 RELAY ENCLOSURE OUTSIDE BLDG 252-S
- ♦ LOCATED IN SY241-WT-ENCL-111 (NEAR PLC CABINET SY241-WT-ENCL-107)

## NOTES:

1. INSTALL RELAY K-6241 TO RELAY CABINET 241-SY-271 AS SHOWN IN ELEVATION A. WIRE K-6241 COIL AS SHOWN ON THE ELEMENTARY DIAGRAM. USE #12 AWG THWN WIRE.
2. DELETED
3. LEAK DETECTED IN CROSS SITE TRANSFER LINE.
4. INSTALL CHANNEL TRACK TO RELAY CABINET WITH SELF-TAPPING SCREWS.
5. B/W INDUCTION TYPE CONTROL RELAY, MODEL 1500-A-L2-S3-OC-X.
6. DELETED
7. REVISION 5 OF THIS DRAWING WAS FIELD WALKED DOWN IN APRIL 2011. FOR CHANGES MADE AND FOR ITEMS NOT VERIFIED IN FIELD, SEE ECN-11-000769.

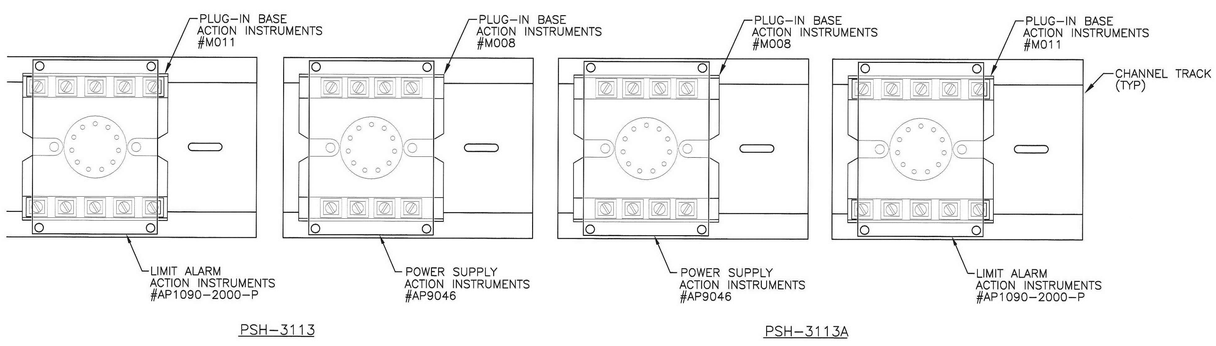


2 PSH-3113 & PSH-3113A DETAIL
SCALE: NONE
SEE NOTE 4 – FOR WIRING DIAGRAM SEE H-2-822501, SH 3

SUPERCEDES DRAWING
H-14-101302-2 REV 3

AUG 11 2011
DATE:
STA: 4
HANFORD RELEASE
ID: 58

| DWG NO | TITLE |
|---|---|
| H-14-101309 SH 3 | INSTM INTCOM DIAGRAM RELAY ENCLOSURE |
| H-2-822501 SH 3 | INSTR BLDG WIRING DIAGRAM |
| H-2-37735 | ELEC ELEM DIAGRAMS |
| H-7-1275 | SYMBOL LIST |
| H-2-822200 | DRAWING LIST |

DRAWING TRACEABILITY LIST

| REF NUMBER | TITLE |
|---|---|
| | REFERENCES |
| NEXT USED ON | |

| REV NO | DESCRIPTION | REV BY DATE | DRAFTING APPRO | ENGR COMPANY |
|---|---|---|---|---|
| 6 | INC ECN-724729-R0, ECN-W314-A5-003-R1 AND DIRECT REV PER ECN-11-000769 | DAM 08/01/11 | RW KYLE RWK 8/11 | WRPS |

REVISIONS

| NAME | DATE | COMPANY |
|---|---|---|
| DRAWN BY | | |
| SEE REVISION 0 | | |
| ENGINEER | | |

U.S. DEPARTMENT OF ENERGY
Office of River Protection

INSTRUMENTATION RELAY CABINET ELEV & DETAIL

| SIZE | BLDG NO | INDEX NO | DWG NO | REV |
|---|---|---|---|---|
| F | 241SY271 | 5901 | H-2-822440 | 6 |

SCALE AS SHOWN | EDT 612961 | SHEET 1 OF 2

14448

DOE_TB_F.DWG (01-01)

DWG NO H-2-822440 SH 1 OF 2 REV 6