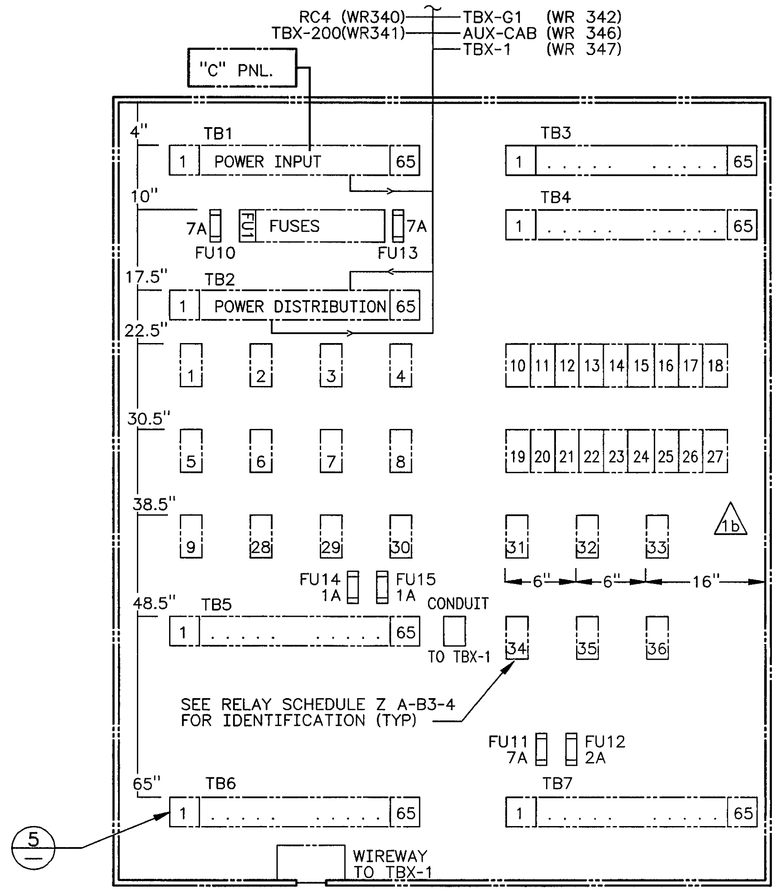

1 SH1 RC-1 ARRANGEMENT
SCALE: NONE

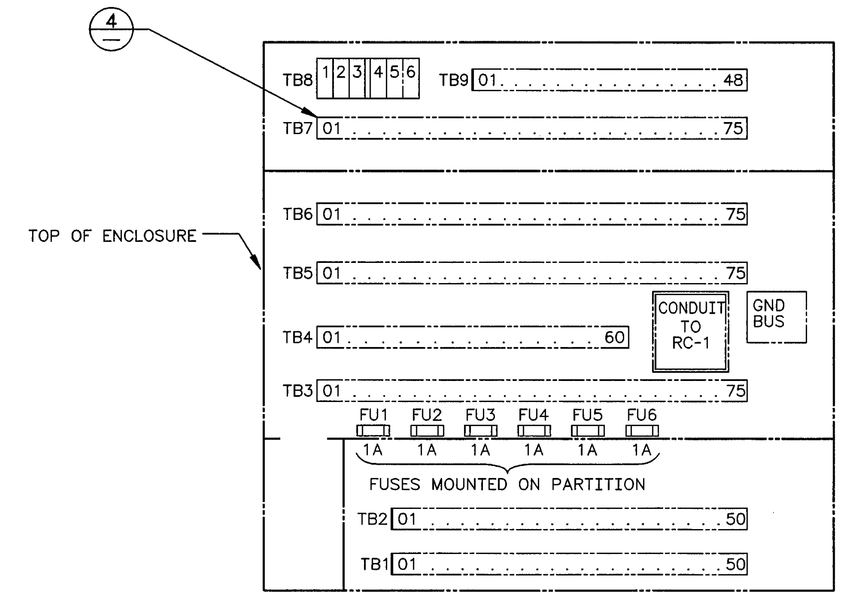

3 TBX-1 ARRANGEMENT
SCALE: NONE

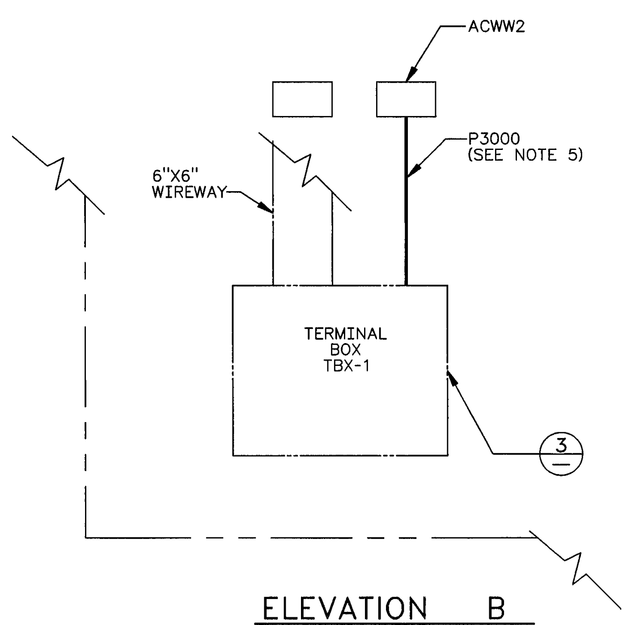

ELEVATION B
SCALE: NONE

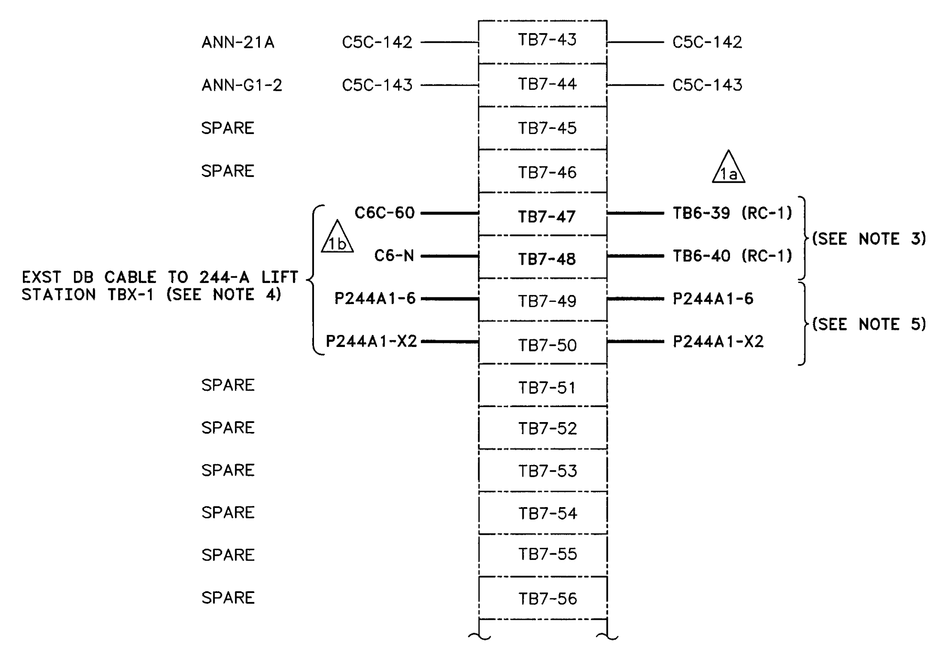

4 TB7 ARRANGEMENT (TBX-1)
SCALE: NONE

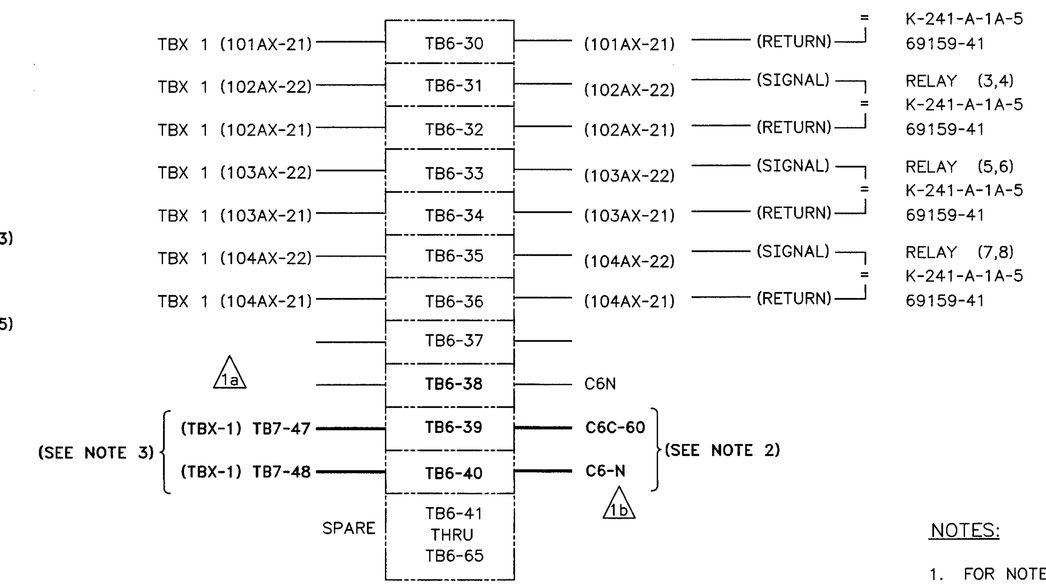

5 TB6 ARRANGEMENT (RC-1)
SCALE: NONE

NOTES:

1. FOR NOTES SEE SHEET 1.

EXPIRES 05/30/99

NUMBER	TITLE
DRAWING TRACEABILITY LIST	

NUMBER	TITLE
NEXT USED ON	REFERENCES

MF	REV NO.	DESCRIPTION	REV BY DATE	KEH APPROVALS	APVD FOR IMPL/INC FOR DATE
S	1	b) INC ECN W-058-329 a) INC ECN W-058-313 W-058 PROJECT TURNOVER	CLC 8-13 1997	mcb	11/14/97

REVISIONS

CAD FILE B822441B CAD CODE 2J:IBM:ACD2:12.0:NN XREF'S N

		DATE
DESIGNED	BJ GRAF	
DSGN ENGR	BRAD GRAF	8-24 1995
CHECKED	CT INAMINE	8-24 1995
SAFETY	SEE DR/AT FORM	
ENVIR	SEE DR/AT FORM	
QUAL ENGR	SEE DR/AT FORM	
LEAD ENGR	ML ALEXANDER	8-29 1995
REVIEW NO.	7	7-13 1995

APPROVED FOR IMPLEMENTATION BY C VAN KATWIJK FOR WHC DATE 8-30-95

SAFETY CLASS 3 | USE CONSTRUCTION | EDT 612961

U.S. DEPARTMENT OF ENERGY
RICHLAND OPERATIONS OFFICE
ICF KAISER HANFORD COMPANY

ELECTRICAL
PLAN, ELEV, DET & ELEC DIAG
RC-1 & TBX-1 ARRANGEMENTS

PROJECT W-058 REPLACEMENT OF CROSS-SITE TRANSFER SYSTEM

SIZE	BLDG NO.	INDEX NO.	DWG NO.	REV NO.
F	242-A	5803 5807	H-2-822441	1

SCALE SHOWN | JOB NO. CR1320 | SHEET 2 OF 2

PLOT SCALE: 1=1 | KEHCAD 1 | KEH 0350.00 (03/94) STRTKEHF: 19940303.0900