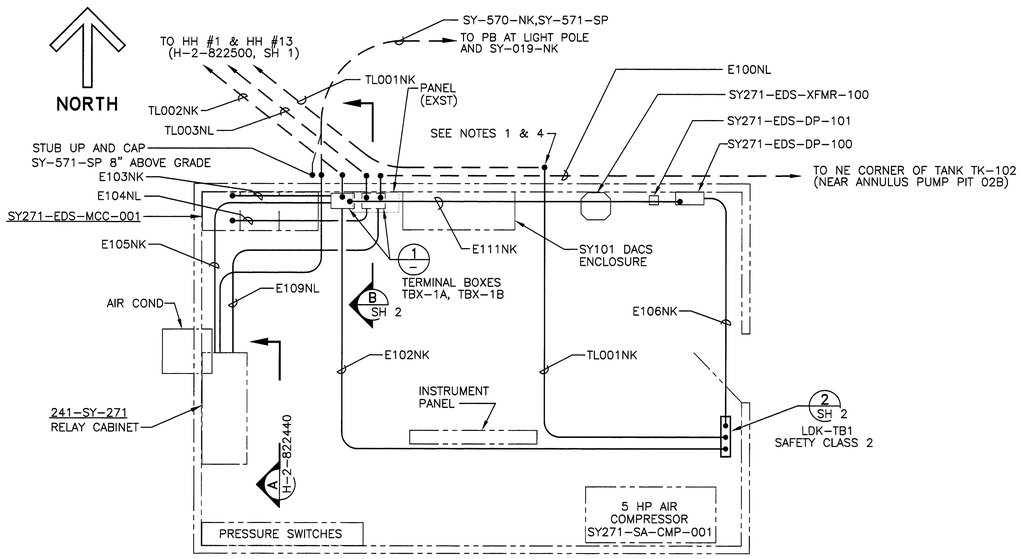

ENLARGED PLAN "A"
INSTRUMENT HOUSE 241-SY-271
SCALE: NONE

WIRE RUN LIST

WIRE RUN NUMBER	NO. OF WIRES	TYPE	FROM	VIA	TO	WIRE NUMBERS
IH001	3 PR	#16 AWG (B)	252S BLDG PCU 1	TL012NL, HH#1, TL003NL	TBX-1B	IY-P102SY-02A(-), PS1(+), SH, 2 SP PR *
IH002	3 C	#14 AWG (A)	TBX-1A	E111NK	SY271-EDS-DP-100	B26-H, B26-N, GND
IH003	3/C	#14 AWG (A)	TBX-1A	E105NK	RELAY CAB	K-6241-1, -4, 1SP
IH004	1-12/C	#14 AWG (C)	SY271-EDS-MCC-001 MAST TERM STRIP	E103NK	TBX-1A	A3-6, -6B, -10, -X2, -11, -6C, -5, GND, 2 SP
IH005	1-16/C	#14 AWG (C)	TBX-1A	TL002NK, HH#1, TL011NK	252S BLDG PCU1	K-6241-1, -3, -6C, -8, -6A, -6B, -10, -X2, -X2, -11, PCU1-1, -2, GND, 3 SP *
IH006	3 PR	#16 AWG (B)	SY271-EDS-MCC-001 SECTION A-3	E104NL	TBX-1B	IY-P102SY-02A(-), PS1(+), SH, 2 SP PR
IH007	3/C	#14 AWG (C)	TBX-1A	E105NK	RELAY CAB	K-DB-1-2, PCU1-1, GND
IH008	6/C	#12AWG (C)	TBX-1A	E105NK	RELAY CAB	A3-6B, A3-6C, K-PS-3113-12, K-PS-3113A-8, 2SP
IH009	1-12/C	#14 AWG (C)	TBX-1A	E102NK	LDK-TB1	K-VS-1-1, -2, K-DB-1-1, -2, GND, 7 SP
IH010	1-12/C	#14 AWG (C)	JB1 AT VALVE PIT A	E101NK, UTILITY TRENCH, E110NK, JB-SY-500, SY-322-NE, JB-SY-320, E107NK, HH#1, TL002NK	TBX-1A	ZSH-223-1, ZSH-223-2, GND, ZSH-221-1, ZSH-221-2, ANN-102-8, ANN-102-8A, B26-H, B26-N, 3 SP
IH011	1-7/C	#14 AWG (C)	JB2 AT VALVE PIT B	E108NK, UTILITY TRENCH, E110NK, JB-SY-500, SY-322-NE, JB-SY-320, E107NK, HH#1, TL002NK	TBX-1A	K-LK-365-6, K-LK-365-9, K-PS-3113-12, K-PS-3113A-8, 3SP
IH012	3/C	#12 AWG (A)	PANELBOARD SY271-EDS-DP-100	E106NK	LDK-TB1	EDS-DP-3101-20H, -20N, GND
IH013	3 PR	#16 AWG (B)	JB1 AT VALVE PIT A	E101NK, UTILITY TRENCH, E110NK, JB-SY-500, SY-322-NE, JB-SY-320, E107NK, HH#1, TL003NL	TBX-1B	PT3113(+), (-), SH; PT3113A(+), (-), SH; 1PR SP
IH014	3 PR	#16 AWG (B)	TBX-1B	E109NL	RELAY CAB	PT3113(+), (-), SH; PT3113A(+), (-), SH; 1PR SP
IH015	4 C	#14 AWG (A)	TBX-1A	E105-NK	RELAY CAB	ANN-102-8, ANN-102-8A, ZSH-221-1, ZSH-221-2

(A) TYPE TC THHN/THWN INSULATION - PVC JACKET, COPPER CONDUCTORS, 600 VOLT, 90? C,

(B) TYPE TC PVC INSULATION, MULTIPLE INDIVIDUAL SHIELDED PAIRS WITH OVERALL SHIELD, 600 VOLT, 90? C, PVC JACKET

(C) TYPE THHN/THWN/XHHW-COPPER CONDUCTORS, 600 VOLT, 90° C

* (SEE NOTE 3)

NAMEPLATE LEGEND

NAMEPLATE DESIGNATER	ENGRAVING		
	FIRST LINE	SECOND LINE	THIRD LINE
A	TERMINAL BOX	TBX-1A	——
B	TERMINAL BOX	TBX-1B	——
C	LDK-TB1	——	——
D	K-VS-1	——	——
E	K-DB-1	——	——
F	SPARE	——	——
G	LDK-TB1A	——	——
H	K-VS-1A	——	——
I	K-DB-1A	——	——
J	SPARE	——	——

CONDUIT SCHEDULE

	CND NUM	CND SIZE	WIRE RUN NUMBERS
	E100NL	3/4"	
	E101NK	2"	IH010, IH013
**	E102NK	1"	IH009
	E103NK	1-1/2"	IH004
	E104NL	3/4"	IH006
	E105NK	1"	IH003, IH007, IH008, IH015, HMS-301
**	E106NK	3/4"	IH012
	E107NK	2"	IH010, IH011, IH013
	E108NK	2"	IH011
**	TL001NK	1-1/2"	W58-481, W58-483
	TL002NK	1-1/2"	IH005, IH010, IH011
	TL003NL	1-1/2"	IH001, IH013
	E109NL	3/4"	IH014
	E110NK	1-1/2"	IH010, IH011, IH013
	E111NK	3/4"	IH002

** (SEE NOTE 6)

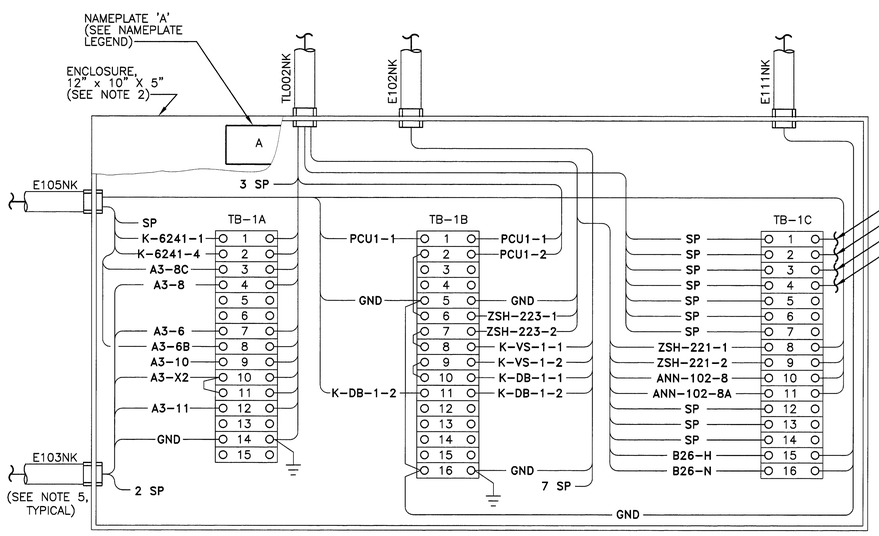

TERMINAL BOX TBX-1A

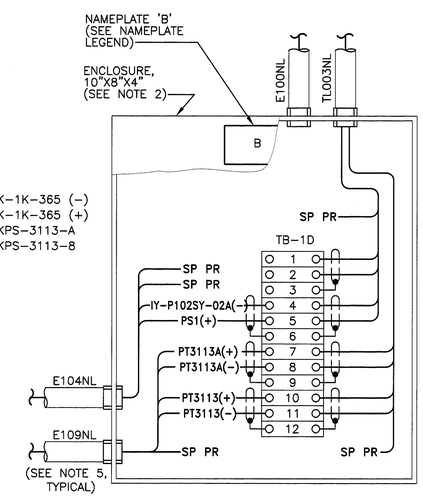

TERMINAL BOX TBX-1B

NOTES:

1. ROUTE CONDUIT UP OUTSIDE WALL, PENETRATE WALL WITH LB CONDUIT BODY AND INSTALL EXPOSED CONDUIT TO LDK-TB1.
2. TERMINAL BOX TBX-1A SHALL BE NEMA 12, FURNISHED WITH A BRACKET ASSEMBLY AND TERMINAL BLOCK STRIPS, HOFFMAN CATALOG NUMBERS A-1210CHQR, A-10JTMA, A-12JBNS (3 EA) OR APPROVED SUBSTITUTE.

   TERMINAL BOX TBX-1B SHALL BE NEMA 12, FURNISHED WITH A BRACKET ASSEMBLY AND A TERMINAL BLOCK STRIP, HOFFMAN CATALOG NUMBERS A-1008CHQR, A-8JTMA, A-10JBNS OR APPROVED SUBSTITUTE.
3. SEE H-2-822430 FOR PCU-1 CABLE TERMINATION.
4. ATTACH STRUT/CHANNEL FOR BOXES AND CND TO WALL(S) WITH 1/2" MIN BOLTS. SEAL PENETRATIONS PER SPECIFICATION W-058-C2.
5. CONDUIT ENTRY LOCATION IS SHOWN FOR CLARITY, FIELD CONDITIONS WILL DICTATE ACTUAL POINTS OF ENTRY.
6. INSTALL LIQUIDTIGHT METAL CONDUIT LENGTH BEFORE ENTERING LDK-TB1.
7. FOR JUMPERS USE #12AWG THWN WIRE.
8. DELETED
9. USE EXISTING SPARE TERMINALS OR INSTALL NEW TERMINALS IN LDK-TB1 AND LDK-TB1A AS REQUIRED TO REDUCE QUANTITY OF WIRE TERMINATIONS ON ANY TERMINAL TO TWO OR LESS.
10. REVISION 5 OF THIS DRAWING WAS FIELD WALKED DOWN IN MARCH 2010. FOR CHANGES MADE TO THIS DRAWING AND FOR ITEMS NOT FIELD VERIFIED SEE ECN-727425-R0.

1 DETAIL
SCALE : NONE

DEC 2 9 2010 DATE: STA: 4 HANFORD RELEASE ID: 17

DWG NO	TITLE
H-14-101302-1	PLAN & DET INSTR BLDG
H-14-101170-8	ELEC PWR & CTRL MPS DETAILS
H-14-101170-3	ELEC PWR & CTRL MPS PLAN
H-2-822440	INSTM RELAY CABINET
H-2-822200	DRAWING LIST

DRAWING TRACEABILITY LIST — REF NUMBER / TITLE / REFERENCES / NEXT USED ON

REV NO	DESCRIPTION	REV BY DATE	DRAFTING APRVD	ENGR
6	REVISED PER ECN-675441, 724729-R0, DIRECT REV PER ECN-727425-R0	DFT 03/10 BN KYLE		RL ENGR MPS

REVISIONS

DRAWN BY — NAME / DATE / COMPANY — SEE REVISION 0

ENGINEER

U.S. DEPARTMENT OF ENERGY
Office of River Protection

ELEC
INSTR BLDG
PLAN & WIRING DIAG

SIZE F | BLDG NO 241SY271 | INDEX NO 7501 7505 | DWG NO H-2-822501 | REV 6
SCALE NONE | EDT 612961 | SHEET 1 OF 3

12/20/2010 8:16:20 AM H-2-822501-1 DOE_TB_F.DWG (01-01)

DWG NO H-2-822501 SH 1 OF 3 REV 6