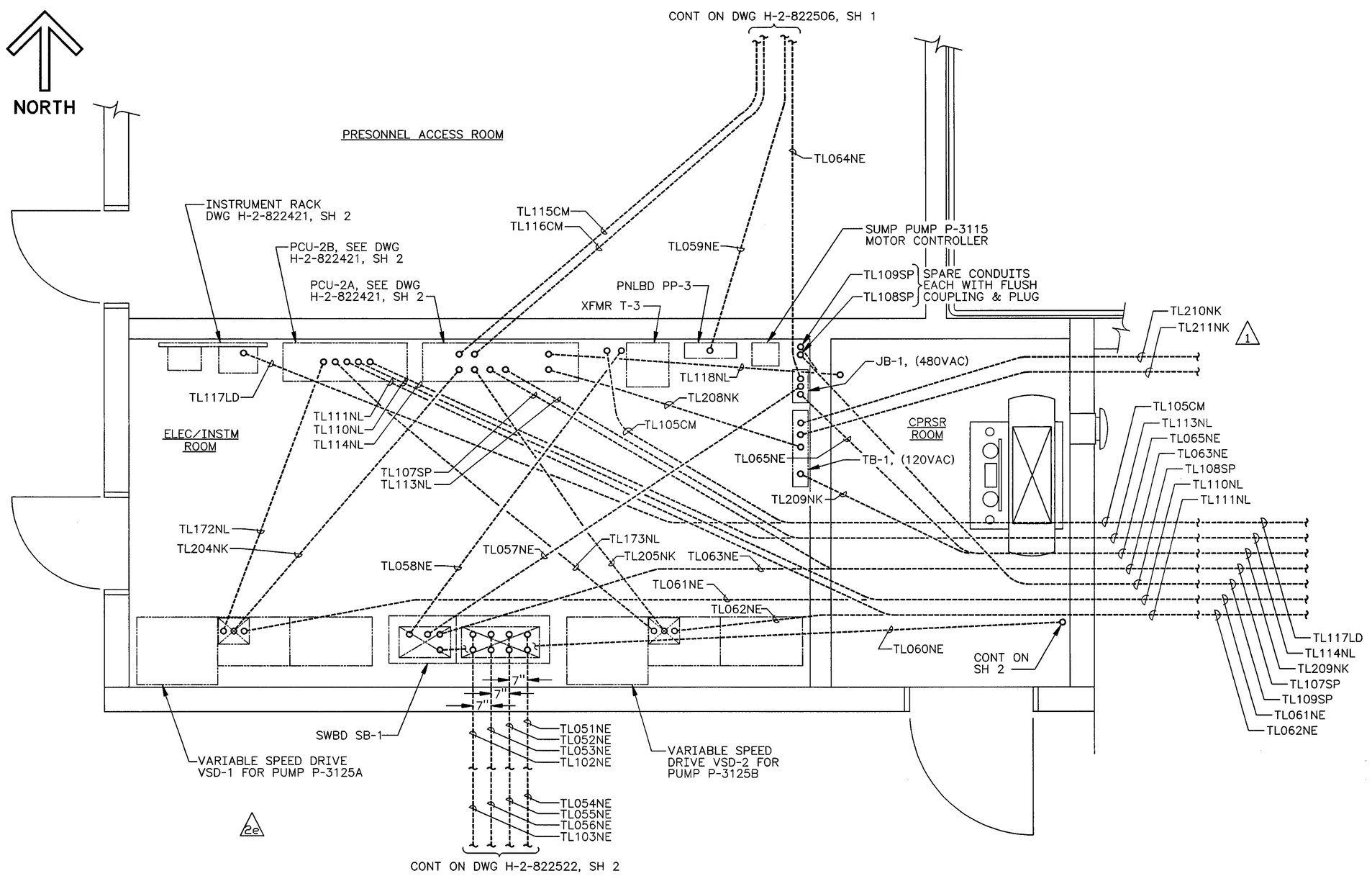

1 ENLARGED PLAN
H-2-822506, SH 1 SCALE: $\frac{1}{2}$" = 1'-0"

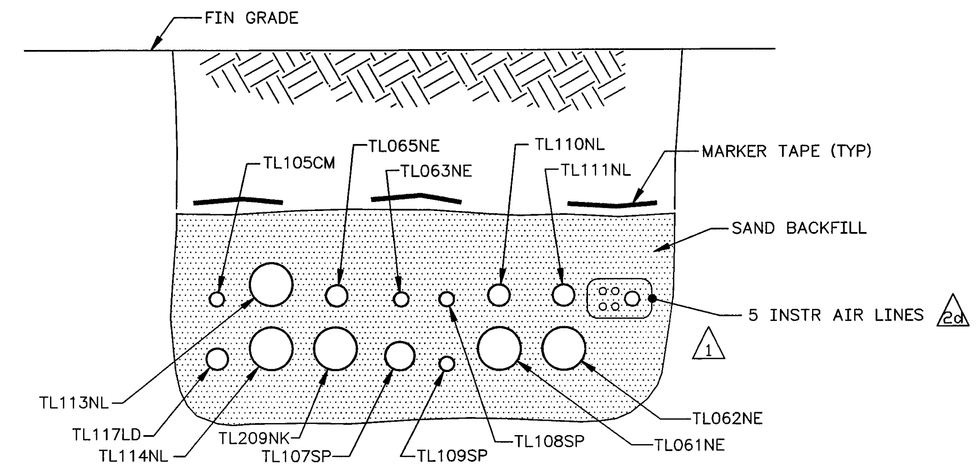

B SECTION
SCALE: NONE

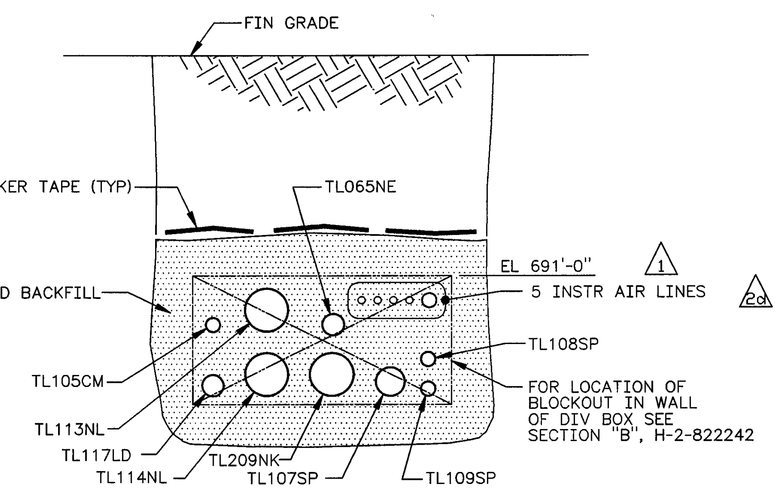

C SECTION
SCALE: NONE

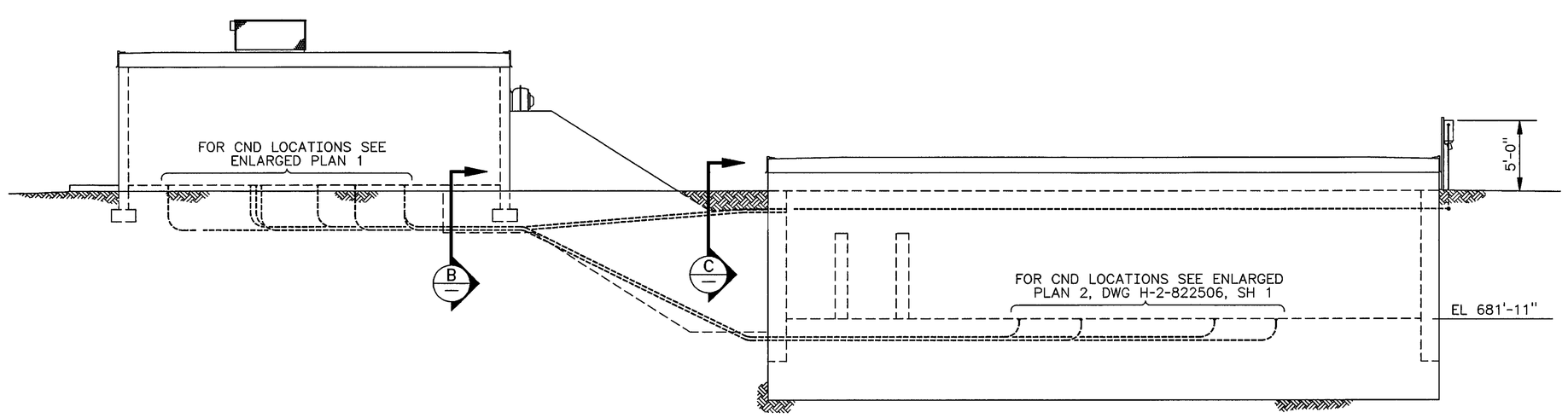

A SECTION
H-2-822506, SH1 SCALE: NONE

SEE DWG H-2-822506, SH 1 FOR NOTES.

GREGORY P. McDONALD, STATE OF WASHINGTON, 20372, REGISTERED PROFESSIONAL ENGINEER

NUMBER	TITLE
DRAWING TRACEABILITY LIST	

NUMBER	TITLE
H-2-822200	DRAWING LIST
NEXT USED ON	REFERENCES

MF	REV NO.	DESCRIPTION	REV BY DATE	KEH APPROVALS			APV'D FOR IMPL/INC FOR DATE
S	2	e) INC ECN W-058-339 d) INC ECN W-058-209 c) INC ECN W-058-133 b) INC ECN W-058-118 a) INC ECN W-058-87 W-058 PROJECT TURNOVER	CLC 8-13 1997	mk		mk	MLP 11/21/97
M	1	GENERAL REVISION ECN W-058-34	GJK 2/8 1996	ARS 3/01 1996		MLA 3/13 1996	CVK 3/13 1996

REVISIONS

CAD FILE B822507A CAD CODE 2J:IBM:ACD2:12.0:NN XREF'S N

EXPIRES 05/30/99

DESIGNED	GJ KUBINSKI	DATE	
DSGN ENGR	ML ALEXANDER	9/29 1995	
CHECKED	AR SNOWHITE	9/29 1995	
SAFETY	SEE DR/AT FORM		
DRVER	SEE DR/AT FORM		
QUAL ENGR	SEE DR/AT FORM		
LEAD ENGR	ML ALEXANDER	9/29 1995	
REVIEW NO.	5	9/7 1995	
APPROVED FOR IMPLEMENTATION BY	C VAN KATWIJK		
FOR	WHC	DATE	10/12/95

SAFETY CLASS 3 EDT 612958 USE CONSTRUCTION

M U.S. DEPARTMENT OF ENERGY
RICHLAND OPERATIONS OFFICE
ICF KAISER HANFORD COMPANY

ELECTRICAL
PLAN & SECTIONS
DIVERSION BOX 6241-A

PROJECT W058, REPLACEMENT OF CROSS-SITE TRANSFER SYSTEM

SIZE	BLDG NO.	PROC. NO.	DWG NO.	REV NO.
F	6241-A	7501 7301 7501	H-2-822507	2

SCALE SHOWN JOB NO. CR1320 SHEET 1 OF 2

PLOT SCALE: 1=48 KEHCAD

KEH 0350.00 (03/94)
STRTKEHF: 199403030.0900