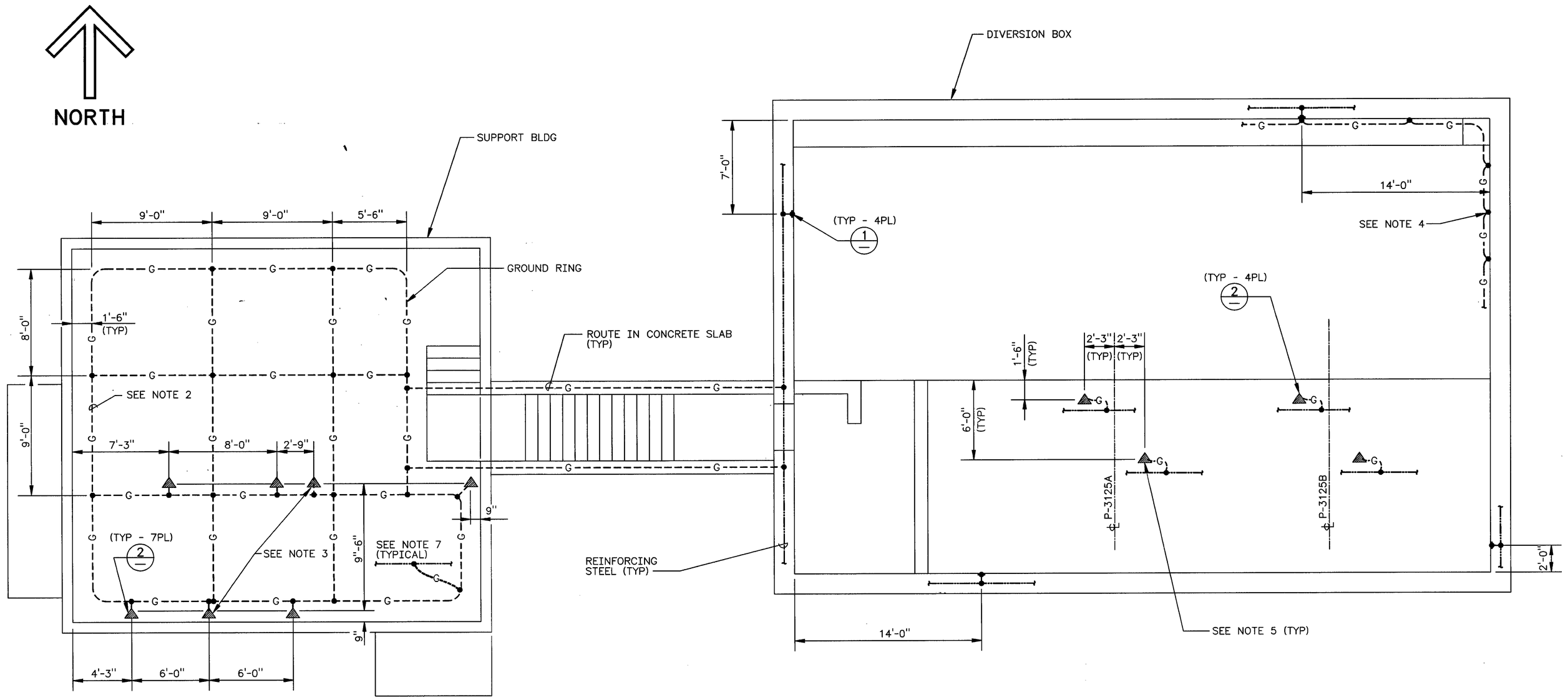

PLAN

SCALE: 1/4" = 1'-0

LEGEND

- ● EXOTHERMIC WELD CONNECTION
- ▲ GROUND PLATE
- ---G--- #4/0 AWG COPPER GROUND CONDUCTOR

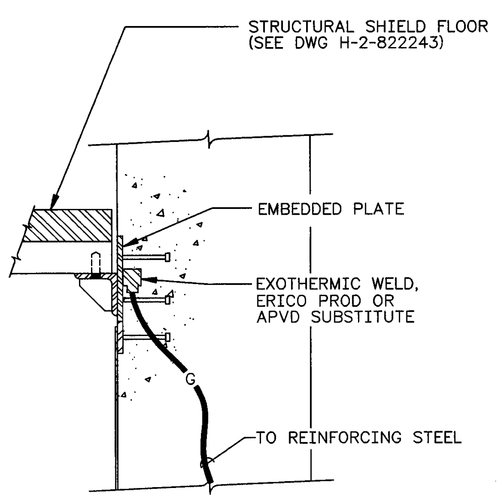

1 DETAIL
SCALE: NONE

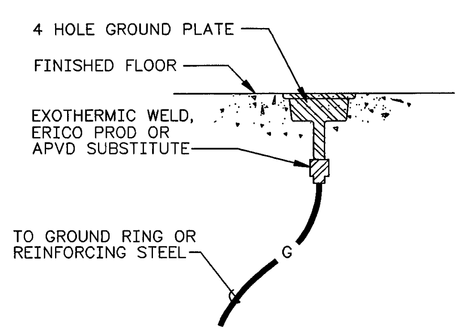

2 DETAIL
SCALE: NONE

NOTES:

1. ABBREVIATIONS ARE PER ANSI Y1.1-1989.
2. ROUTE GROUND RING CONDUCTOR IN CONCRETE SLAB OF SUPPORT BUILDING AND EXOTHERMICALLY WELD TOGETHER AS SHOWN ON DRAWING.
3. INSTALL #4/0 AWG GROUNDING ELECTRODE CONDUCTOR FROM GROUND PLATE TO NEUTRAL TERMINAL OF TRANSFORMER T-3 AND NEUTRAL BUS OF SWITCHBOARD SB-1.
4. BOND EMBEDDED PLATES (FOR LOCATION SEE DWG H-2-822243) ON EACH WALL BY INSTALLING GROUNDING CONDUCTOR BONDING JUMPERS ATTACHED BY EXOTHERMIC WELDS.
5. INSTALL EQUIPMENT GROUNDING CONDUCTOR FROM GROUND PLATES TO EQUIPMENT AFTER EQUIPMENT INSTALLATION.
6. SEE CONSTRUCTION SPECIFICATION W-058-C3, SECTION 16400 FOR MATERIAL DESCRIPTION AND INSTALLATION INSTRUCTIONS UNLESS OTHERWISE NOTED.
7. BOND GROUND RING TO REINFORCING STEEL WITH #4/0 AWG CONDUCTOR (MINIMUM 6 PLACES).

GREGORY P. McDONALD, STATE OF WASHINGTON, 20372, REGISTERED PROFESSIONAL ENGINEER
11-25-97 Rev 1

EXPIRES 05/30/99

DESIGNED	GJ KUBINSKI	DATE	
DSGN ENGR	ML ALEXANDER	9-29-1995	
CHECKED	AR SNOWHITE	9-29-1995	
SAFETY	SEE DR/AT FORM		
ENVIR	SEE DR/AT FORM		
QUAL ENGR	SEE DR/AT FORM		
LEAD ENGR	ML ALEXANDER	9-29-1995	
REVIEW NO.	6	9/25/1995	
APPROVED FOR IMPLEMENTATION BY	CV KATWIJK		
FOR	WHC	DATE	10-13-95

SAFETY CLASS 3

USE CONSTRUCTION
EDT 612958

U.S. DEPARTMENT OF ENERGY
RICHLAND OPERATIONS OFFICE
ICF KAISER HANFORD COMPANY

ELECTRICAL
GROUNDING PLAN & DET
DIVERSION BOX 6241-A

PROJECT W058, REPLACEMENT OF CROSS-SITE TRANSFER SYSTEM

SIZE	BLDG NO.	INDEX NO.	DWG NO.	REV NO.
F	6241-A	7301	H-2-822508	1

SCALE SHOWN | JOB NO. CR1320 | SHEET 1 OF 1

NUMBER	TITLE
H-2-822200	DRAWING LIST

DRAWING TRACEABILITY LIST — REFERENCES — NEXT USED ON

MF	REV NO.	DESCRIPTION	REV BY DATE	KEH APPROVALS	APVD FOR IMPL/INC FOR DATE
AS	1	INC ECN W-058-93 PER ECN W-058-361 AND W-058 PROJECT TURNOVER	CLC 8-13 1997	mcb	11/26/97

REVISIONS

CAD FILE B822508A | CAD CODE 2J:IBM:ACD2:12.0:NN | XREFS N

2 PLOT SCALE: 1=48 | KEHCAD | 1

KEH 0350.00 (03/94) STRTKEHF: 19940303.0900