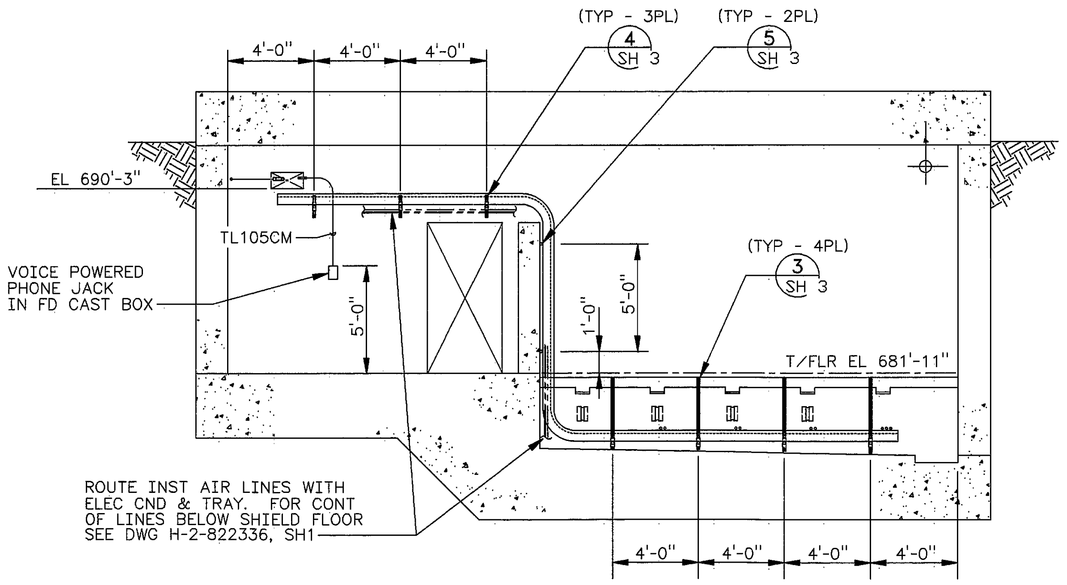

A SH 1 SECTION
SCALE: 1/4" = 1'-0"

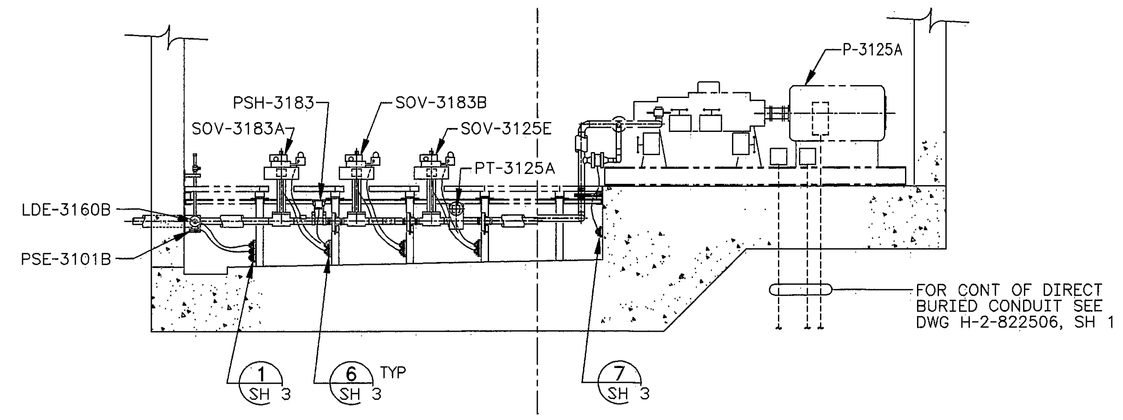

B SH 1 SECTION
SCALE: 1/4" = 1'-0"

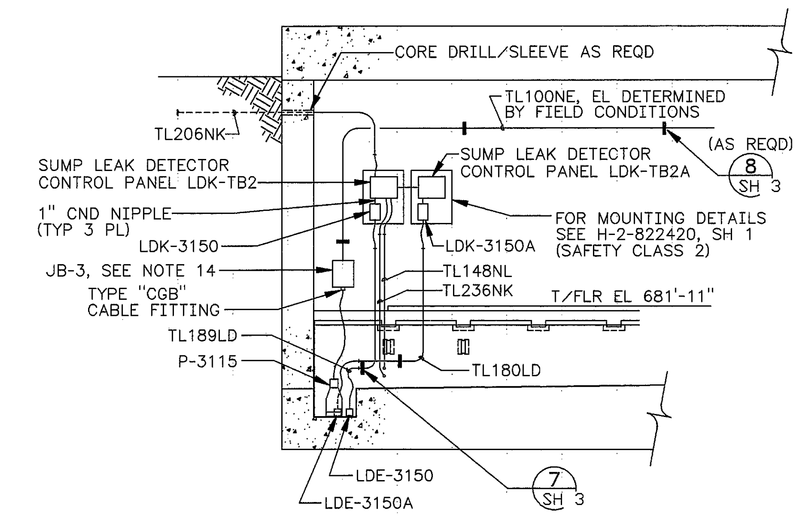

3 C SH 1 SECTION
SCALE: 1/4" = 1'-0"

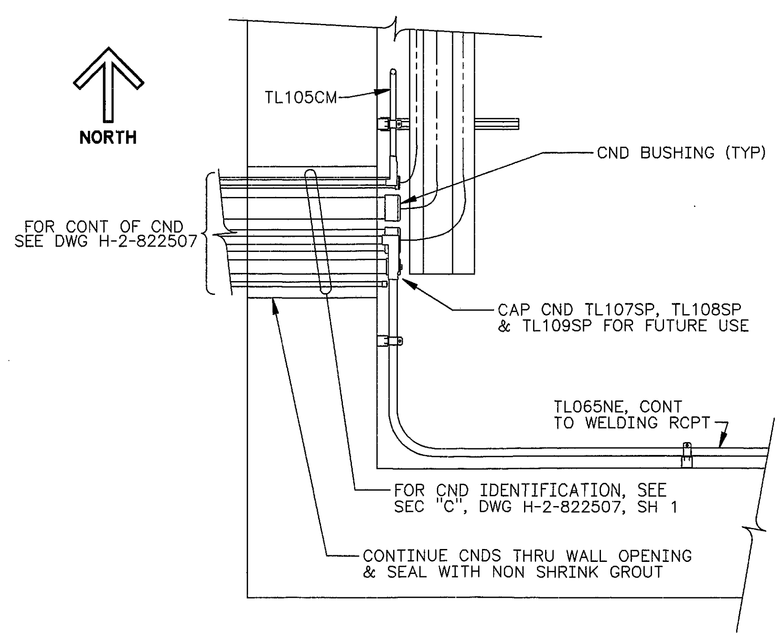

PLAN

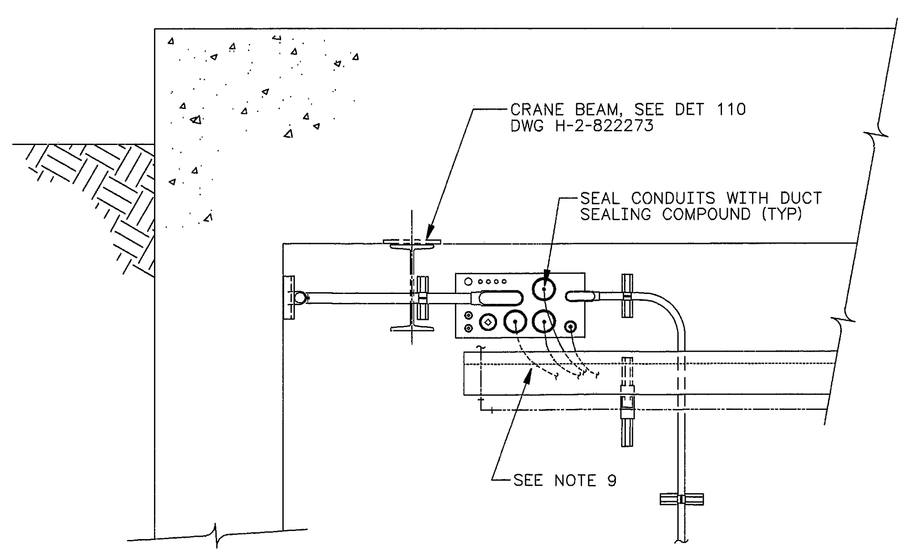

ELEVATION
(LOOKING WEST)

9 SH 1 ENLARGED DETAIL
SCALE: NONE

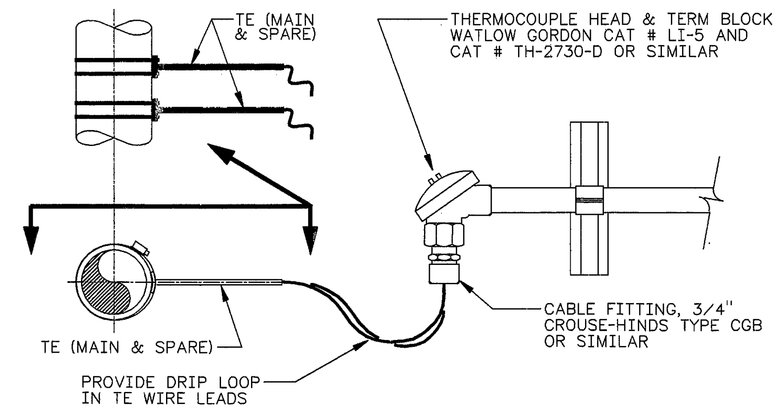

10 SH 1 DETAIL
SCALE: NONE

SEE SHEET 1 FOR NOTES.

GREGORY P. McDONALD, STATE OF WASHINGTON, 20372, REGISTERED PROFESSIONAL ENGINEER
4-3-98
100%

EXPIRES 05/30/99

DESIGNED GJ KUBINSKI DATE	SAFETY CLASS 2	USE CONSTRUCTION	
DSGN ENGR ML ALEXANDER 9/29/1988	U.S. DEPARTMENT OF ENERGY	EDT 612958	
CHECKED AR SNOWHITE 9/29/1988	M RICHLAND OPERATIONS OFFICE		
SAFETY SEE DR/AT FORM	ICF KAISER HANFORD COMPANY		
ENVIR SEE DR/AT FORM	ELECTRICAL		
QUAL ENGR SEE DR/AT FORM	RACEWAY SECTIONS & DETS		
LEAD ENGR ML ALEXANDER 9/29/1988	DIVERSION BOX 6241-A		
REVIEW NO. 5 9/29/1988	PROJECT W058, REPLACEMENT OF CROSS-SITE TRANSFER SYSTEM		
APPROVED FOR IMPLEMENTATION BY C. VAN KATWIJK FOR WHC DATE 10/13/95	SIZE F / BLDG NO. 6241-A / INDEX NO. 7301 7501 / DWG NO. H-2-822510		REV NO. 3
	SCALE SHOWN	JOB NO. CR1320	SHEET 2 OF 3

MF	REV NO.	DESCRIPTION	REV BY	DATE	KEH APPROVALS	APVD FOR IMPL/IND FOR DATE
S	3	INCORPORATED ECN W058-381 W-058 PROJECT TURNOVER	HBM	3-3-1998	JLH 4/3/98	MLB 4-6-98

REVISIONS

NUMBER	TITLE

DRAWING TRACEABILITY LIST

NUMBER	TITLE

REFERENCES

NEXT USED ON

CAD FILE B822510B CAD CODE 2J:IBM:ACD2:12.0:NN XREF'S N

PLOT SCALE: 1=48 KEHCAD

KEH 0350.00 (03/94)
STRTKEH: 199403030900