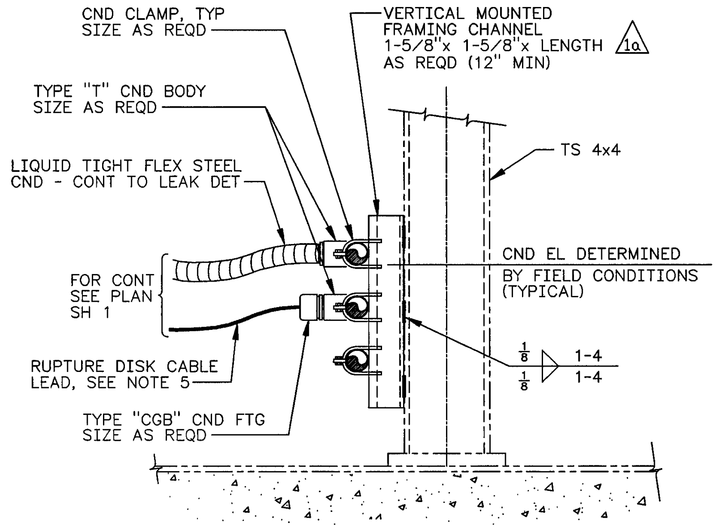

1 DETAIL
SH 1 SCALE: NONE

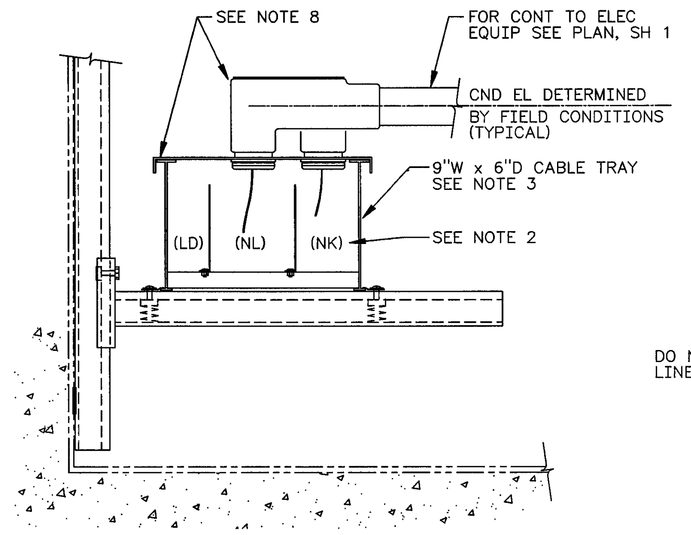

2 DETAIL
SH 1 SCALE: NONE

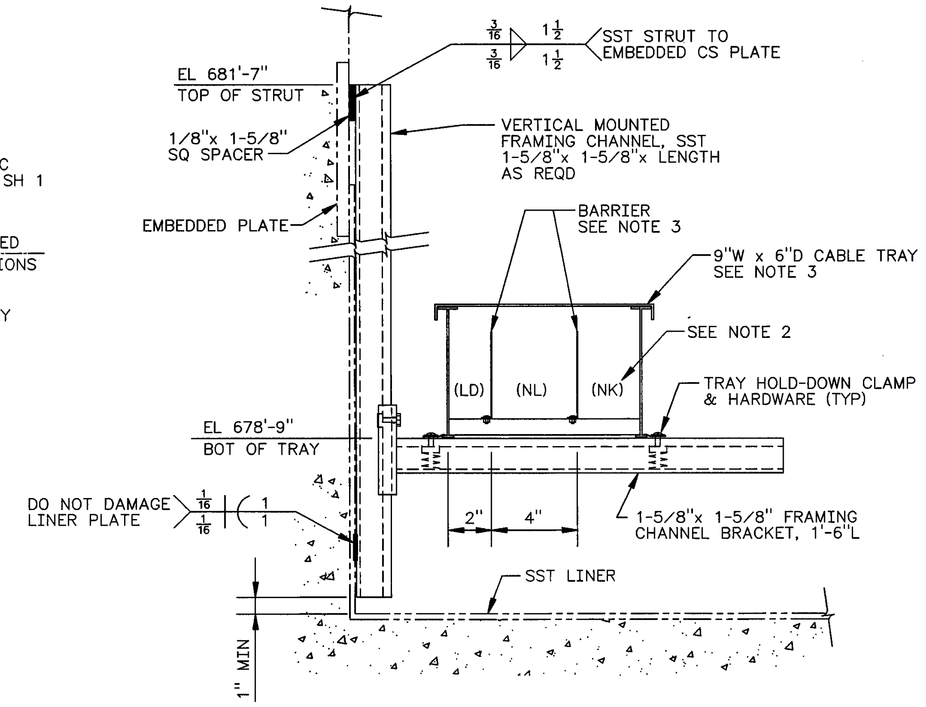

3 DETAIL
SH 1 SCALE: NONE

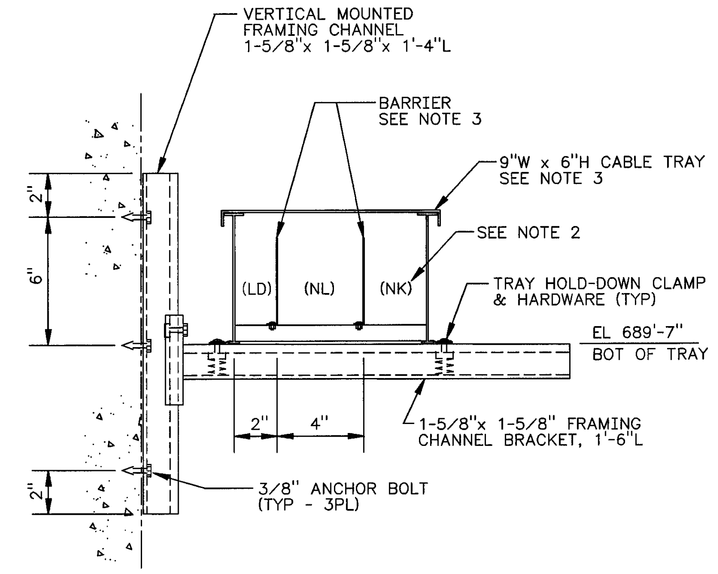

4 DETAIL
SH 1 SCALE: NONE

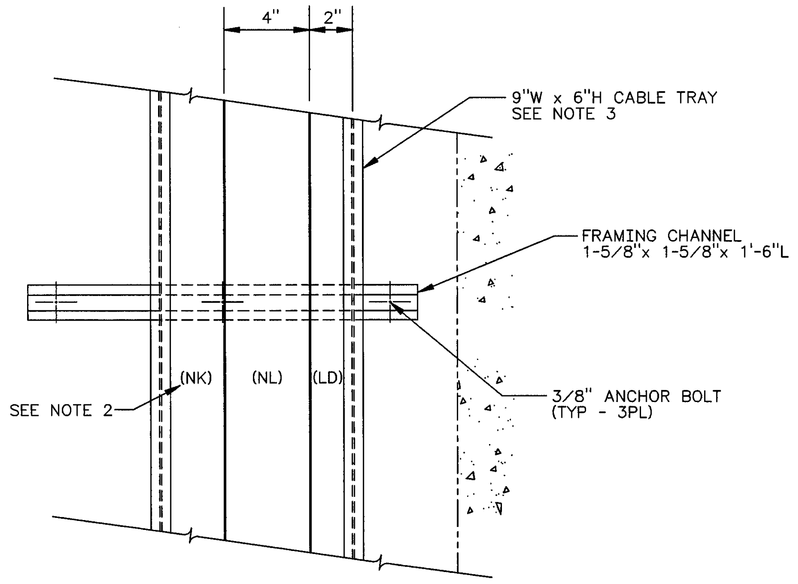

NOTE: CABLE TRAY SHOWN WITHOUT COVER

5 DETAIL
SH 1 SCALE: NONE
(LOOKING SOUTH)

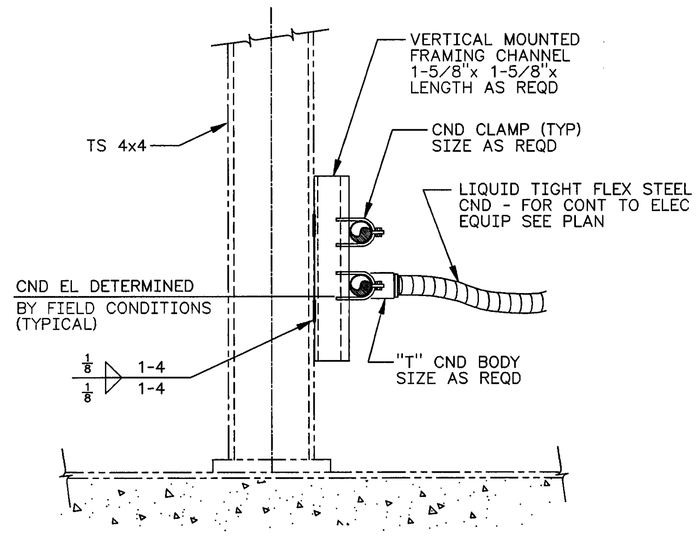

6 DETAIL
SH 1 SCALE: NONE

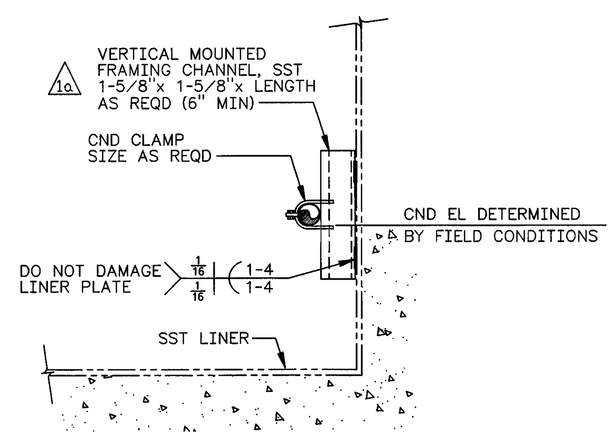

7 DETAIL
SH 2 SCALE: NONE

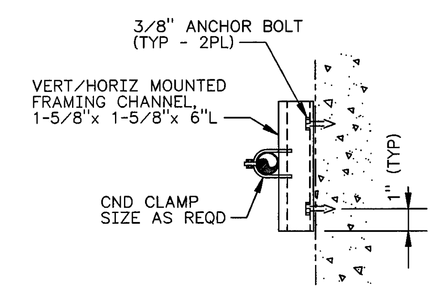

8 DETAIL
SH 1 SCALE: NONE

SEE SHEET 1 FOR NOTES.

GREGORY P. MCDONALD
STATE OF WASHINGTON
20097
REGISTERED
PROFESSIONAL ENGINEER
11-20-97
Rev 1

EXPIRES 05/30/99

NUMBER	TITLE
DRAWING TRACEABILITY LIST	

NUMBER	TITLE
NEXT USED ON	REFERENCES

MF	REV NO.	DESCRIPTION	REV BY DATE	KEH APPROVALS	APV'D FOR IMPL/INC FOR DATE
11S	1	a) INC ECN W-058-238 W-058 PROJECT TURNOVER	CLC 8-13 1997	8/13/97 8/13/97 8/13/97	11/20/97

REVISIONS

CAD FILE B822510C CAD CODE 2J:IBM:ACD2:12.0:NN XREF'S N

DESIGNED	GJ KUBINSKI	DATE	
DSGN ENGR	ML ALEXANDER	8-4 1995	
CHECKED	AR SNOWHITE	8-11 1995	
SAFETY	SEE DR/AT FORM		
ENVIR	SEE DR/AT FORM		
QUAL ENGR	SEE DR/AT FORM		
LEAD ENGR	ML ALEXANDER	8-14 1995	
REVIEW NO.	3	8-7 1995	

APPROVED FOR IMPLEMENTATION
BY C VAN KATWIJK
FOR WHC DATE 10-13-95

SAFETY CLASS 3 USE CONSTRUCTION EDT 612958

U.S. DEPARTMENT OF ENERGY
M RICHLAND OPERATIONS OFFICE
ICF KAISER HANFORD COMPANY

ELECTRICAL
RACEWAY SUPPORT DETAILS
DIVERSION BOX 6241-A

PROJECT W058, REPLACEMENT OF CROSS-SITE TRANSFER SYSTEM

SIZE	BLDG NO.	INDEX NO.	DWG NO.	REV NO.
F	6241-A	7301 7501	H-2-822510	1

SCALE SHOWN JOB NO. CR1320 SHEET 3 OF 3

PLOT SCALE: 1=48 KEHCAD

KEH 0350.00 (03/94)
STRTKEHF: 199403030900