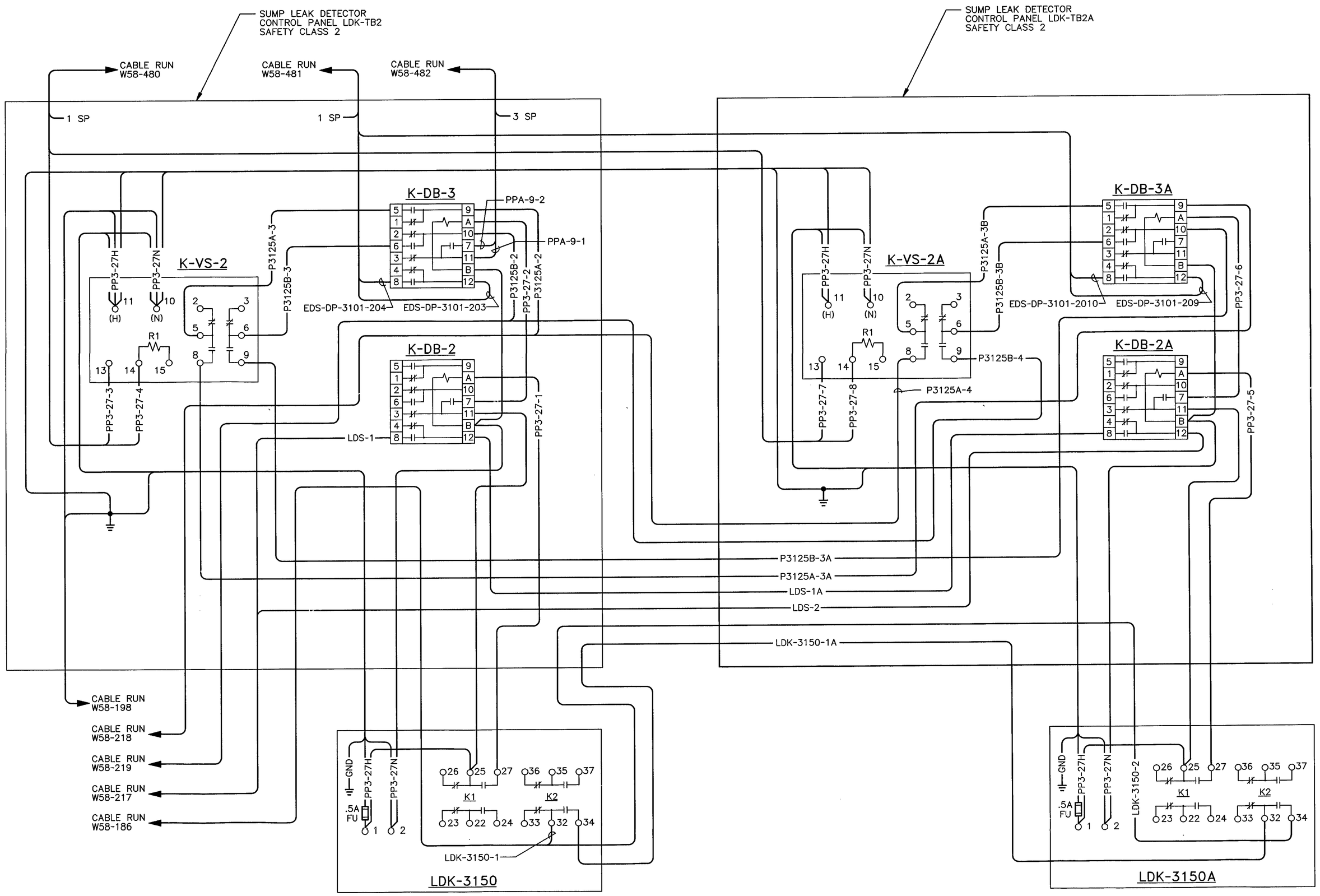

SUMP LEAK DETECTION WIRING DIAGRAM

SEE NOTES 3 & 5
SAFETY CLASS 2

SEE SHEET 1 FOR NOTES.

EXPIRES 03/15/99

DATE: FEB 05 1998 STA: 4 ID: 2

DRAWN BY GJ KUBINSKI	1-14-98	SAFETY CLASS 2	USE CONSTRUCTION
DSGN ENGR	2-9-98		REVIEW NO. 1 DATE 01-14-98
CHECKED	2/9/98		
SAFETY	2/9/98		
ENVR	2/9/98		
QUAL ENGR	2/9/98		
LEAD ENGR	2-9-98		
CUSTOMER	2-5-98		
COMPANY NHC			
APVD			
APVD			

U.S. DEPARTMENT OF ENERGY
Richland Operations Office
FLUOR DANIEL NORTHWEST, INC.

ELECTRICAL
WIRING DIAGRAMS
DIVERSION BOX 6241-A

PROJECT W058, REPLACEMENT OF CROSS-SITE TRANSFER SYSTEM

SIZE	BLDG NO	INDEX NO	DWG NO	REV
F	6241-A	7502	H-2-822512	0

SCALE NONE ECN W-058-381 SHEET 2 OF

DWG NO	TITLE	REF NUMBER	TITLE
DRAWING TRACEABILITY LIST		NEXT USED ON	REFERENCES

REVISIONS

REV REM	MFD	REV NO	DESCRIPTION	REV BY DATE	ENGR	COMPANY

CADFILE B822512B CADCODE 2J:IBM:ACD2:12.0:NN

2 PLOT SCALE: 1=1

GTITLE.DWG (10/96)

DWG NO H-2-822512 SH 2 OF REV 0