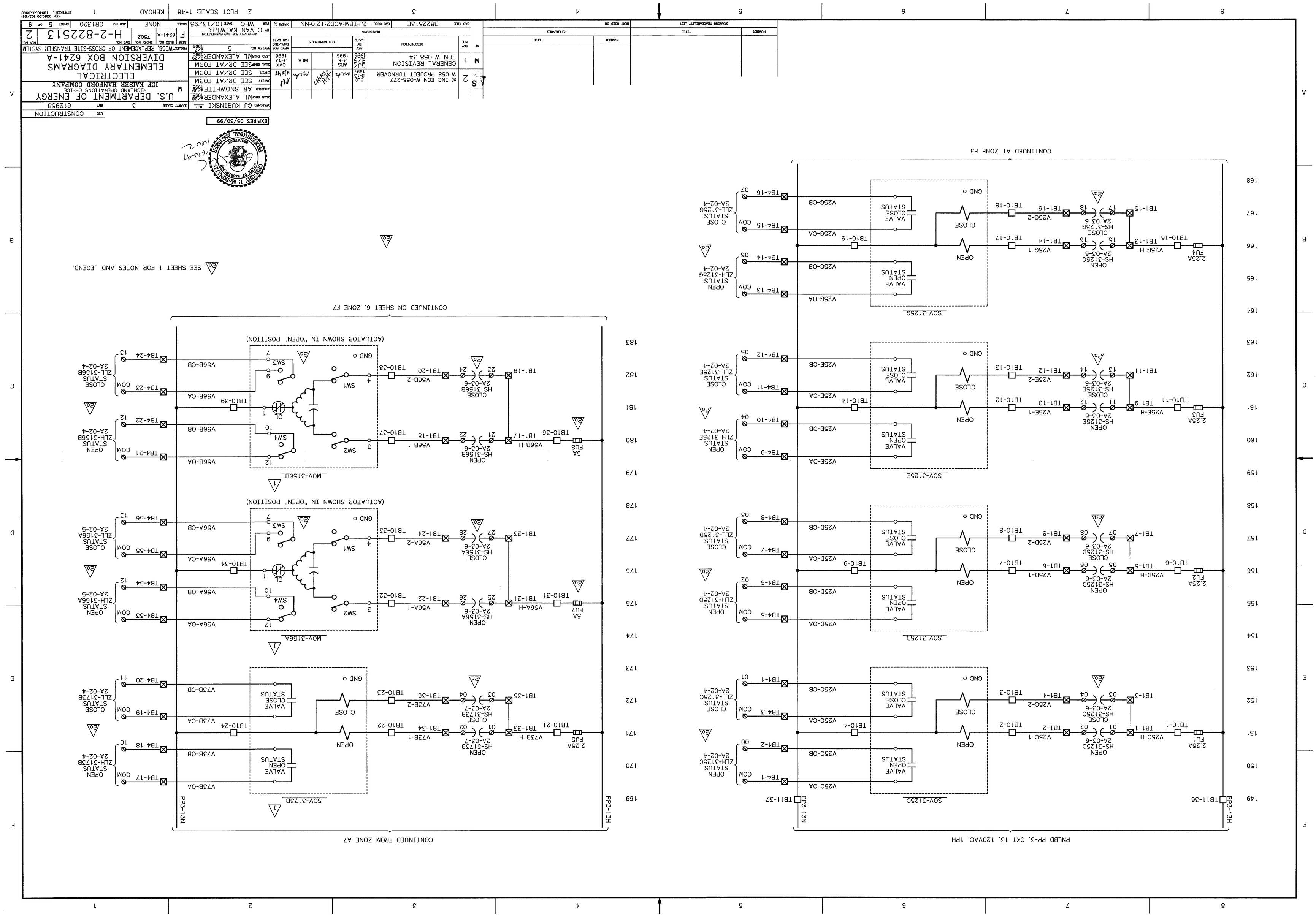

U.S. DEPARTMENT OF ENERGY
RICHLAND OPERATIONS OFFICE
ICF KAISER HANFORD COMPANY
ELECTRICAL
ELEMENTARY DIAGRAMS
DIVERSION BOX 6241-A
H-2-822513
2
CONTINUED AT ZONE F3
CONTINUED ON SHEET 6, ZONE F7
CONTINUED FROM ZONE A7
PNLBD PP-3, CKT 13, 120VAC, 1PH
SEE SHEET 1 FOR NOTES AND LEGEND.
EXPIRES 05/30/99