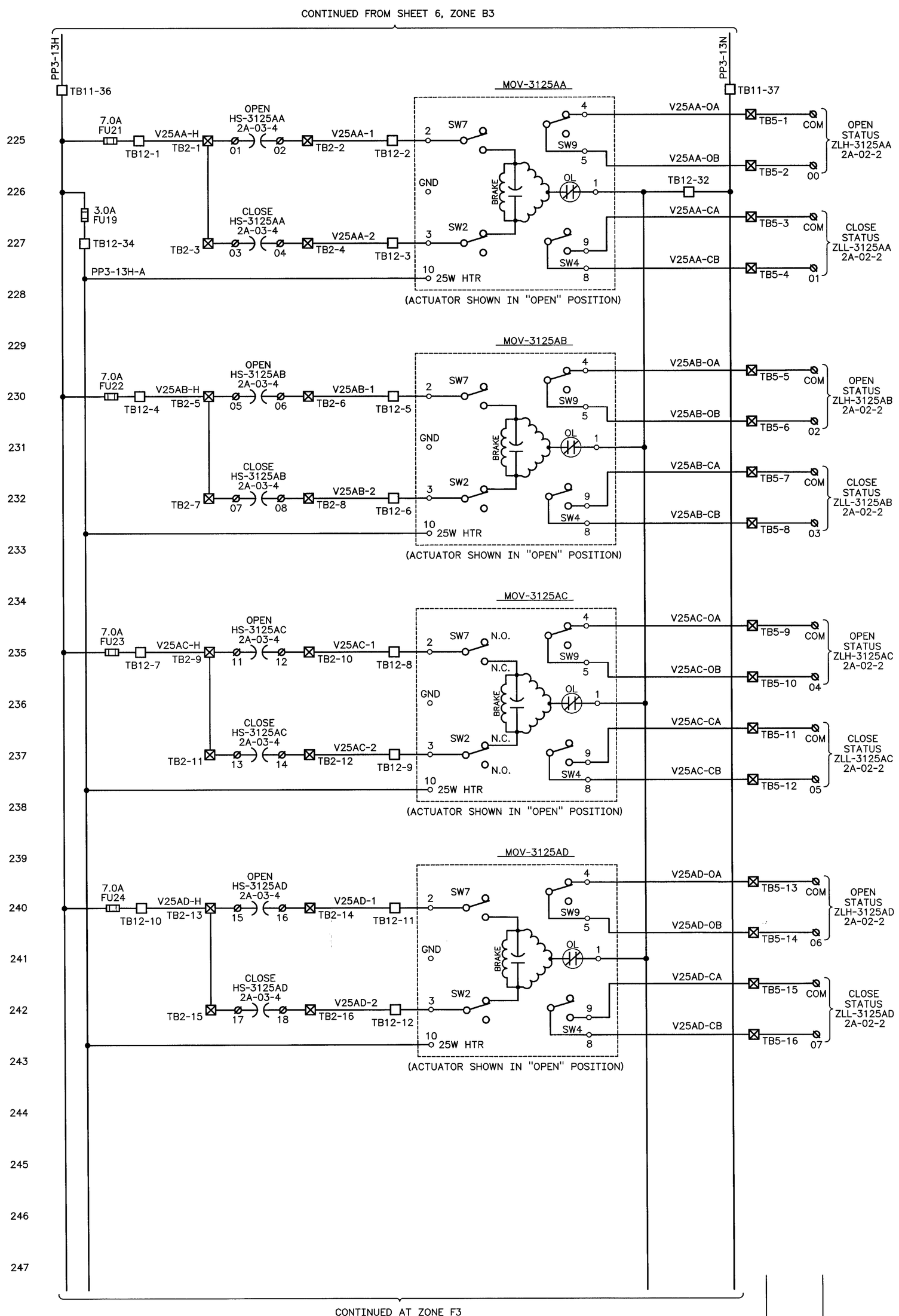

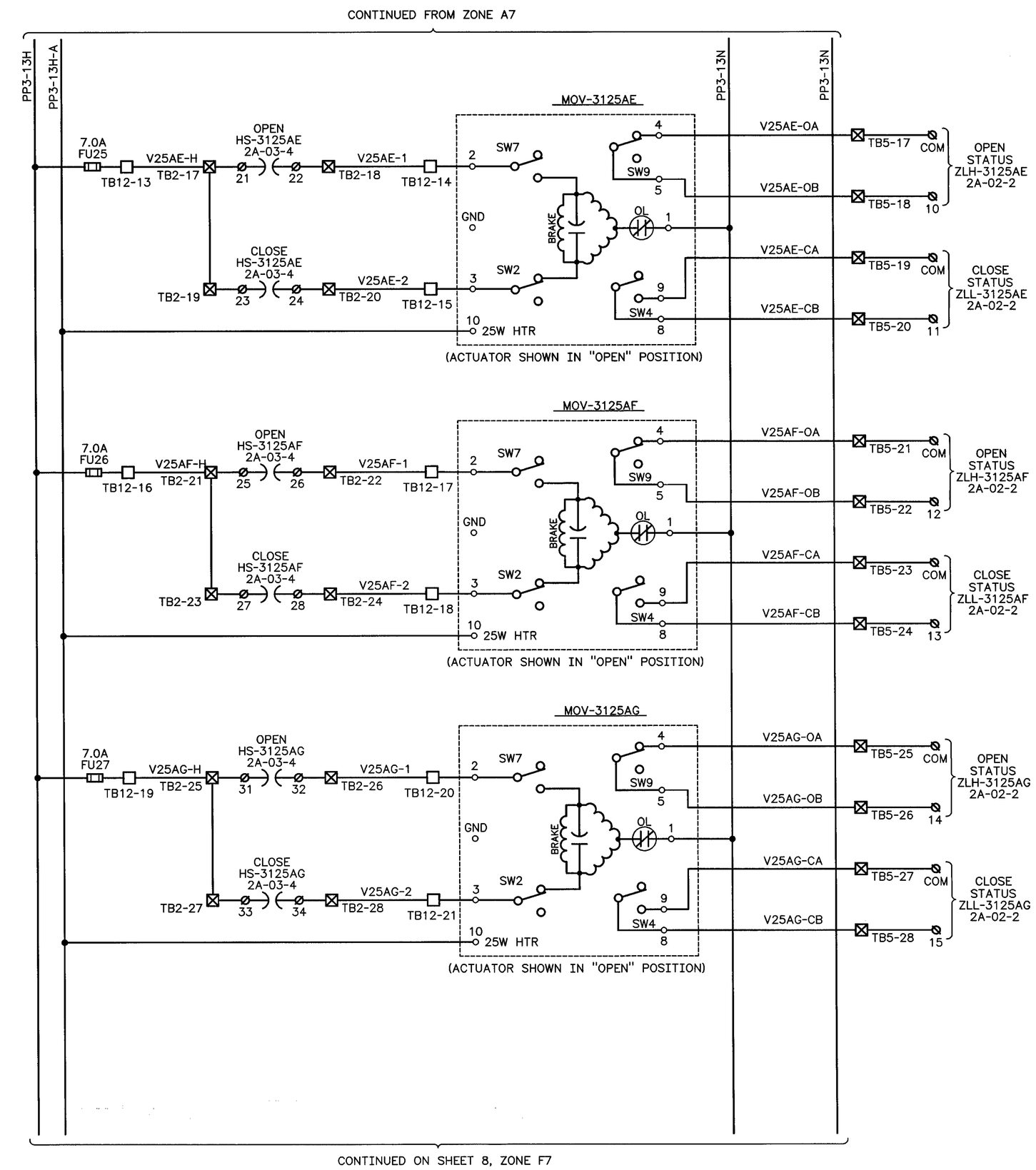

SEE SHEET 1 FOR NOTES AND LEGEND.

GREGORY P. McDONALD STATE OF WASHINGTON 30577 REGISTERED PROFESSIONAL ENGINEER

EXPIRES 05/30/99

CD	2	PER ECN W-058-361 W-058 PROJECT TURNOVER	CLC 8-13 1997	mls	3/13/97	mls	DLO 4/14/97
M	1	ECN W-058-157 GENERAL REVISION PER	GJK 12-9 1996	MLA		MLA	CVK 6-17 1997
MF	REV NO.	DESCRIPTION	REV BY DATE	KEH APPROVALS			APVD FOR SMPL-DNC FOR DATE

REVISIONS

NUMBER	TITLE	NUMBER	TITLE
DRAWING TRACEABILITY LIST		REFERENCES	

NEXT USED ON

CAD FILE B822513G CAD CODE 2J:IBM:ACD2:12.0:NN XREFS N

DESIGNED	GJ KUBINSKI	DATE	
DSGN ENGR	ML ALEXANDER	12-5 1996	
CHECKED	AR SNOWHITE	12-5 1996	
SAFETY	SEE DR/AT FORM		
DRVER	SEE DR/AT FORM		
QUAL ENGR	SEE DR/AT FORM		
LEAD ENGR	ML ALEXANDER	12-5 1996	
REVIEW NO.	1	12-9 1996	

APPROVED FOR IMPLEMENTATION BY C VAN KATWIJK FOR WHC DATE 3/13/96

SAFETY CLASS	3	USE	CONSTRUCTION
		EDT	612970

U.S. DEPARTMENT OF ENERGY
M RICHLAND OPERATIONS OFFICE
ICF KAISER HANFORD COMPANY

ELECTRICAL
ELEMENTARY DIAGRAMS
DIVERSION BOX 6241-A

PROJECT	SIZE	BLDG NO.	INDEX NO.	DWG NO.	REV NO.
W058, REPLACEMENT OF CROSS-SITE TRANSFER SYSTEM	F	6241-A	7502	H-2-822513	2

SCALE NONE JOB NO. CR1320 SHEET 7 OF 9

PLOT SCALE: 1=48 KEHCAD

KEH 0350.00 (03/94) STRYKER: 199403030900