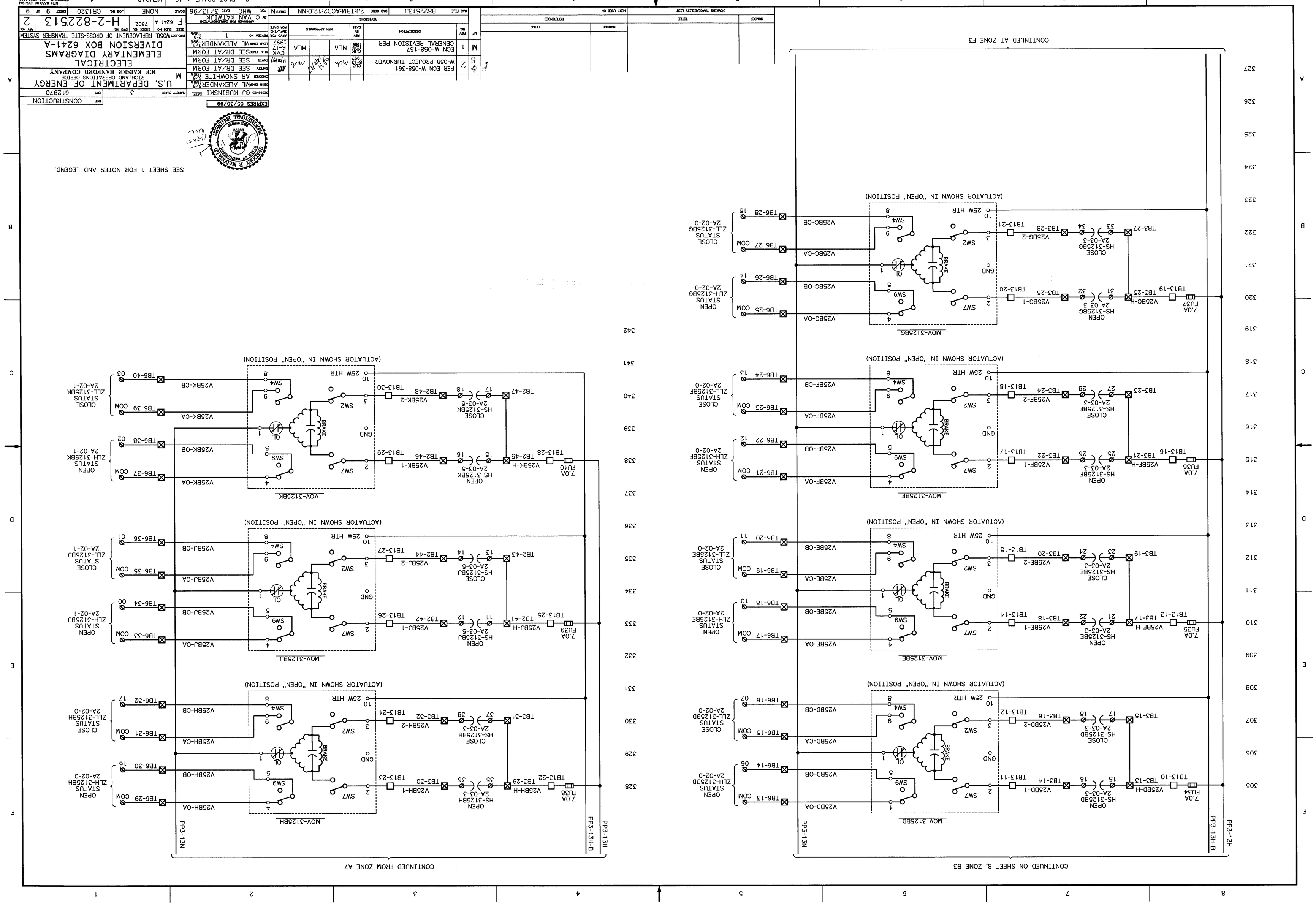

CONTINUED AT ZONE F3
CONTINUED ON SHEET 8, ZONE B3
CONTINUED FROM ZONE A7
(ACTUATOR SHOWN IN "OPEN" POSITION)
MOV-312SBG
MOV-312SBF
MOV-312SBE
MOV-312SBD
MOV-312SBH
MOV-312SBJ
MOV-312SBK
PP3-13N
PP3-13H-B
PP3-13H
SEE SHEET 1 FOR NOTES AND LEGEND.
U.S. DEPARTMENT OF ENERGY
RICHLAND OPERATIONS OFFICE
ICF KAISER HANFORD COMPANY
ELECTRICAL
ELEMENTARY DIAGRAMS
DIVERSION BOX 6241-A
H-2-822513
2
CONSTRUCTION
EXPIRES 05/30/99