POLE SCHEDULE

POLE NUMBER	POLE HEIGHT	POLE CLASS	SETTING DEPTH	POLE COORDINATES
NP1	55'	2	7'-6"	N37801,W73010.5
NP2	55'	2	7'-6"	N36367,W72623.5
W459	55'	2	7'-6"	REPLACE EXST POLE
NP4	55'	2	7'-6"	BY OTHERS

1b 1a

SYMBOL LIST

SYMBOL	DESCRIPTION (SEE NOTE 1)
○ 121-36	EXISTING POLE 121-36 (SEE NOTE 4)
● NP1	NEW POLE NP1 (SEE POLE SCHEDULE)
⟶	DOWN GUY & ANCHOR
——— E -	EXISTING 2400 VOLT AERIAL LINE E8L1 (REF)
——— SL-	EXISTING AERIAL STREET LIGHTING CIRCUIT (REF)
——— C -	EXISTING 13.8 KV, 3 PH, 3 W AERIAL CIRCUIT
——— C —	NEW 13.8 KV, 3 PH, 3 W AERIAL CIRCUIT (SEE DWG H-2-822523 SH 1 MATERIAL LIST, PART NO 19)

NOTES:

1. SEE CONSTRUCTION SPECIFICATION W-058-C3 FOR MATERIAL DESCRIPTION AND INSTALLATION INSTRUCTIONS UNLESS NOTED OTHERWISE.
2. NOT USED (1b)
3. REPLACE EXISTING POLE 121-34 WITH NEW POLE NP1. REMOVE THE EXISTING AERIAL CABLES AND ASSOCIATED HARDWARE BETWEEN POLES 121-34 AND 121-36. INSTALL OVERHEAD GUY WIRES FROM NP1 TO EXISTING POLE 121-36.
4. THE POLE NUMBERS SHOWN FOR EXISTING POLES REPRESENT THE NUMBERS FOUND ON THE ASSOCIATED POLE. SEE REF DWG H-13-000279 SH 6 & 8.
5. PRIOR TO INSTALLING THE NEW DOWN GUY AND ANCHOR, DETERMINE EXACT LOCATION OF EXISTING PIPE. ADJUST ANGLE OF DOWN GUY AS REQUIRED.

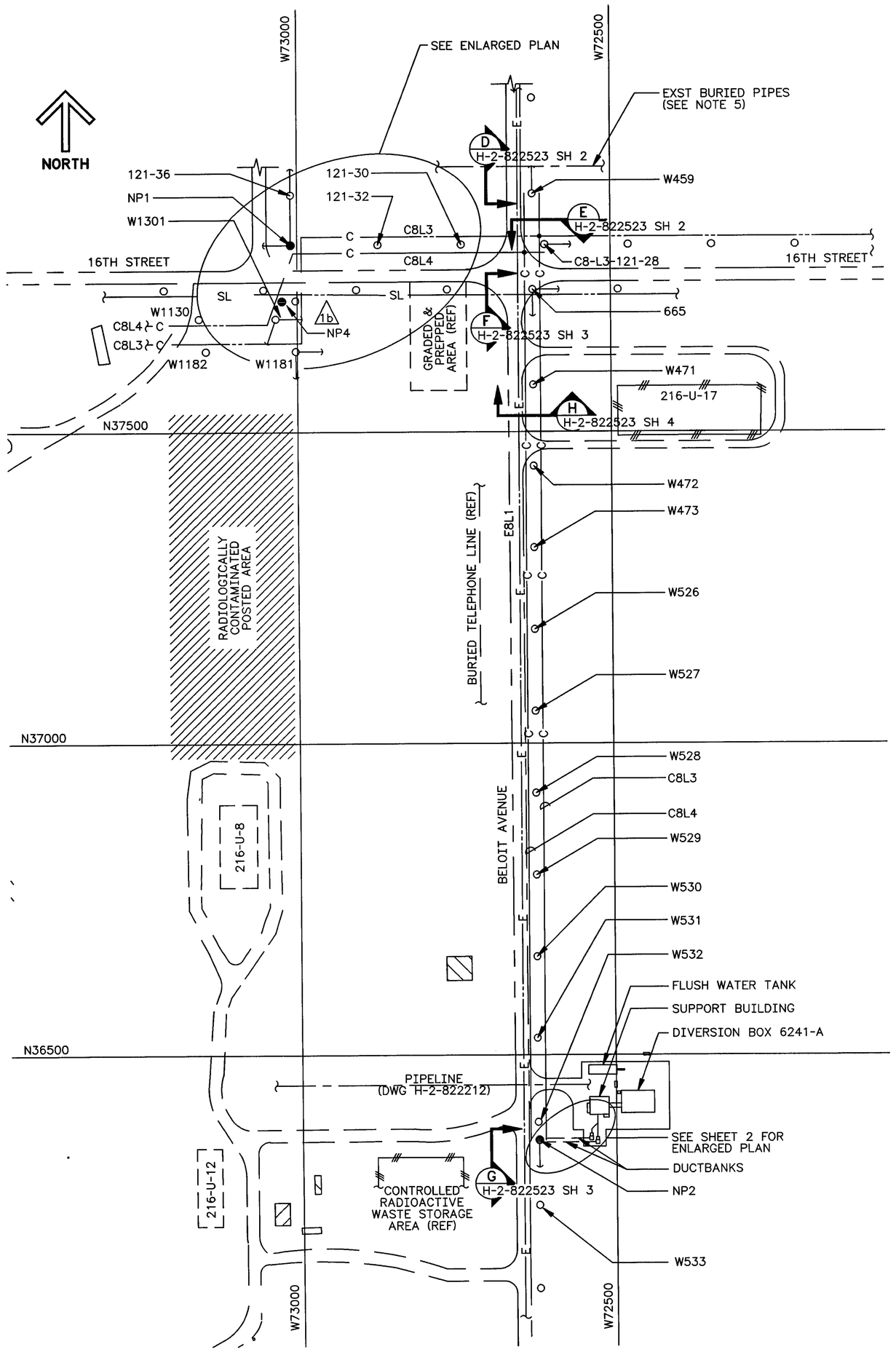

PARTIAL SITE PLAN - 200 WEST AREA

SCALE: 1"=100'-0"

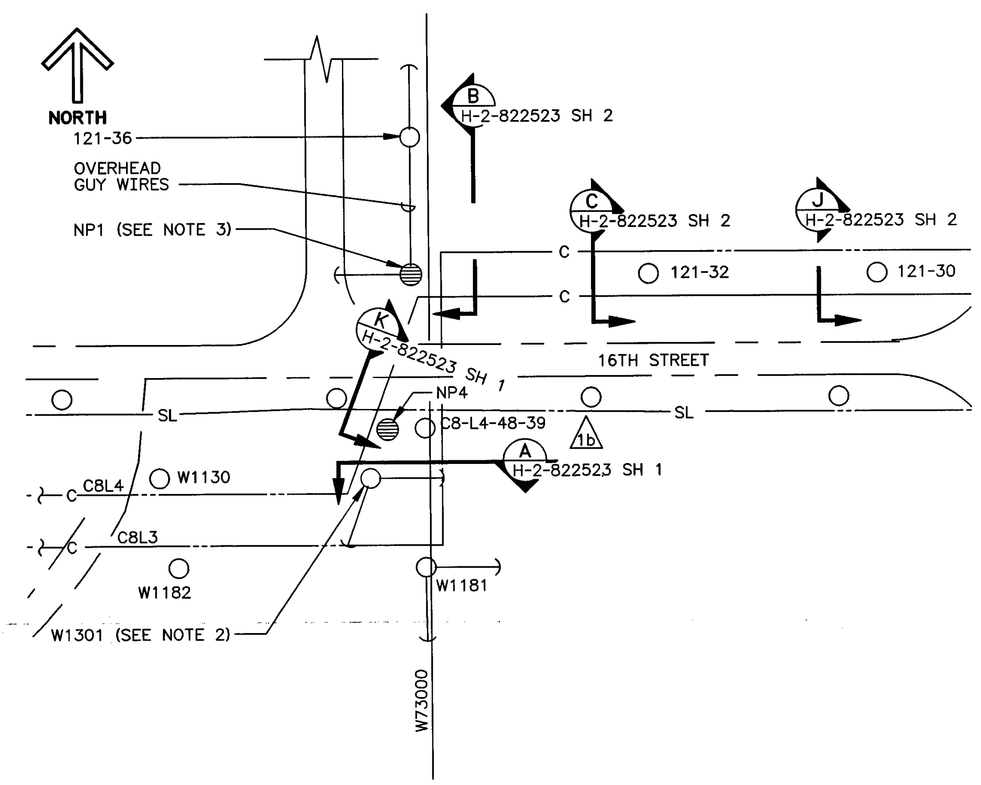

ENLARGED PLAN

SCALE: 1"=50'-0"

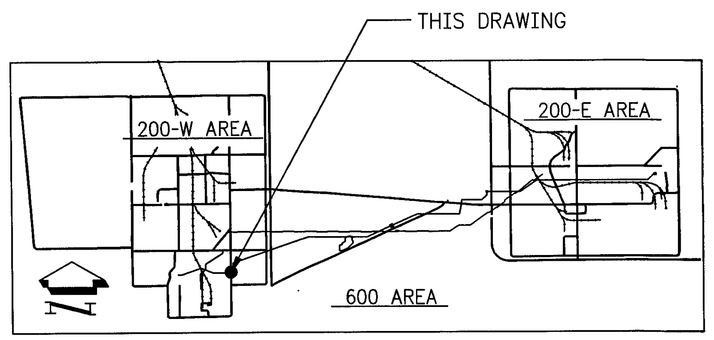

KEY PLAN

GREGORY P. McDONALD STATE OF WASHINGTON 20376 REGISTERED PROFESSIONAL ENGINEER

11-20-97 rev 1

EXPIRES 05/30/99

DESIGNED	GL AVERY	DATE	
DSGN ENGR	ML ALEXANDER	8-19 1995	
CHECKED	GF McDONALD	8-14 1995	
SAFETY	SEE DR/AT FORM		
ENVIR	SEE DR/AT FORM		
QUAL ENGR	SEE DR/AT FORM		
LEAD ENGR	ML ALEXANDER	8-14 1995	
REVIEW NO.	6	8-11 1995	
APPROVED FOR IMPLEMENTATION BY	C VAN KATWIJK		
FOR	WHC	DATE	10-13-95

SAFETY CLASS 3 — USE CONSTRUCTION — EDT 612958

M U.S. DEPARTMENT OF ENERGY
RICHLAND OPERATIONS OFFICE
ICF KAISER HANFORD COMPANY

ELECTRICAL SITE PLAN

PROJECT W-058, REPLACEMENT OF CROSS-SITE TRANSFER SYSTEM

SIZE	SLDG NO.	INDEX NO.	DWG NO.	REV NO.
F	6241-A	8001	H-2-822522	1

SCALE SHOWN — JOB NO. CR1320 — SHEET 1 OF 2

KEH 0350.00 (03/94) STRTKEHF: 19940303.0900

NUMBER	TITLE
H-13-000279 SH 6 & 8	200 WEST AREA ELECTRICAL UTILITIES POWER POLE MAP
H-2-822200	DRAWING LIST

DRAWING TRACEABILITY LIST — REFERENCES — NEXT USED ON

MF	REV NO.	DESCRIPTION	REV BY DATE	KEH APPROVALS	APVD FOR IMPL./INC FOR DATE
	1	b) INC ECN W-058-160 a) INC ECN W-058-149 PER c) ECN W-058-361 & W-058 PROJECT TURNOVER	CLC 8-13 1997	mlb	9/11 10/97 mlb 11/20/97

REVISIONS

CAD FILE B822522A — CAD CODE 2J:IBM:ACD2:12.0:NN — XREFS Y

2 PLOT SCALE: 1=1 — KEHCAD 1c — 1