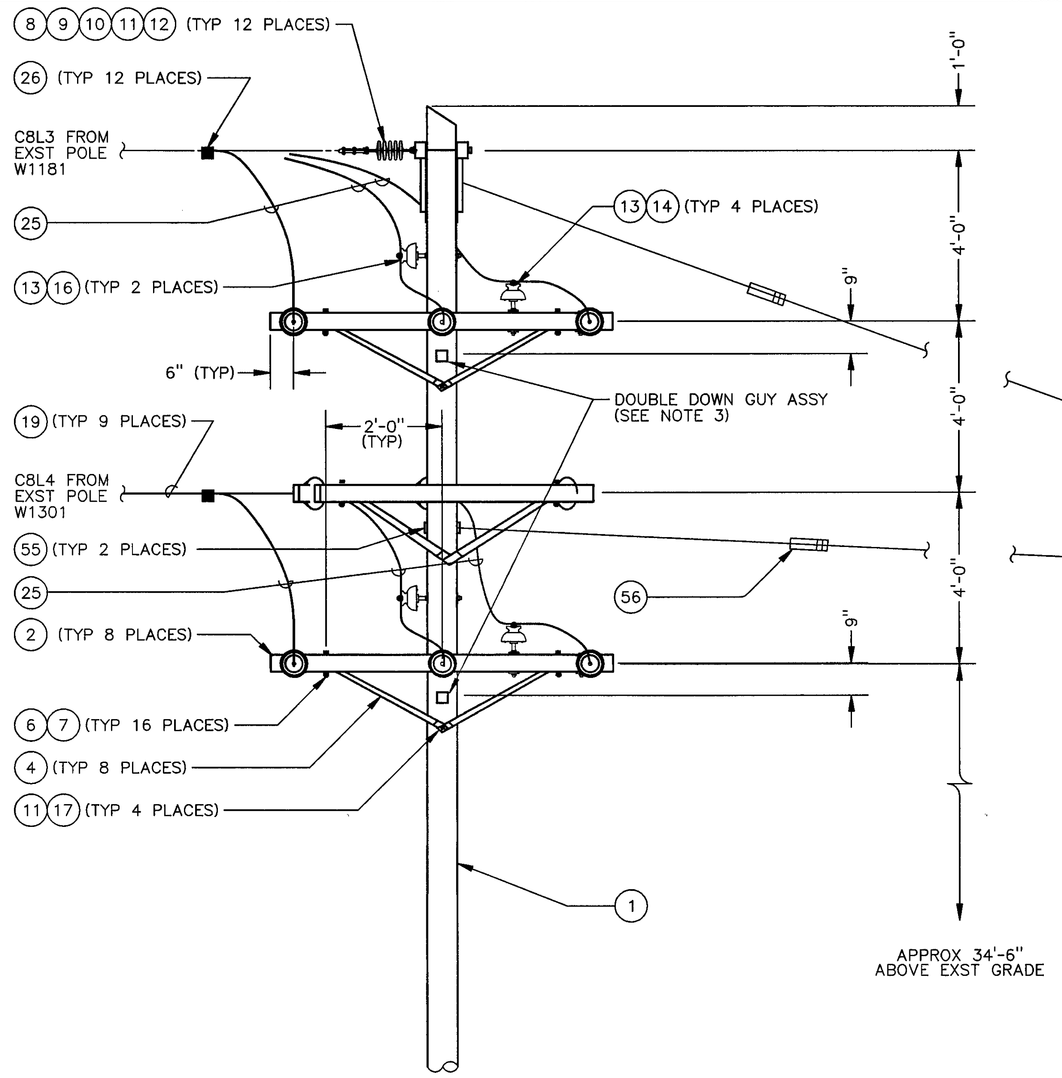

POLE NP1

B VIEW - WEST
H-2-822522 SH 1

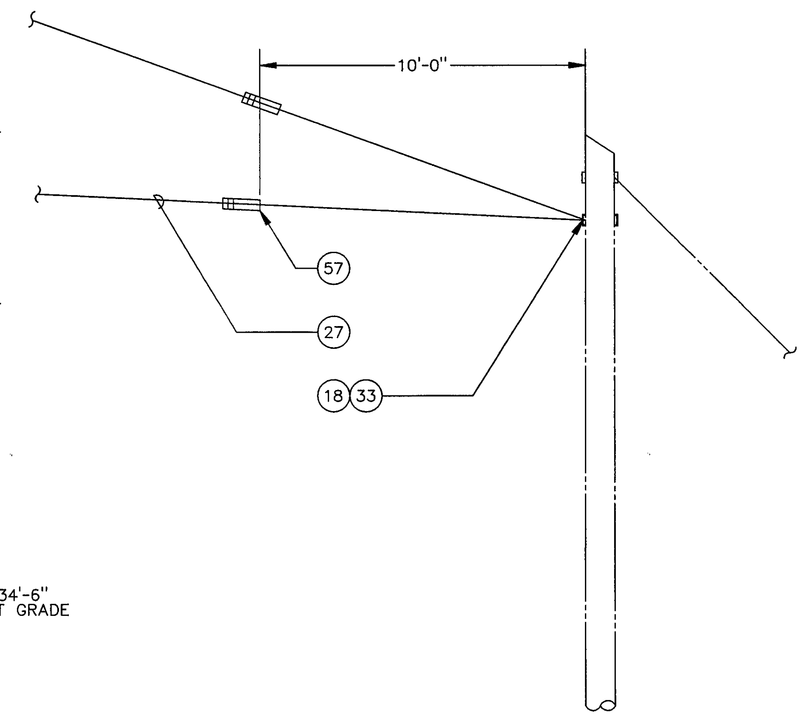

EXST POLE 121-36

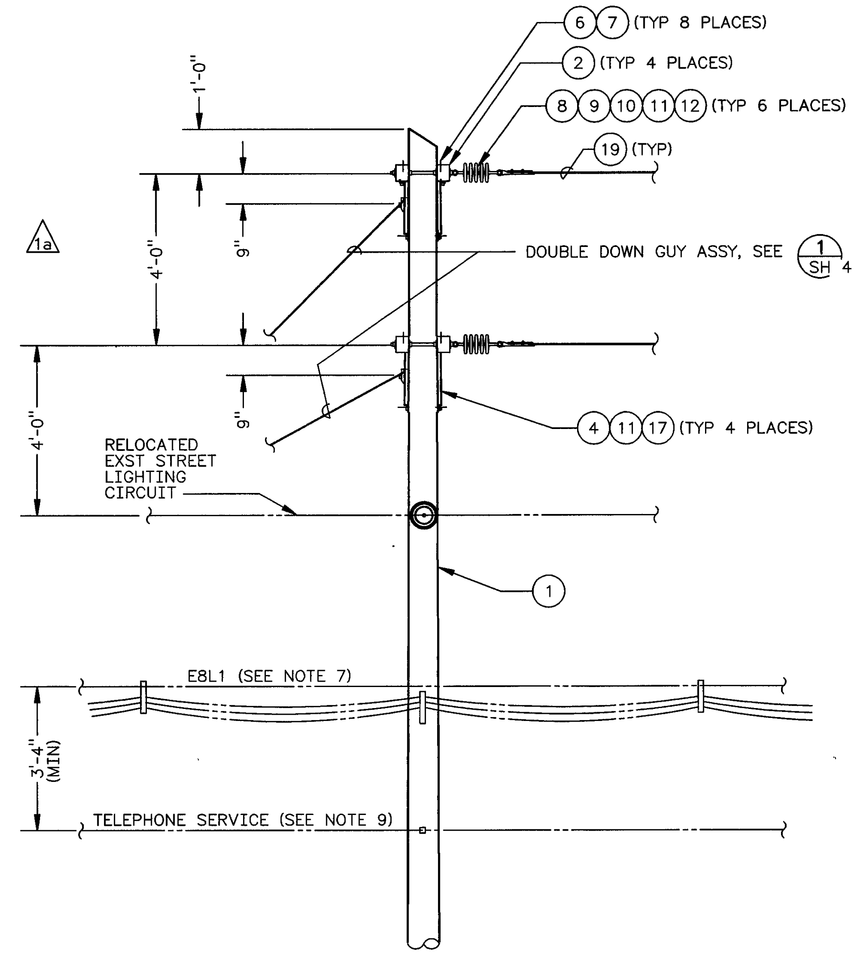

NEW POLE W459

(REPLACE EXST POLE WITH NEW 55' POLE) 1a

D VIEW - EAST
H-2-822522 SH 1
(SEE NOTE 6)

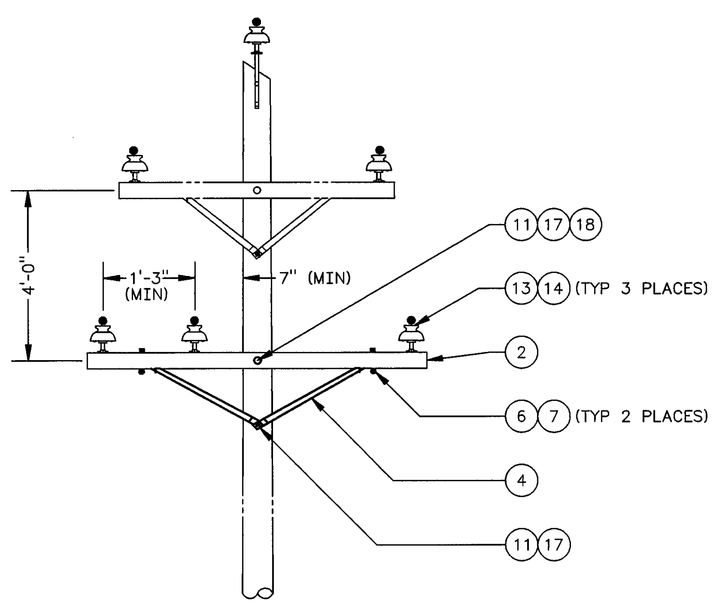

EXST POLE 121-32

C VIEW - EAST
H-2-822522 SH 1
(SEE NOTE 6) 1a

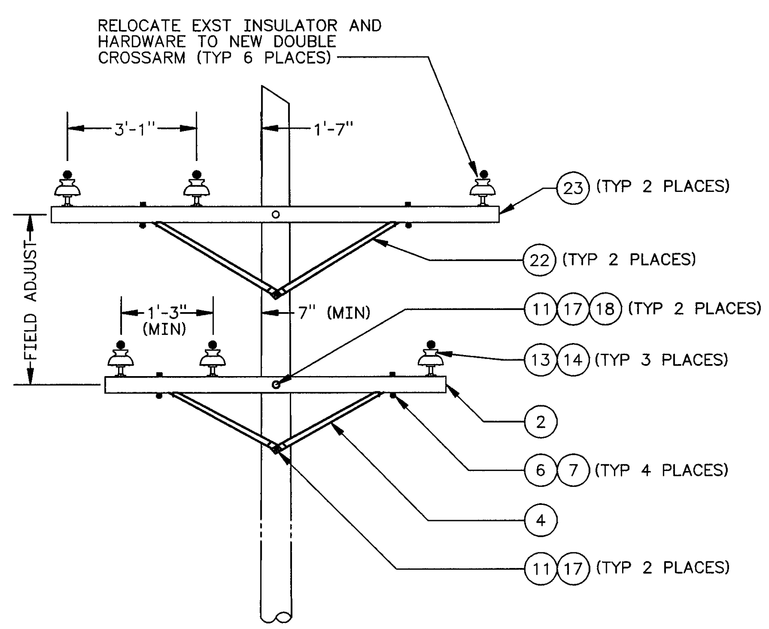

EXST POLE 121-30

J VIEW - EAST 1a
H-2-822522 SH 1
(SEE NOTE 6)

1a

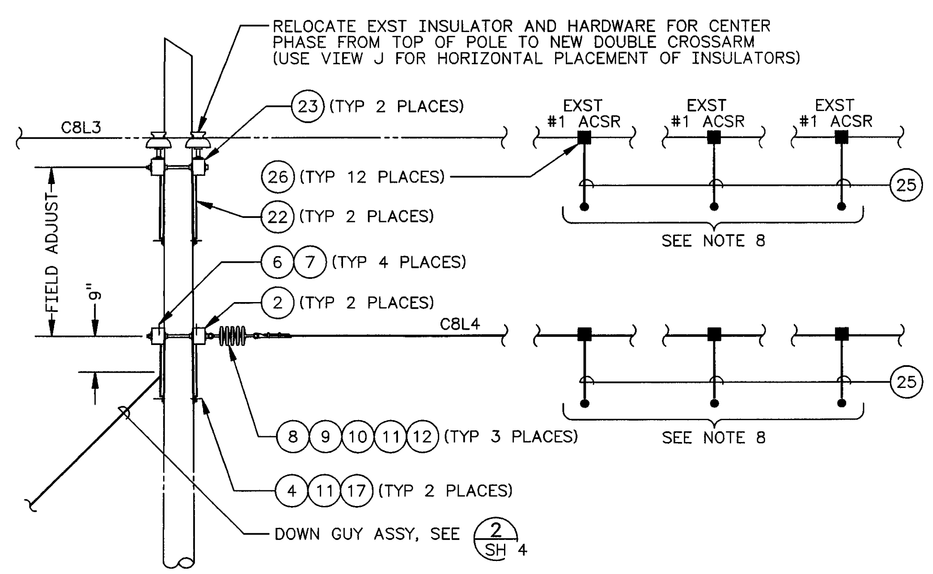

EXST POLE C8-L3-121-28

E VIEW - SOUTH
H-2-822522 SH 1
(SEE NOTE 6)

NOTES:

1. SEE SHEET 1 FOR NOTES, REFERENCE DRAWINGS AND MATERIAL LIST.

GREGORY P. McDONALD STATE OF WASHINGTON 36372 REGISTERED PROFESSIONAL ENGINEER
11-20-97 rev 1

EXPIRES 05/30/99

USE	CONSTRUCTION		
SAFETY CLASS	3	EDT	612958

DESIGNED	GL AVERY	DATE
DSGN ENGR	ML ALEXANDER	8-14 1995
CHECKED	GP McDONALD	8-14 1995
SAFETY	SEE DR/AT FORM	
DWVR	SEE DR/AT FORM	
QUAL ENGR	SEE DR/AT FORM	
LEAD ENGR	ML ALEXANDER	8-14 1995
REVIEW NO.	8	9-11 1995
APPROVED FOR IMPL/INC FOR DATE		
APPROVED FOR IMPLEMENTATION BY	C VAN KATWIJK	
FOR	WHC	DATE 10-13-95

U.S. DEPARTMENT OF ENERGY
M RICHLAND OPERATIONS OFFICE
ICF KAISER HANFORD COMPANY

ELECTRICAL POLE DETAILS & ELEVATIONS

PROJECT W-058, REPLACEMENT OF CROSS-SITE TRANSFER SYSTEM

SIZE	BLDG NO.	ENGRG NO.	DWG NO.	REV NO.
F	6241-A	8003	H-2-822523	1

SCALE	NONE	JOB NO.	CR1320	SHEET 2 OF 4

NUMBER	TITLE	NUMBER	TITLE
DRAWING TRACEABILITY LIST		NEXT USED ON	REFERENCES

MF	REV NO.	DESCRIPTION	REV BY DATE	KEH APPROVALS
S	1	a) INC ECN W-058-149 W-058 PROJECT TURNOVER	CLC 8-13 1997	mcb mcb mcb 11/21/97

REVISIONS

CAD FILE B822523B CAD CODE 2J:IBM:ACD2:12.0:NN XREFS N

PLOT CFG: POLY 2 PLOT SCALE: 1=1 KEHCAD 1

KEH 0350.00 (03/94) STRTX:ZIP: 199403030900