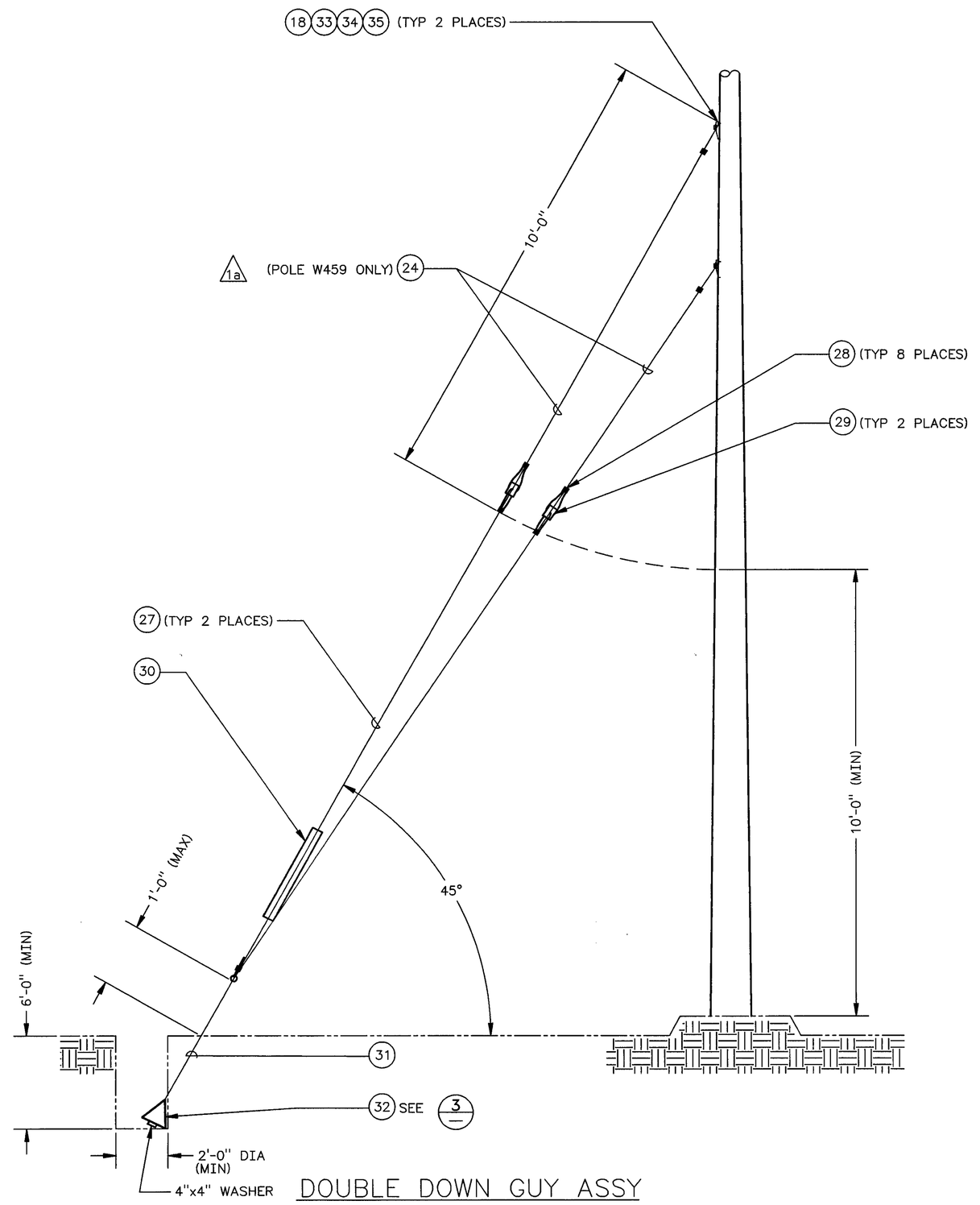

DOUBLE DOWN GUY ASSY

1 DETAIL
SH 2 & 3
(TYP FOR POLES NP1, NP2 & W459)
(SEE DOWN GUY SCHEDULE)

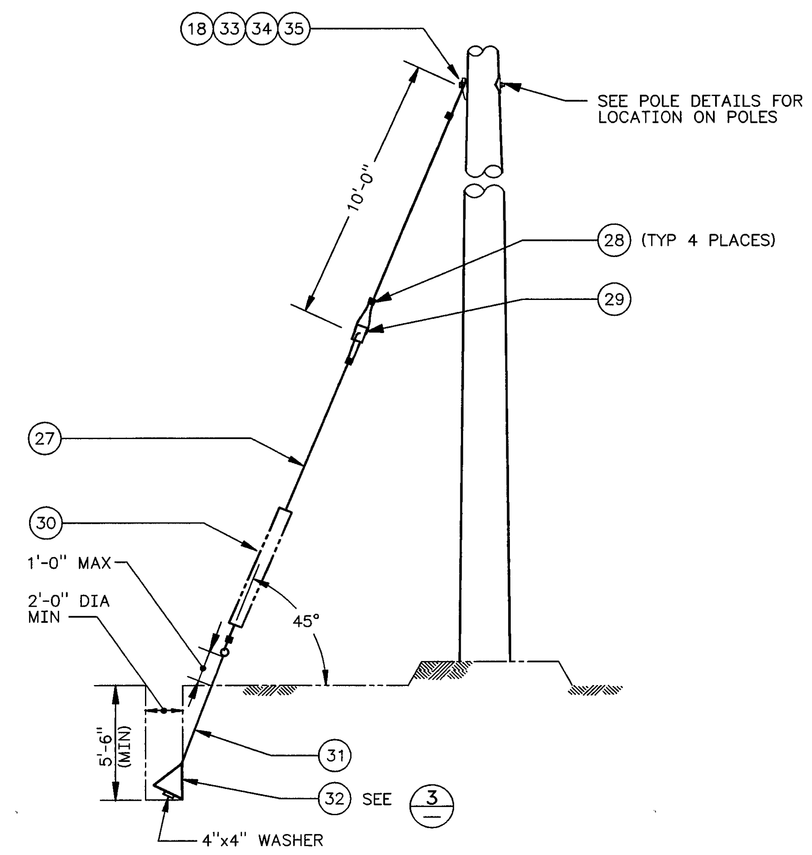

2 DETAIL
SH 1 & 2
(TYP FOR POLES W1301 & C8-L3-121-28)
(SEE DOWN GUY SCHEDULE)

SAG AND TENSION TABLE FOR NEW LINE C8L3 AND C8L4				
LENGTH OF RULING SPAN: 138 FEET				
AMBIENT TEMP IN DEG F	INITIAL		FINAL	
	SAG IN INCHES	TENSION IN POUNDS	SAG IN INCHES	TENSION IN POUNDS
0	3.7	704	3.8	692
15	4.5	585	4.7	559
30	5.6	469	6.1	432
45	7.3	361	8.2	318
60	9.8	268	11.4	230
75	13.1	200	15.2	173
90	16.7	157	18.9	139
105	20.2	130	22.4	117
120	23.5	112	25.6	103

DOWN GUY SCHEDULE			
POLE NUMBER	NO OF EXST DOWN GUYS	NO OF NEW DOWN GUYS	NO OF NEW DOUBLE DOWN GUYS
W1301	1	1	
NP1	2	*2	
C8-L3-121-28		1	
W459			1
665	2		
NP2			1

* SPAN GUY

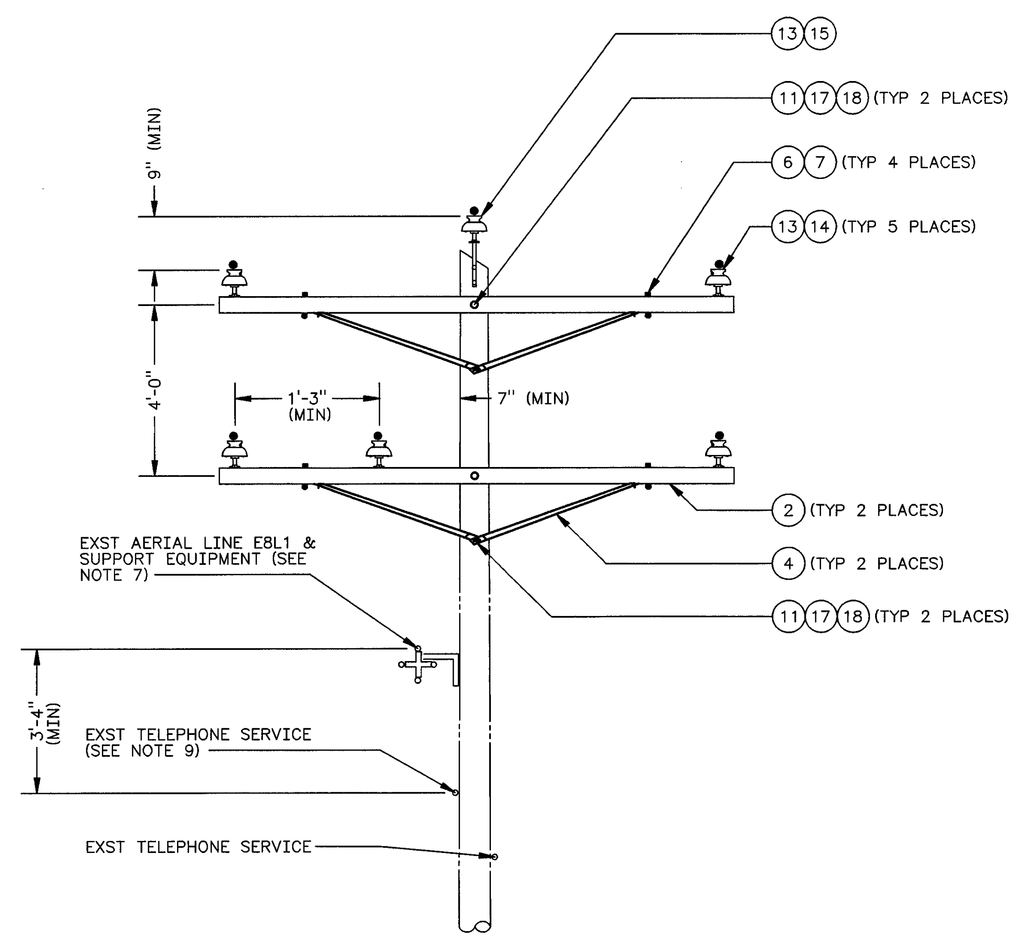

EXST POLE W471

H VIEW - NORTH
H-2-822522 SH 1
(TYP FOR POLES W471 THRU W473, W526 THRU W532)

NOTES:

1. SEE SHEET 1 FOR NOTES, REFERENCE DRAWINGS AND MATERIAL LIST.

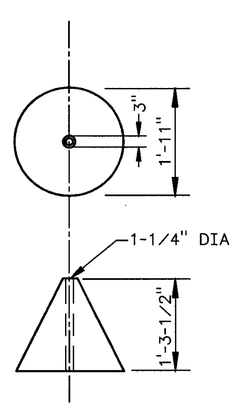

3 DETAIL

CONCRETE ANCHOR MINIMUM COMPRESSION STRENGTH; 3000 PSI AT 28 DAYS; AGGREGATE: 3/4" MAXIMUM

NUMBER	TITLE	NUMBER	TITLE
DRAWING TRACEABILITY LIST		NEXT USED ON	REFERENCES

REVISIONS					
MF	REV NO.	DESCRIPTION	REV BY DATE	KEH APPROVALS	APVD FOR IMPL/INC FOR DATE
	1	a) INC ECN W-058-149 W-058 PROJECT TURNOVER	CLC 8-13 1997	mb 8/14/97 mb 8/14/97	NRP 11/21/97

CAD FILE B822523D CAD CODE 2J:IBM:ACD2:12.0:NN XREF'S N

EXPIRES 05/30/99

DESIGNED GL AVERY	DATE	SAFETY CLASS 3	USE CONSTRUCTION
DSGN ENGR ML ALEXANDER	8-14 1995		EDT 612958
CHECKED GP McDONALD	8-14 1995	U.S. DEPARTMENT OF ENERGY	
SAFETY SEE DR/AT FORM		M RICHLAND OPERATIONS OFFICE	
ENVIR SEE DR/AT FORM		ICF KAISER HANFORD COMPANY	
QUAL ENGR SEE DR/AT FORM		ELECTRICAL POLE DETAILS & ELEVATIONS	
LEAD ENGR ML ALEXANDER	8-14 1995		
REVIEW NO. 7	8-11 1995	PROJECT W-058, REPLACEMENT OF CROSS-SITE TRANSFER SYSTEM	
APPROVED FOR IMPLEMENTATION BY C VAN KATWIJK FOR WHC DATE 10-13-95		SIZE F / BLDG NO. 6241-A / INDEX NO. 8003 / DWG NO. H-2-822523	REV NO. 1
		SCALE NONE / JOB NO. CR1320	SHEET 4 OF 4

PLOT CFG: POLY 2 PLOT SCALE: 1=1 KEHCAD 1 KEH 0350.00 (03/94) STRTKEH: 199403030900