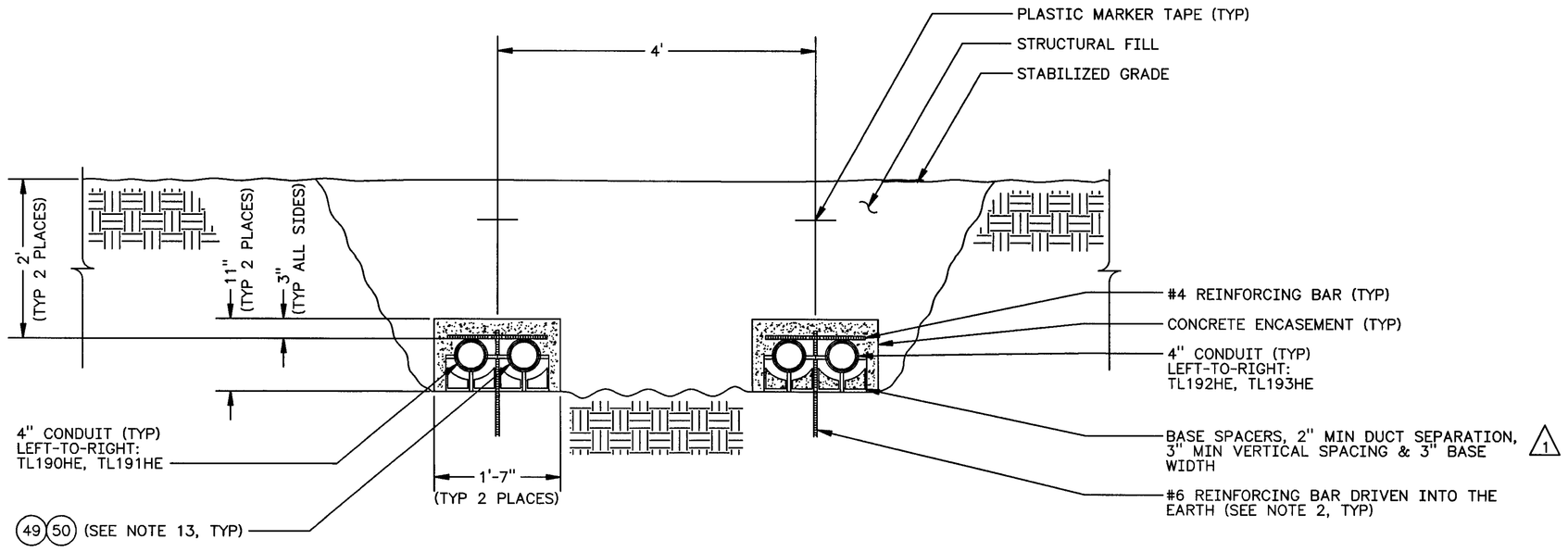

E SECTION
H-2-822522 SH 2

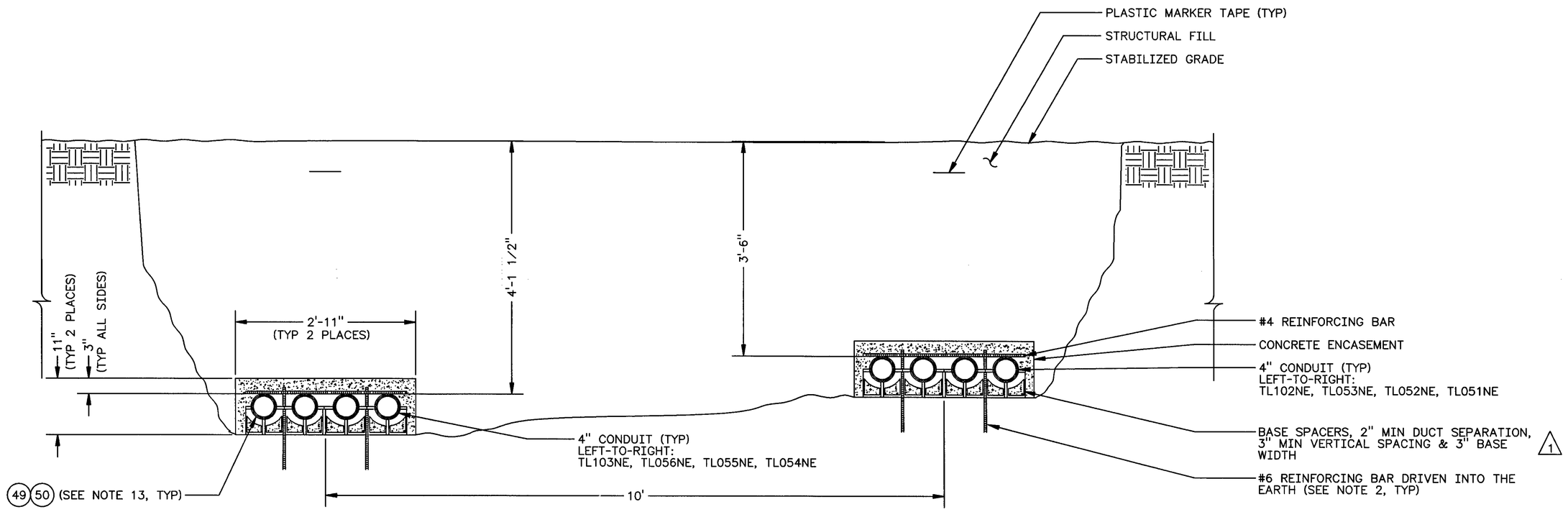

F SECTION
H-2-822522 SH 2

NOTES:

1. SEE SHEET 1 FOR NOTES AND REFERENCE DRAWINGS.

GREGORY P. McDONALD, STATE OF WASHINGTON, 20372, REGISTERED PROFESSIONAL ENGINEER
11-20-97 Rev 1
EXPIRES 05/30/99 M

DESIGNED	GL AVERY	DATE	SAFETY CLASS	3	USE	CONSTRUCTION	
DSGN ENGR	ML ALEXANDER	9-28 1995			EDT	612958	
CHECKED	GP McDONALD	9-28 1995	U.S. DEPARTMENT OF ENERGY RICHLAND OPERATIONS OFFICE ICF KAISER HANFORD COMPANY				
SAFETY	SEE DR/AT FORM						
ENVIR	SEE DR/AT FORM		ELECTRICAL ELEVATIONS & DETAILS				
QUAL ENGR	SEE DR/AT FORM						
LEAD ENGR	ML ALEXANDER	8-29 1995					
REVIEW NO.	5	9/7 1995	PROJECT	W-058, REPLACEMENT OF CROSS-SITE TRANSFER SYSTEM			
APPROVED FOR IMPLEMENTATION BY	C VAN KATWIJK		SIZE F	BLDG NO. 6241-A	INDEX NO. 7303 8001	DWG NO. H-2-822524	REV NO. 1
FOR	WHC	DATE 10-13-95	SCALE	1"=1'-0"	JOB NO. CR1320	SHEET 3 OF 4	

MF	REV NO.	DESCRIPTION	REV BY DATE	KEH APPROVALS	APVD FOR IMPL/INC FOR DATE
	1	PER ECN W-058-361 W-058 PROJECT TURNOVER	CLC 8-13 1997	mcb	MP 11/11/97

REVISIONS

NUMBER	TITLE	NUMBER	TITLE
DRAWING TRACEABILITY LIST		REFERENCES	
		NEXT USED ON	

CAD FILE B822524C CAD CODE 2J:IBM:ACD2:12.0:NN XREFS N

2 PLOT SCALE: 1=1 KEHCAD 1 1

KEH 0350.00 (03/94) STRTKEHF: 19940303.0900