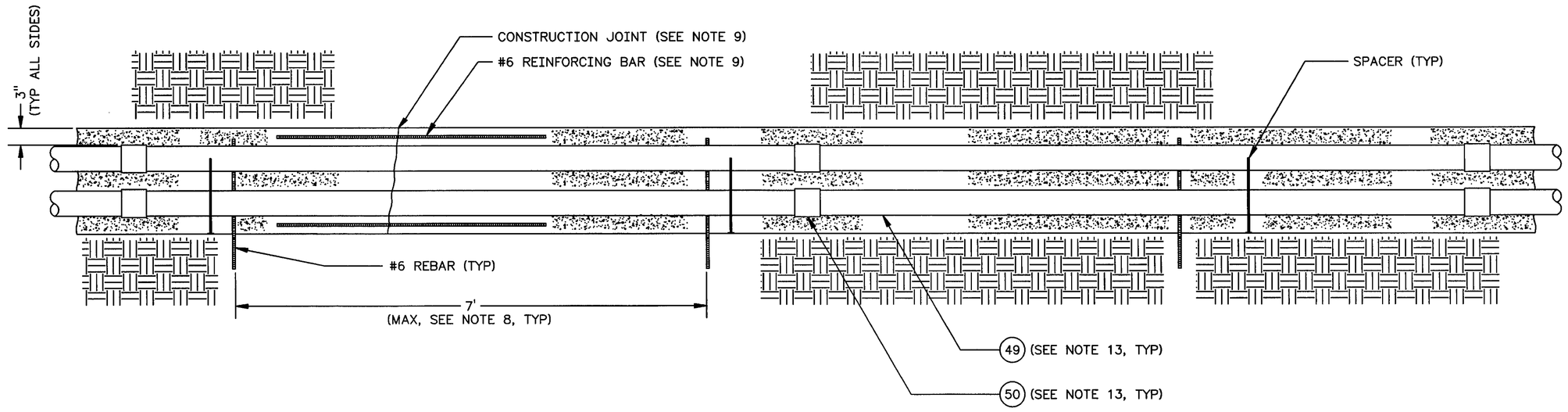

H SECTION

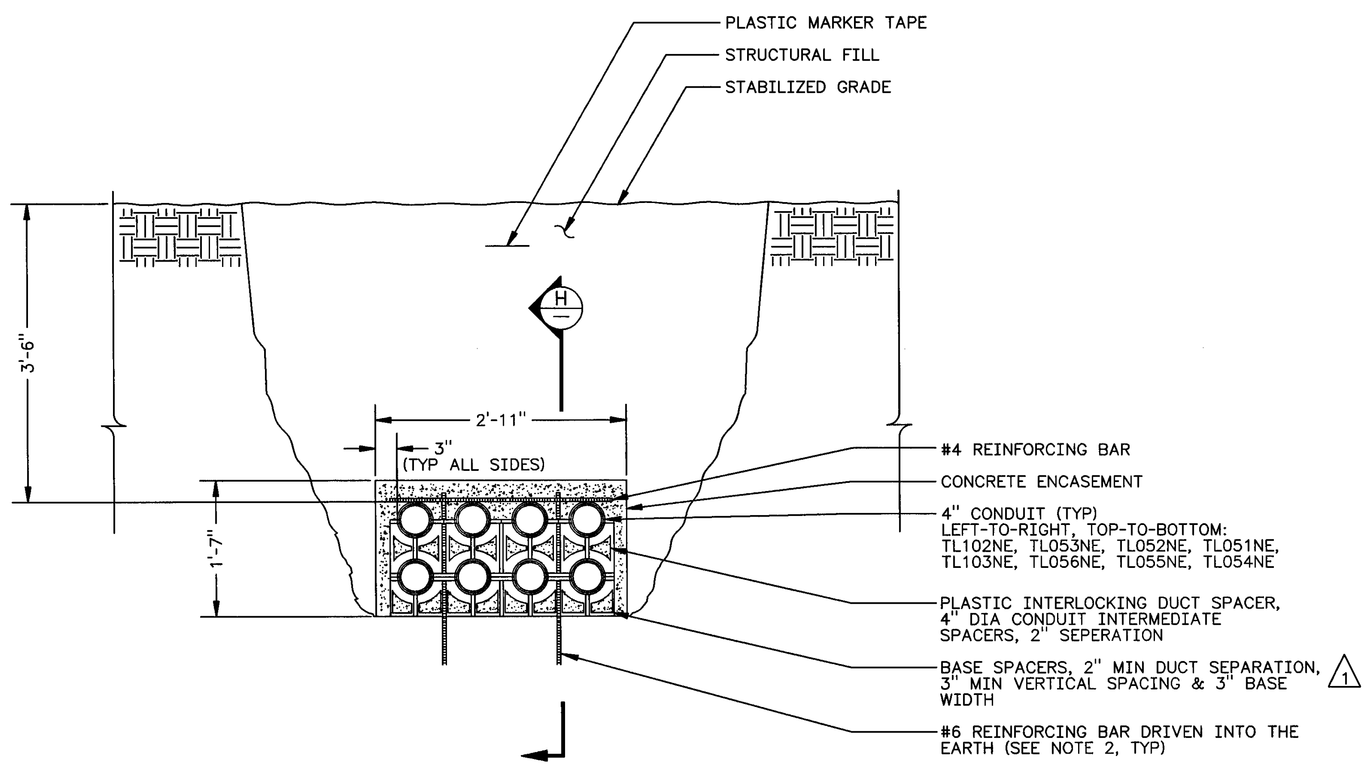

G SECTION
H-2-822522 SH 2

NOTES:

1. SEE SHEET 1 FOR REFERENCE DRAWINGS AND SHEETS 1 AND 2 FOR NOTES.

GREGORY P. McDONALD
STATE OF WASHINGTON
20372
REGISTERED
PROFESSIONAL ENGINEER
11-20-97
Rev 1

EXPIRES 05/30/99 M

DESIGNED	GL AVERY	DATE	
DSGN ENGR	ML ALEXANDER	8-14 1995	
CHECKED	GP McDONALD	8-14 1995	
SAFETY	SEE DR/AT FORM		
ENVIR	SEE DR/AT FORM		
QUAL ENGR	SEE DR/AT FORM		
LEAD ENGR	ML ALEXANDER	8-14 1995	
REVIEW NO.	4	8-11 1995	
APPROVED FOR IMPLEMENTATION BY	C VAN KATWIJK		
FOR	WHC	DATE	10-13-95

SAFETY CLASS 3

USE CONSTRUCTION
EDT 612958

U.S. DEPARTMENT OF ENERGY
RICHLAND OPERATIONS OFFICE
ICF KAISER HANFORD COMPANY

ELECTRICAL
ELEVATIONS
& DETAILS

PROJECT W-058, REPLACEMENT OF CROSS-SITE TRANSFER SYSTEM

SIZE	BLDG NO.	INDEX NO.	DWG NO.	REV NO.
F	6241-A	7303 8001	H-2-822524	1

SCALE 1"=1'-0" JOB NO. CR1320 SHEET 4 OF 4

MF	REV NO.	DESCRIPTION	REV BY DATE	KEH APPROVALS	APVD FOR IMPL/INC FOR DATE
	1	PER ECN W-058-361 W-058 PROJECT TURNOVER	CLC 8-13 1997	mcd	11/21/97

REVISIONS

CAD FILE B822524D CAD CODE 2J:IBM:ACD2:12.0:NN XREFS N

NUMBER	TITLE

DRAWING TRACEABILITY LIST

NUMBER	TITLE

REFERENCES

NEXT USED ON

2 PLOT SCALE: 1=1 KEHCAD 1 1

KEH 0350.00 (03/94)
STRTKEHF: 19940303.0900