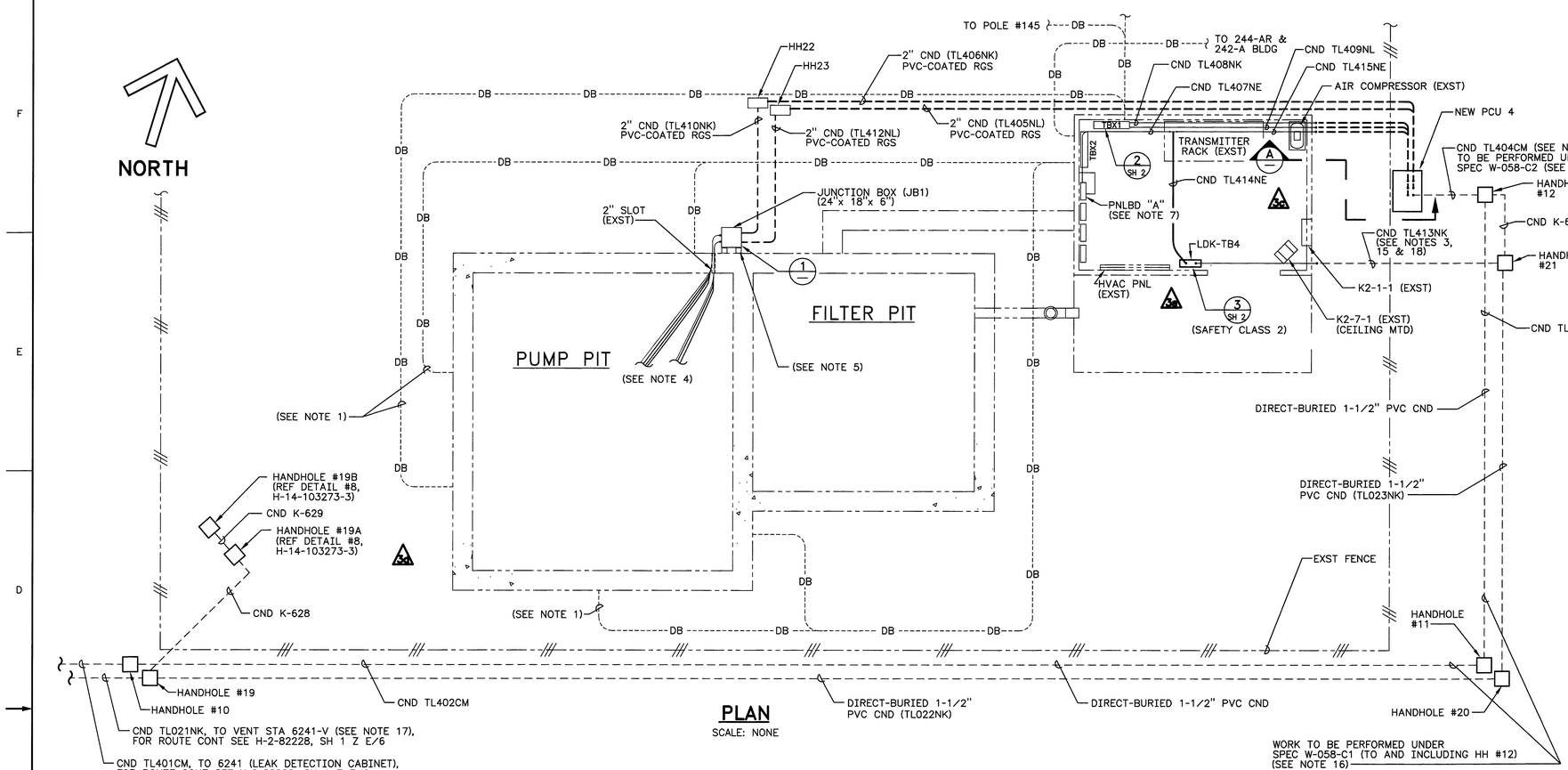

PLAN
SCALE: NONE

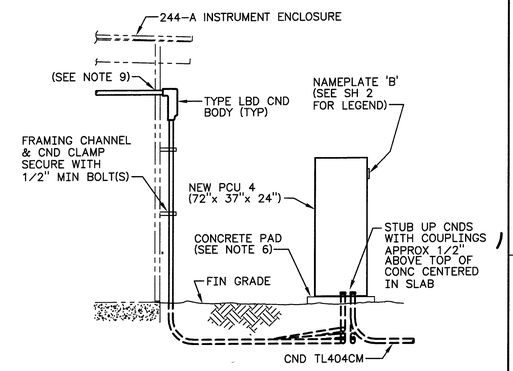

SECTION A
SCALE: NONE

NOTES:

1. EXACT LOCATION OF BURIED LINES MAY VARY FROM LOCATION SHOWN.
2. ALL CONDUIT RUNS ARE SHOWN DIAGRAMMATICALLY. EXACT ROUTING OF CONDUITS SHALL BE DETERMINED IN THE FIELD.
3. INSTALL 1-½" PVC COATED RGS CONDUIT A MINIMUM OF 24" DEEP.
4. ROUTE CONDUCTORS FROM NEW JUMPERS (SEE H-2-822322 AND H-2-822323) THROUGH EXISTING 2" SLOT ON PUMP PIT TO JB1 AND TERMINATE ON TERMINAL BLOCK(S).
5. ATTACH TWO APPROXIMATELY 52" LENGTHS OF FRAMING CHANNEL (P1000), CENTERED AS REQUIRED TO MATCH JUNCTION BOX MOUNTING LUGS, WITH 3/8"Ø EXPANSION ANCHORS (MIN EMBED DEPTH 2-1/2" AND 4 EA PER CHANNEL EQUALLY SPACED) TO NORTH SIDE OF PUMP PIT (WITH MIN 24" OF EACH CHANNEL BELOW GRADE). ATTACH MOUNTING LUGS OF JUNCTION BOX (O-Z GEDNEY, YW-241806-72T) TO CHANNEL AS CLOSE TO GRADE AS PRACTICAL. ALL UNDERGROUND COMPONENTS SHALL BE HOT-DIPPED GALVANIZED STEEL. TB3 TO HAVE 12 TYPE K THERMOCOUPLE TERMINALS.
6. SEE DRAWING H-2-822228, SH 1 FOR CONCRETE PAD DETAIL.
7. PANELBOARD A, CIRCUIT 9: REPLACE EXISTING 20A, 1 POLE CKT BRKR WITH A 30A, 1 POLE CKT BRKR COMPATIBLE WITH PANELBOARD.
8. ROUTE CONNECTIVITY PROBE CONDUCTORS, (3/C #14, TRAY CABLE) FROM NEW JUMPER (SEE H-14-104022) THROUGH EXISTING 2" SLOT IN PUMP PIT TO JB1 AND TERMINATE ON TERMINAL BLOCK TB1, SEAL AND STRAIN RELIEF CONDUCTORS AT JB1 USING APPROX. SIZED SEAL-OFF FITTING & CGB FITTING, SEE DETAIL 1.
9. SEAL CONDUIT PENETRATIONS PER SPECIFICATION W-058-C2.
10. ALL EXPOSED CONDUIT TO BE GALVINIZED RIGID STEEL, ALL UNDERGROUND CONDUIT TO BE PVC-COATED RGS.
11. DISCONNECT EXISTING SIGNAL WIRES E/I-EXH-1, E/I-EXH-2, CVT-EXH-1, CVT-EXH-2, SGT-TK-1, SGT-TK-2, WFT-TK-1, WFT-TK-2, SGT-A-1, SGT-A-2, WFT-A-1, WFT-A-2 AND ASSOCOATED SHIELDS AND TERMINATE TO NEW TERMINAL BLOCK TB-1. INSTALL NEW SHIELDED PAIRS FROM EXISTING TERMINAL BLOCKS TO NEW TERMINAL BLOCK TB-1.
12. FOR MATERIAL DESCRIPTION AND INSTALLATION INSTRUCTIONS, SEE CONSTRUCTION SPECIFICATION W-058-C1, OR CONSTRUCTION SPECIFICATION W-058-C2.
13. USE EXISTING DIRECT-BURIED SPARE CONDUCTORS BETWEEN TBX-1 (ON NORTH SIDE OUTSIDE WALL OF 242-A) AND THE INSTRUMENT BLDG (TBX-1) OF THE 244-A LIFT STATION.
14. THE LAST TWO DESIGNATORS OF RACEWAY NUMBERS REPRESENTS THE FOLLOWING:
    NE - NORMAL POWER
    NK - NORMAL CONTROL (ABOVE 50 VOLTS)
    NL - NORMAL INSTRUMENT (50 VOLTS AND BELOW)
    CM - COMMUNICATION
15. INSTALL CND TL413NK INTO BUILDING SIMILAR TO SECTION "A" AND ROUTE TO LDK-TB4.
16. SPEC W-058-C1 TO FURNISH AND INSTALL PVC CND SYSTEM AND HANDHOLES UP TO AND INCLUDING HH #12. SPEC W-058-C2 TO INSTALL CONDUIT FROM HH #12 TO PCU-4, INSTALL CND/BOXES AND PULL CABLE INSIDE FENCED AREA AT 244-A AND PITS. INSTALL PCU-4, PULL FIBER OPTIC CABLE COILED BY SPEC W-058-C3 AT HH #12 TO PCU-4, AND TERMINATE PCU-4 WIRING. SPEC W-058-C3 TO FURNISH PCU-4 AND PULL FIBER OPTIC CABLE TO HH #12 AND COIL SUFFICIENT LENGTH OF CABLE TO REACH PCU-4.
17. SPEC W-058-C1 TO FURNISH AND INSTALL PVC CND SYSTEM AND HANDHOLES UP TO AND INCLUDING HH #21. SPEC W-058-C2 TO INSTALL CONDUIT FROM HH #21 TO LEAK DETECTION RELAY BOX (LDK-TB4). INSTALL LEAK DETECTOR RELAY BOX, PULL LEAK DETECTION RELAY CABLE COILED BY SPEC W-058-C3 AT HH #21 TO RELAY BOX AND TERMINATE RELAY CABLE ON RELAYS. SPEC W-058-C3 TO FURNISH LEAK DETECTION RELAY BOX INCLUDING RELAYS AND PULL RELAY CABLE TO HH #21 AND COIL SUFFICIENT LENGTH OF CABLE TO REACH RELAY BOX.
18. INSTALL LIQUIDTIGHT METAL CONDUIT LENGTH BEFORE ENTERING LDK-TB4.

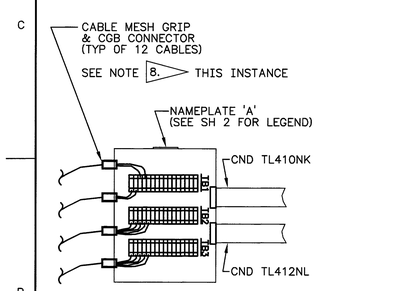

DETAIL 1
SCALE: NONE

JUNCTION BOX JB1
NOTE: CUT JUMPER CABLES AS REQD TO TERMINATE CONDUCTORS (NOT ALL CABLES ARE SHOWN)

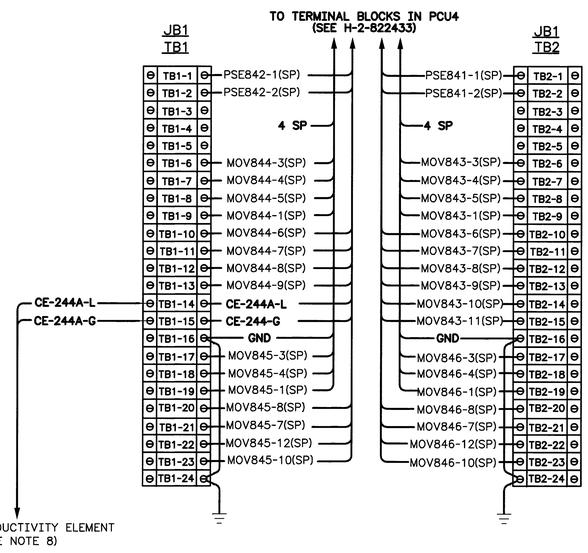

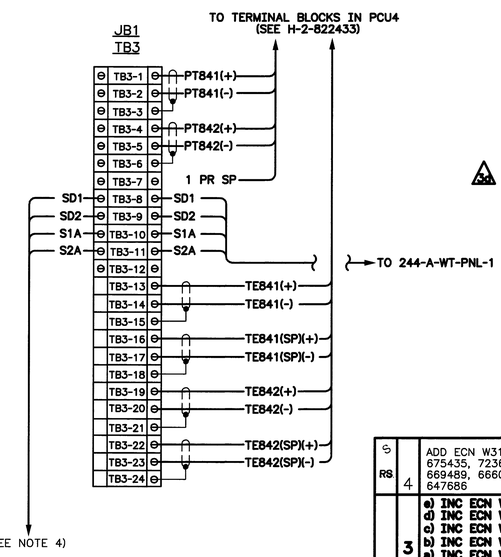

REV NO.	DESCRIPTION	REV BY DATE	KEH APPROVALS
4	ADD ECN W314-4K-171-R0, 675435, 723693-R0, 669488, 666029, 657063, 647686	GJK 03/06	
3	a) INC ECN W-058-285 d) INC ECN W-058-184 c) INC ECN W-058-137 b) INC ECN W-058-96 a) INC ECN W-058-72 PER f) ECN W-058-361 & W-058 PROJECT TURNOVER	GJK 02-13 1997	
2	W-058-25 ALSO INCORP ECN W-058-16 & ECN GENERAL REV PER ECN W-058-37	GJK 3/6 7/95	CTI MLA
1	REVISE PER ECN W-058-7	GJK 9/28 1995	CTI CDE RLN MLA GLP 9-28-95

NUMBER	TITLE
H-14-101193-5	ELEC PWR & CONTROL MPS LIFT STA PLAN
H-7-1275	SYMBOL LIST
H-2-822200	DRAWING LIST

DRAWING TRACEABILITY LIST — NEXT USED ON

CAD FILE — CAD CODE — XREFS N

APVD FOR IMPL/ISC FOR DATE 7-18 1995

DESIGNED CL CLOUD 7/25 1995
DSGN ENGR BJ GRAF 7/25 1995
CHECKED CT INAMINE 7/25 1995
SAFETY SEE DR/AT FORM
DRVR SEE DR/AT FORM
QUAL ENGR SEE DR/AT FORM
LEAD ENGR ML ALEXANDER 7/25 1995
REVISION NO. 11

APPROVED FOR IMPLEMENTATION BY GL PARSONS FOR WHC DATE 7/25/95

SAFETY CLASS 2 — EDT 612950 — USE CONSTRUCTION

M U.S. DEPARTMENT OF ENERGY
Office of River Protection

ELECTRICAL PLAN, SECTION & DETAIL

PROJECT W058 REPLACEMENT OF CROSS SITE TRANSFER SYSTEM

SIZE F — BLDG NO. 244A — INDEX NO. 7301 7501 7601 — DWG NO. H-2-822534 — REV NO. 4
SCALE SHOWN — JOB NO. CR1320 — SHEET 1 OF 2

DATE: MAR 31 2006 — STA 4 — HANFORD RELEASE — ID 2

KEH 0350.00 (03/94)

21655 — PLOT SCALE: 1=1 — KEHCAD