WIRE RUN LIST

WIRE RUN NUMBER	NO. OF WIRES	TYPE	FROM	VIA	TO	WIRE NUMBERS
LS001	1-12/C 1-12/C	#14 AWG (A) #14 AWG (A)	JB1	TL412NL, HH23, TL405NL	PCU4	MOV843-6, -7, -8, -9, -10, -11, MOV846-7, -8, -10, -12; PSE841-1, -2 CE-244A-L, CE-244A-G, MOV844-6, -7, -8, -9
LS002	3-1/C	#10 AWG (D)	PANELBOARD "A"	TL407NE, TL415NE	PCU4	PPA-9H, -9N, GND
LS003	1-12PR	#16 AWG (B)	TBX-1	TL409NL	PCU4	SGT-A-1I, -2I, SH; SGT-A-1, -2, SH, WFT-A-1I, -2I, SH; WFT-A-1, -2, SH; E/I-EXH-1I, -2I, SH; E/I-EXH-1, -2, SH; CVT-EXH-1I, -2I, SH; CVT-EXH-1, -2, SH; SGT-TK-1I, -2I, SH; SGT-TK-1, -2, SH; WFT-TK-1I, 2I, SH; WFT-TK-1, -2, SH
LS004	1-12/C	#14 AWG (A)	TBX-1	TL408NK	PCU4	PPA-9-H2, -5, -6, ANN-H, ANN-45, ANN-H, ANN-41, C6C-60, C6-N, P244A1-6, -X2, GND
LS005	1-12/C 1-12/C	#14 AWG (A) #14 AWG (A)	JB1	TL410NK, HH22, TL406NK	PCU4	MOV843-1, -3, -4, -5, MOV846-1, -3, -4, GND, 4 SP MOV844-1, -3, -4, -5, MOV845-1, -3, -4, GND, 4 SP
LS006	1-3PR	#16 AWG (B)	JB1	TL412NL, HH23, TL405NL	PCU4	PT841(-), PS4(+), SH; PT842(-), PS4(+), SH; 1SP PR
LS007	1-4PR	#20 AWG (C)	JB1	TL412NL, HH23, TL405NL	PCU4	TE841(+), (-), SH; TE841(SP)(+), (SP)(-), SH; TE842(+), (-), SH; TE842(SP)(+), (SP)(-), -SH
LS008	3-1/C	#12 AWG (D)	PCU4	TL415NE, TL414NE	LEAK DET BOX	PPA-9H1, -9N1, GND

NAMEPLATE LEGEND

NAMEPLATE DESIGNATER	ENGRAVING		
	FIRST LINE	SECOND LINE	THIRD LINE
A	JUNCTION BOX	JB1	TERMS TB1, TB2 & TB3
B	PCU-4	FED FROM PNLBD 'A'	——
C	LDK-TB4	6241-A & 6241-V	LK DET ALM RLYS
D	K-VS-4		
E	K-DB-4		

CONDUIT SCHEDULE

CND NUM	CND SIZE	WIRE RUN NUMBERS
TL405NL	2"	LS001, LS006, LS007
TL406NK	2"	LS005
TL407NE	3/4"	LS002
TL408NK	1"	LS004
TL409NL	1 1/2"	LS003
TL410NK	2"	LS005
TL412NL	2"	LS001, LS006, LS007
TL414NE	3/4"	LS008
TL415NE	3/4"	LS002, LS008

(SEE NOTE 10)

(SEE NOTE 18)

(A) TYPE TC THHN/THWN INSULATION - PVC JACKET, COPPER CONDUCTORS, 600 VOLT, 90° C.

(B) TYPE TC PVC INSULATION, MULTIPLE INDIVIDUAL SHIELDED PAIRS, WITH OVERALL SHIELD, PVC JACKET, 600 VOLT, 90° C.

(C) TYPE PLTC PVC INSULATION - TYPE KX THERMOCOUPLE EXTENSION CABLE, PVC JACKET, MULTIPLE INDIVIDUAL SHIELDED PAIRS WITH OVERALL SHIELD, 300 VOLT, 105° C.

(D) TYPE THHN/THWN BUILDING WIRE, COPPER CONDUCTORS, STRANDED, 600 VOLT, 90° C.

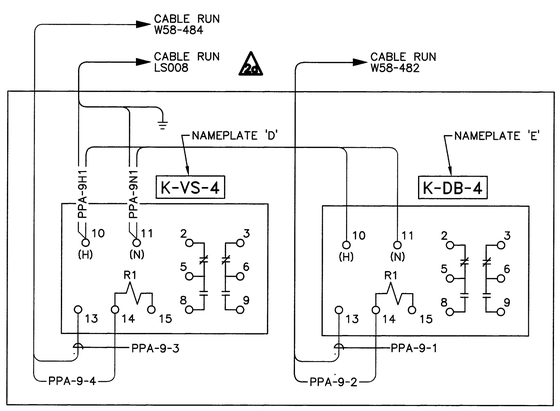

LEAK DETECTION WIRING DIAGRAM
(SAFETY CLASS 2)
LDK-TB4

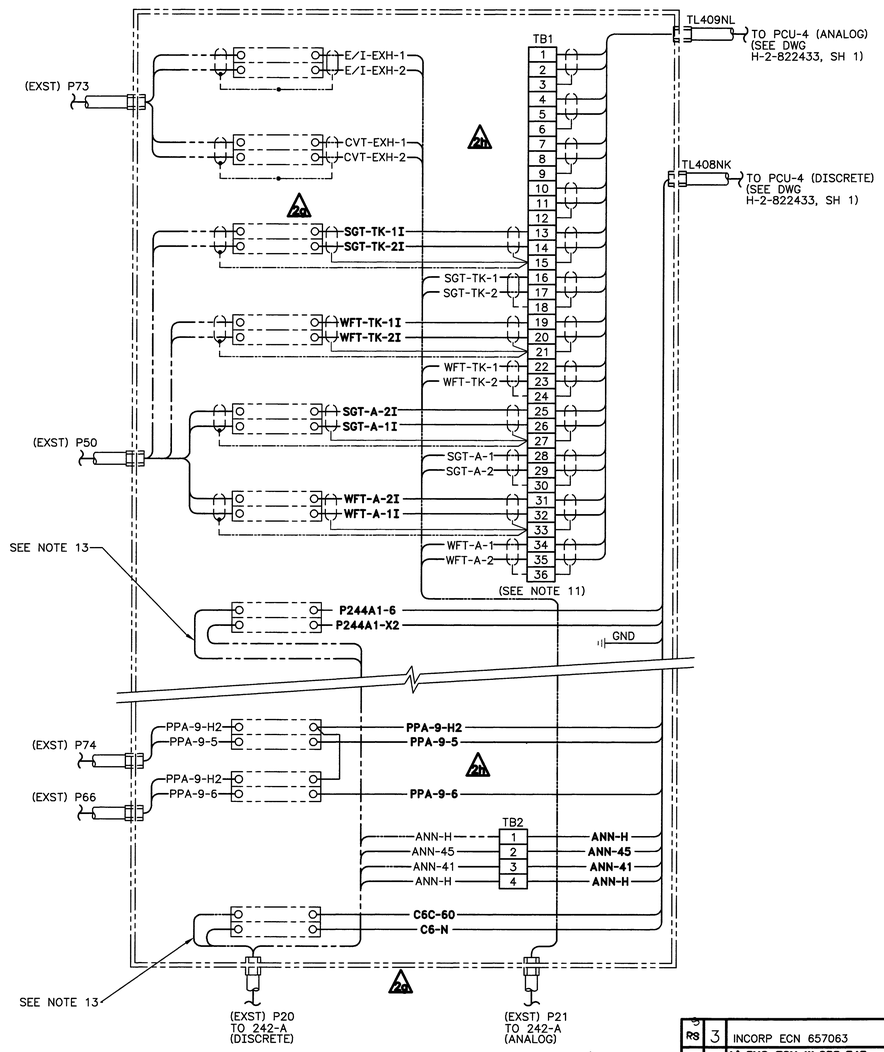

2 SH 1 DETAIL (TERMINAL BOX TBX-1)
SCALE : NONE
SHOWN WITH FRONT COVER REMOVED
SEE H-2-38210 FOR EXST CONDUITS

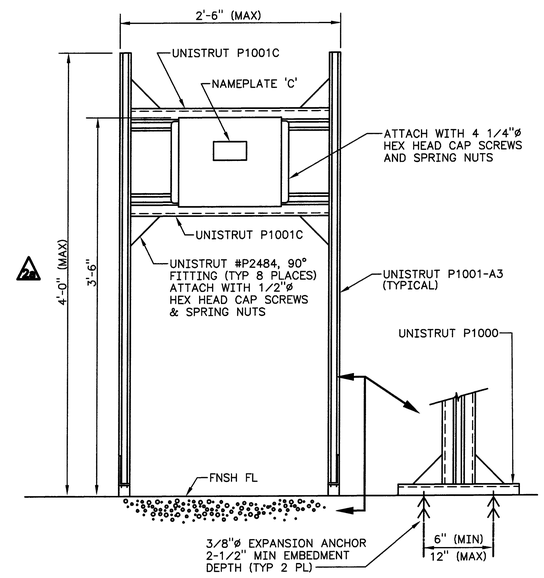

3 SH 1 DETAIL (SAFETY CLASS 2)
SCALE : NONE

SEE SHEET 1 FOR NOTES

DATE MAR 31 2006 STA 4 MANFORD ID 2

REV					
RS	3	INCORP ECN 657063	JJJ 1/06		
	2	h) INC ECN W-058-343 g) INC ECN W-058-329 f) INC ECN W-058-313 e) INC ECN W-058-287 d) INC ECN W-058-184 c) INC ECN W-058-137 b) INC ECN W-058-96 a) INC ECN W-058-72 W-058 PROJECT TURNOVER	GLG 6-13 1997		
M	1	ECN W-058-37 GENERAL REVISION PER	GJK 2/5 /95	CTI	MLA

REV NO.	DESCRIPTION	REV BY DATE	KEH APPROVALS	APVD FOR IMPL/INC FOR DATE
	REVISIONS			

CAD FILE | CAD CODE | XREFS N

NUMBER	TITLE	NUMBER	TITLE
DRAWING TRACEABILITY LIST		REFERENCES	
		H-2-822200	DRAWING LIST
		NEXT USED ON	

DESIGNED BJ GRAF	DATE	SAFETY CLASS 2	USE CONSTRUCTION
DSGN ENGR BRAD J GRAF	7/13 1995		EDT 612961
CHECKED CT INAMINE	7/14 1995	U.S. DEPARTMENT OF ENERGY Office of River Protection	
SAFETY SEE DR/AT FORM			
ENVIR SEE DR/AT FORM		ELECTRICAL WIRE RUN & TERMINATION	
QUAL ENGR SEE DR/AT FORM			
LEAD ENGR ML ALEXANDER	7/14 1995		
REVIEW NO. 10	7/13 1995	PROJECT W058 REPLACEMENT OF CROSS-SITE TRANSFER SYSTEM	
APPROVED FOR IMPLEMENTATION BY C VAN KATWIJK FOR WHC DATE 7/25/95		SIZE F / SLDG NO. 244A / INDEX NO. 7502 7505 / DWG NO. H-2-822534 / REV NO. 3	
		SCALE NONE / JOB NO. CR1320 / SHEET 2 OF 2	

DWG NO H-2-822534 SH 2 OF 2 REV 3

31786 2 PLOT SCALE: 1=1 KEHCAD

KEH 0350.00 (03/94)