NOTE:
1. MECHANICAL HVAC EQUIPMENT ON OR AROUND BUILDING MAY NOT BE SHOWN FOR CLARITY.
2. DAMPPROOFING SHALL BE APPLIED TO THE CORRIDOR AND DIVERSION BOX BELOW GRADE AND ABOVE GRADE AT CORRIDOR WHERE SHOWN.
3. PERIMETER INSULATION SHALL BE APPLIED TO 3'-0 BELOW GRADE AT CORRIDOR ONLY.

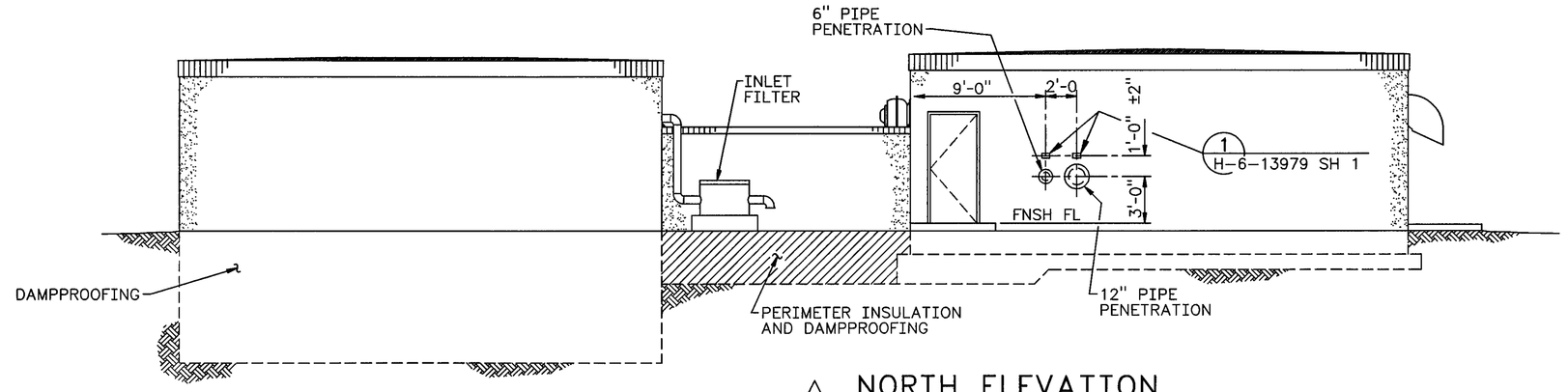

NORTH ELEVATION
3/16" = 1'-0"

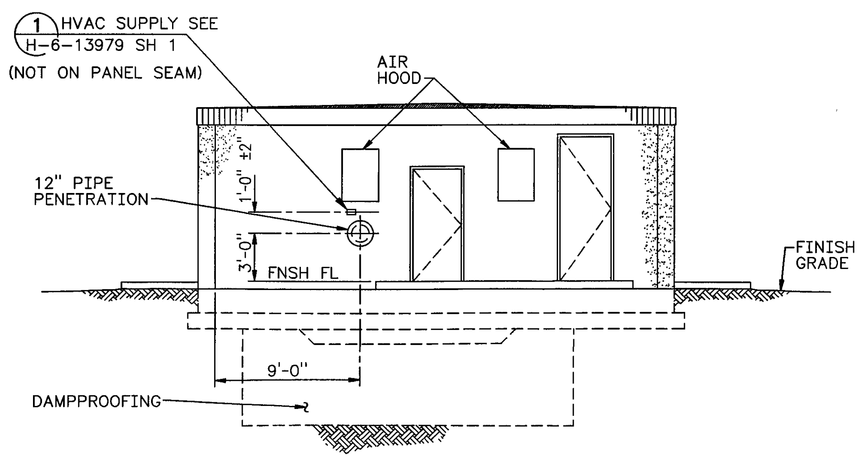

WEST ELEVATION
3/16" = 1'-0"

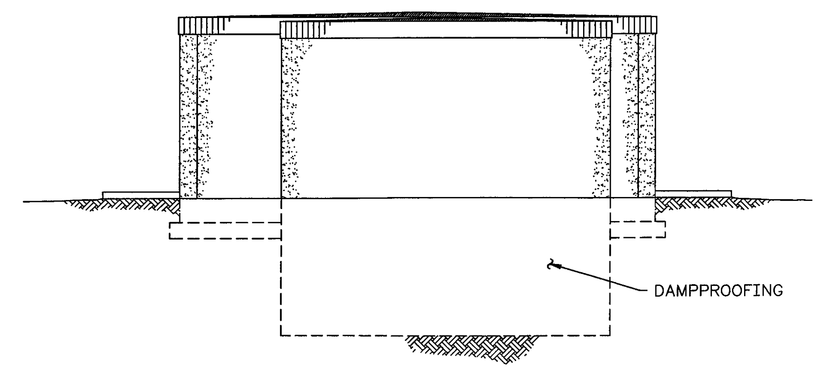

EAST ELEVATION
3/16" = 1'-0"

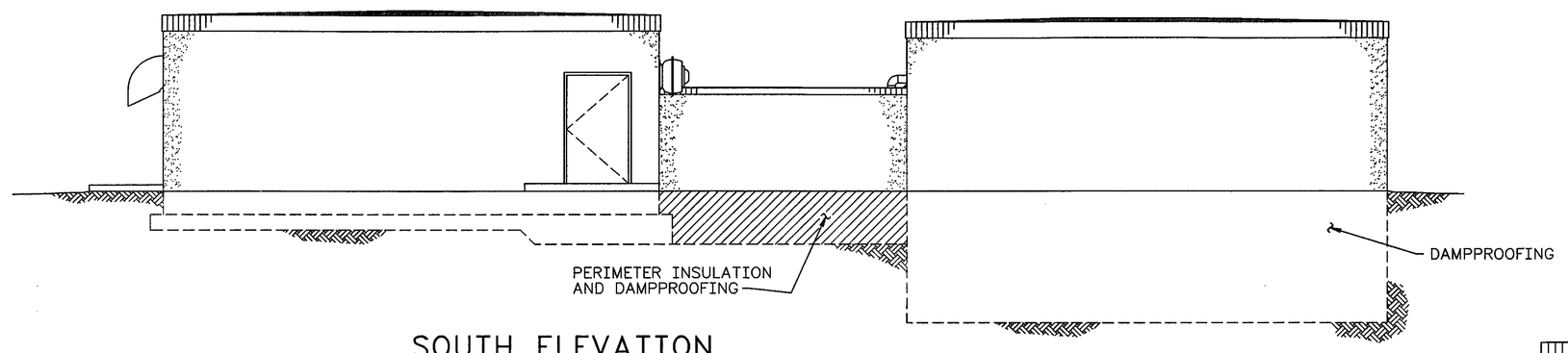

SOUTH ELEVATION
3/16" = 1'-0"

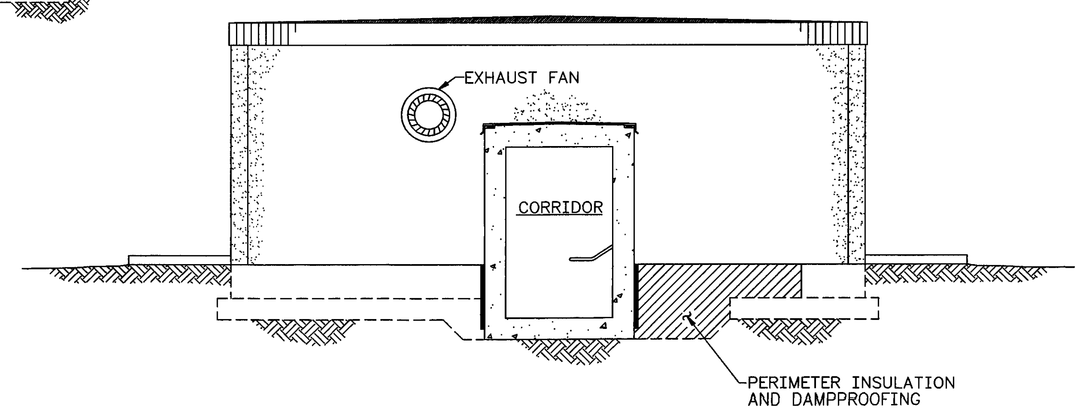

A SECTION
H-6-13979, SH1 1/4" = 1'-0"

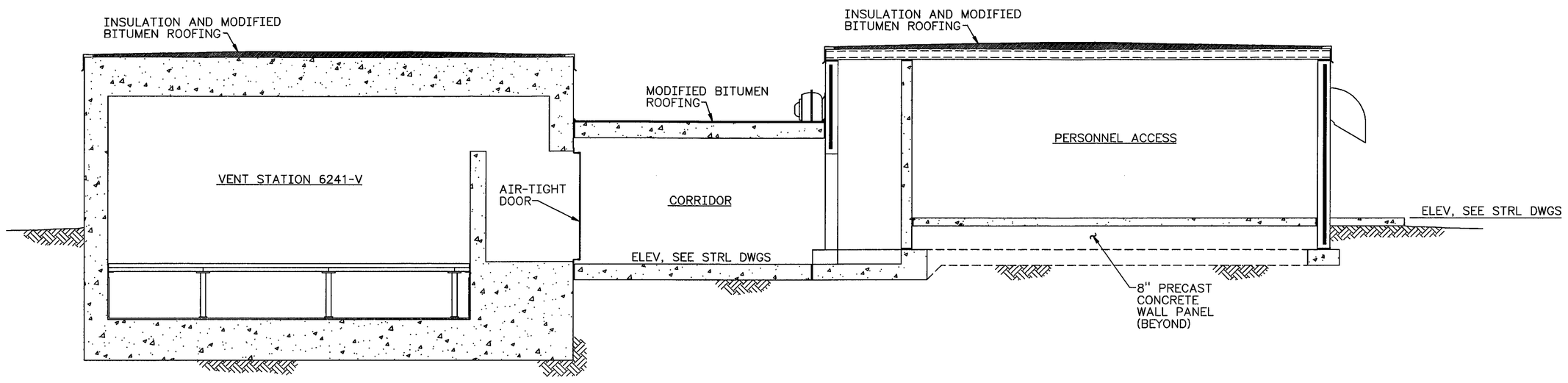

B SECTION
H-6-13979, SH1 1/4" = 1'-0"

3930 REGISTERED ARCHITECT WILLIS D. LINDHOLM STATE OF WASHINGTON

For Rev 1 Expire 2/2/98

		H-2-822200	DRAWING LIST				
NUMBER	TITLE	NUMBER	TITLE	MF	REV NO.	DESCRIPTION	REV BY DATE	KEH APPROVALS	APVD FOR IMPL/INC FOR DATE
DRAWING TRACEABILITY LIST		REFERENCES			1	INCORP ECN W-058-81 W-058 PROJECT TURNOVER AND	P LADIG 7/17/97	WRC 11/12/98	11/20/97
		NEXT USED ON			REVISIONS				

CAD FILE F013979C CAD CODE 2J:IBM:ACD2:12.0:NN XREFS N

DESIGNED	DL GARLAND	DATE	
DSGN ENGR	LR LaDOUCEUR	10/5 1995	
CHECKED	KEN LARSON	10/5 1995	
SAFETY	SEE DR/AT FORM		
ENVIR	SEE DR/AT FORM		
QUAL ENGR	SEE DR/AT FORM		
LEAD ENGR	JR COLLINS	10/6 1995	
REVIEW NO.	9	10-6 1995	

APPROVED FOR IMPLEMENTATION BY CARL VAN KATWIJK FOR WHC DATE 10/13/95

SCM PROJECT NO. 3694.020 USE CONSTRUCTION
SAFETY CLASS 3 EDT

U.S. DEPARTMENT OF ENERGY
RICHLAND OPERATIONS OFFICE
ICF KAISER HANFORD COMPANY

ARCHITECTURAL
VENT STATION 6241-V
ELEVATIONS AND SECTIONS

PROJECT W058, REPLACEMENT OF CROSS-SITE TRANSFER SYSTEM

SIZE	BLDG NO.	INDEX NO.	DWG NO.	REV NO.
F	6241-V	0801	H-6-13979	1

SCALE SHOWN JOB NO. CR1320 SHEET 3 OF 3

PLOT SCALE: 1=48 KEHCAD

KEH 0350.00 (03/94) STRTKEHF: 199403030900