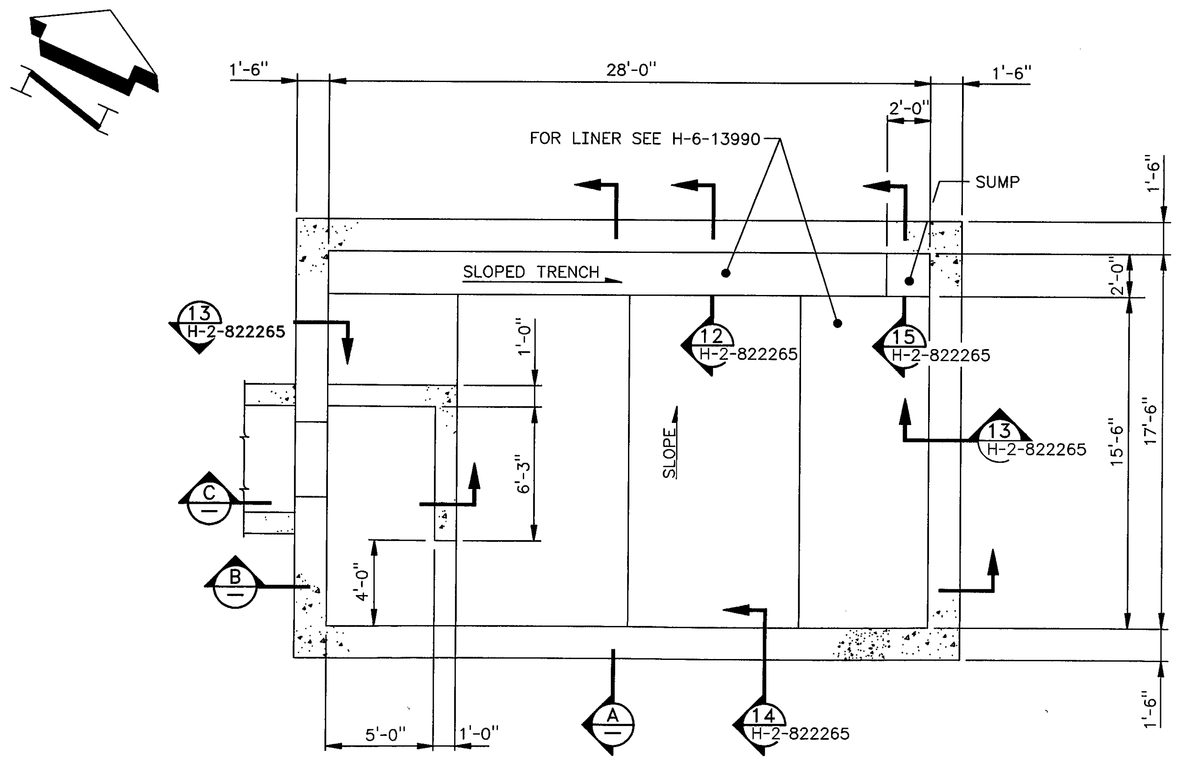

CONCRETE FLOOR PLAN

SCALE: 1/4" = 1'-0

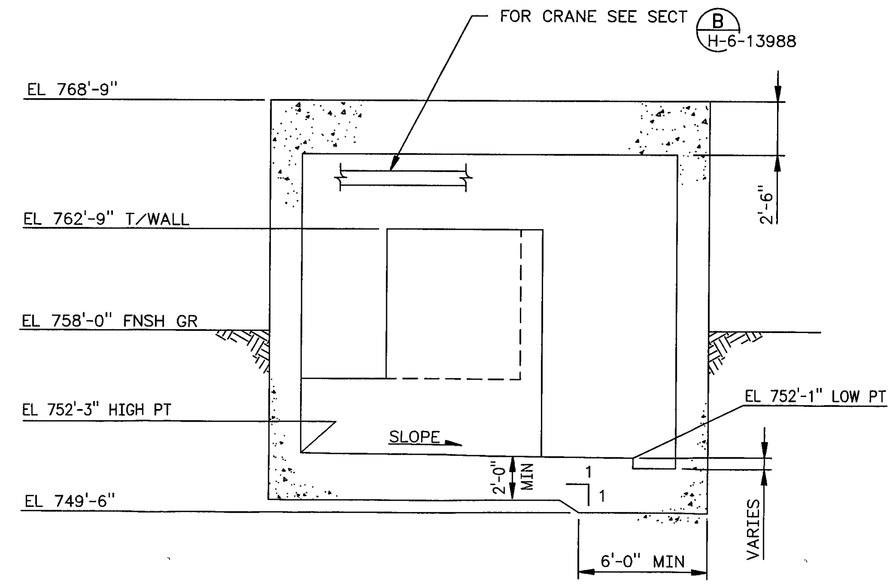

A SECTION

SCALE: 1/4" = 1'-0

LINER NOT SHOWN FOR CLARITY

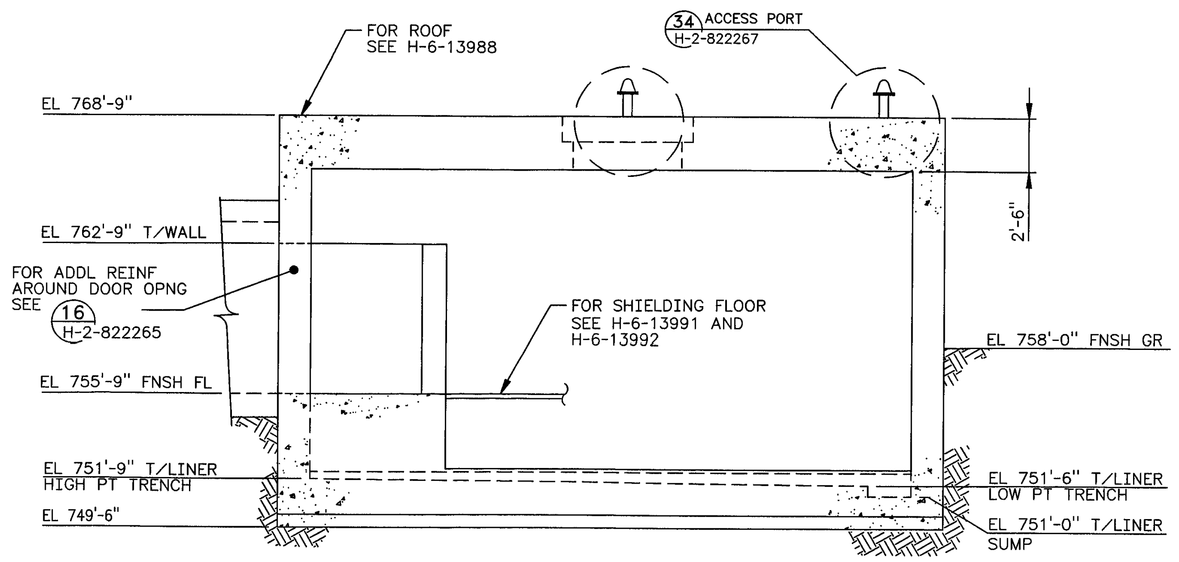

B SECTION

SCALE: 1/4"= 1'-0"

LINER NOT SHOWN FOR CLARITY

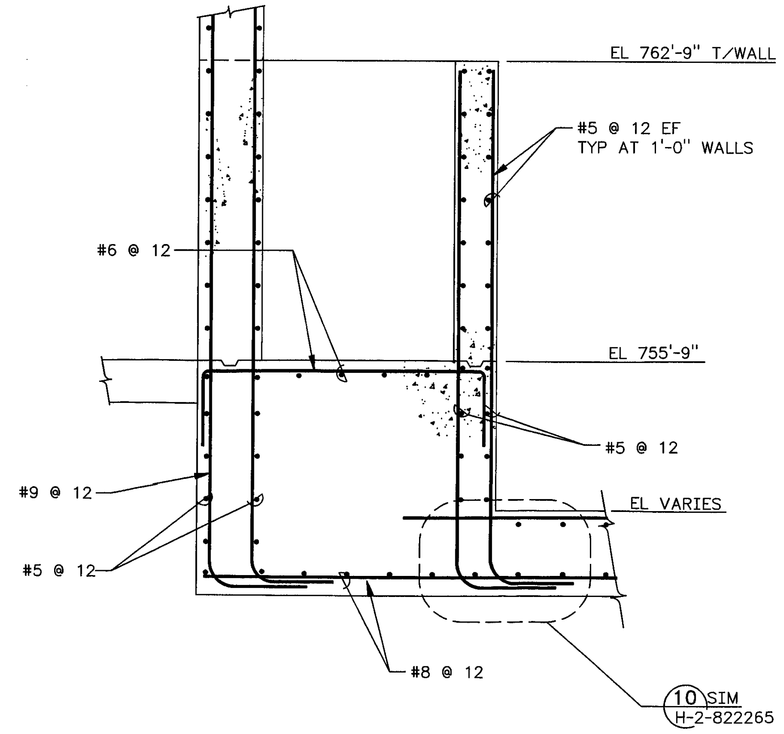

3 C SECTION

SCALE: 1/2" = 1'-0

LINER NOT SHOWN FOR CLARITY

NOTES

1. FOR STRUCTURAL GENERAL NOTES SEE H-2-822265

STATE OF WASHINGTON — STANLEY S. LANGEVIN — 23814 — REGISTERED PROFESSIONAL ENGINEER — 11/13/97

EXPIRES: 7/1/99

S	3	INCORP ECN W-058-106 W-058 PROJECT TURNOVER AND	P LANG 11/10/97		11/13/97	11/20/97
M	2	REVISE PER ECN W-058-69	ASL P LANG 7/15/96	ASL 7/26/97	7/26/97	JCH 7/30/97	CVK 7/30/97
M	1	W-058-29 REVISE PER ECN W-058-20 &	DTC P LANG 2/15/96	ASL 2/23/96	ASL 2/23/96	CVK 3/13/96

REV NO.	DESCRIPTION	REV BY DATE	KEH APPROVALS	APVD FOR IMPL/INC FOR DATE
	REVISIONS			

NUMBER	TITLE
	DRAWING TRACEABILITY LIST

NUMBER	TITLE
H-2-822200	DRAWING LIST
	REFERENCES
NEXT USED ON	

CAD FILE F013987A — CAD CODE 2J:IBM:ACD2:12.0:NN — XREF'S N

DESIGNED	B HOLLENBECK	DATE	
DSGN ENGR	DT CHOU	8/14 1995	
CHECKED	ANN S LANGEVIN	8/14 1995	
SAFETY	SEE DR/AT FORM		
ENVIR	SEE DR/AT FORM		
QUAL ENGR	SEE DR/AT FORM		
LEAD ENGR	ANN S LANGEVIN	8/14 1995	
REVIEW NO.	8	8/24 1995	

APPROVED FOR IMPLEMENTATION: BY CARL VAN KATWIJK FOR WHC DATE 10/13/95

USE CONSTRUCTION

SAFETY CLASS 1, SEE GEN NOTE 3 — EDT 612958

U.S. DEPARTMENT OF ENERGY
RICHLAND OPERATIONS OFFICE
ICF KAISER HANFORD COMPANY

STRUCTURAL
VENT STATION 6241-V
CONCRETE FLOOR PLAN & SECT

PROJECT W058, REPLACEMENT OF CROSS-SITE TRANSFER SYSTEM

SIZE	BLDG NO.	INDEX NO.	DWG NO.	REV NO.
F	6241-V	0900 0901	H-6-13987	3

SCALE SHOWN — JOB NO. CR1320 — SHEET 1 OF 1

PLOT SCALE: 1=48 — KEHCAD

KEH 0350.00 (03/94) STRTKEH#: 199403030900