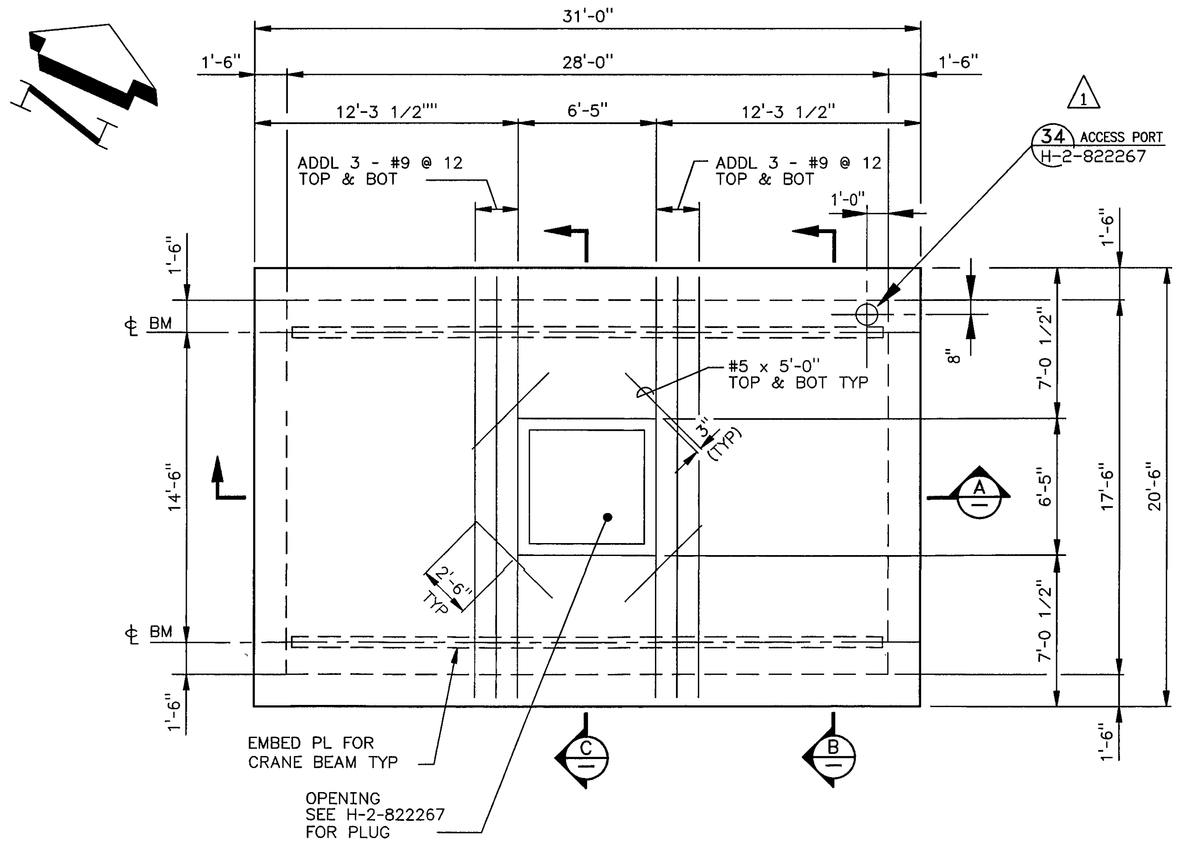

ROOF PLAN

SCALE: 1/4" = 1'-0

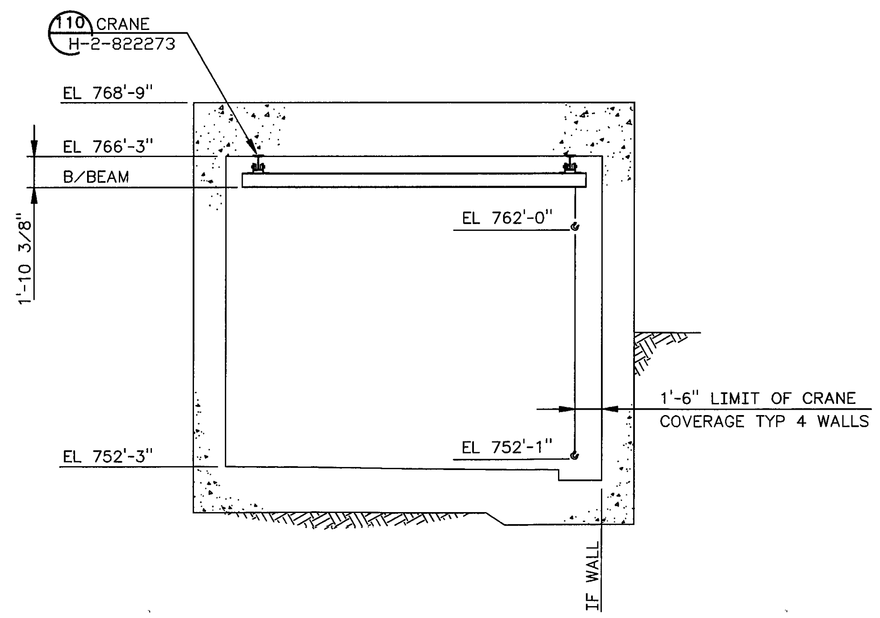

3 B CRANE COVERAGE
SCALE: 1/4" = 1'-0

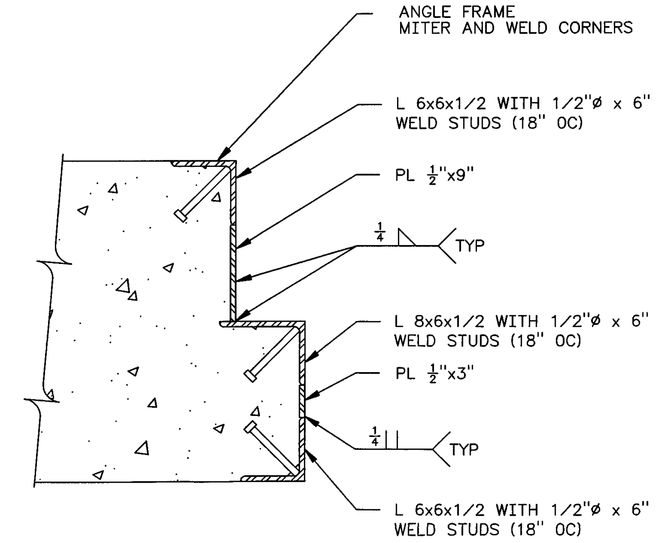

3 DETAIL
SCALE: 1 1/2" = 1'-0

SEE NOTE 2

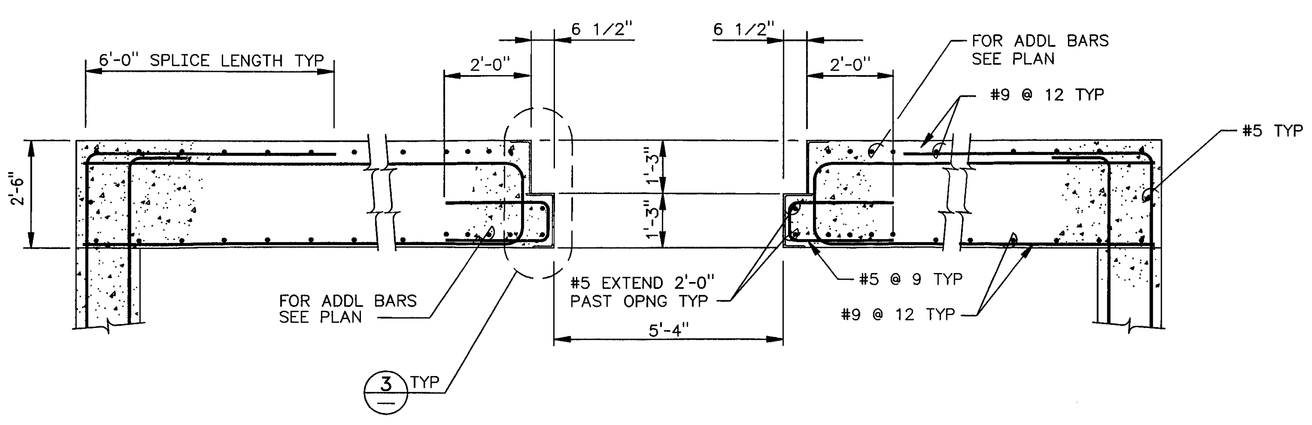

3 A SECTION
SCALE: 1/2" = 1'-0

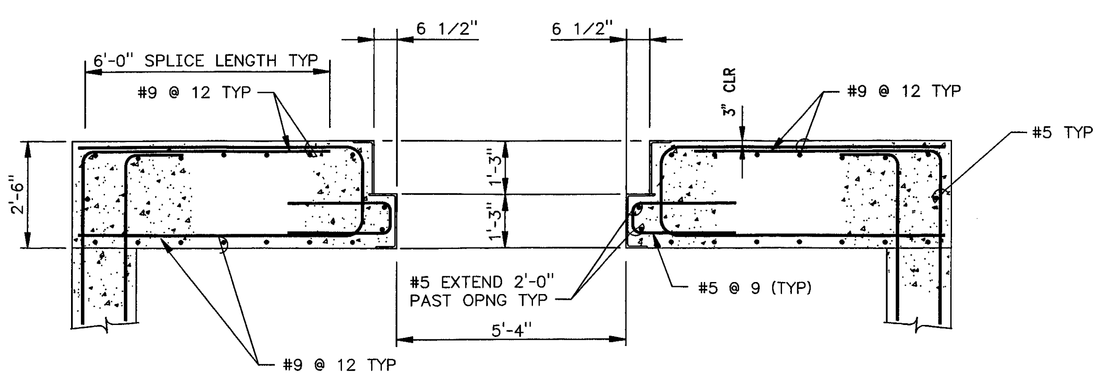

3 C SECTION
SCALE: 1/2" = 1'-0

NOTES

1. FOR STRUCTURAL GENERAL NOTES SEE H-2-822265
2. CONTRACTOR MAY USE LARGER ANGLES, CHANNELS, BENT PLATE OR COMBINATIONS OF THESE TO PROVIDE SAME CONFIGURATION FOR THE EMBEDDED FRAMES.

3

STATE OF WASHINGTON — JOHN S. LANGEVIN — 23814 — REGISTERED PROFESSIONAL ENGINEER — 11/13/97

EXPIRES: 7/1/99

S 3	-145, -162, -189 INCORP ECN W-058-106, -128, W-058 PROJECT TURNOVER AND		
M 2	REVISE PER ECN W-058-69	ASL 7/18/96	ASL 7/25/97
M 1	W-058-29 REVISE PER ECN W-058-20 &	DTC 2/15/96	ASL 2/23/96

MUMBER	TITLE
	DRAWING TRACEABILITY LIST

MUMBER	TITLE
H-2-822200	DRAWING LIST
NEXT USED ON	REFERENCES

CAD FILE F013988A CAD CODE 2J:IBM:ACD2:12.0:NN XREF'S N

		DATE
DESIGNED	B HOLLENBECK	8/14 1995
DSGN ENGR	DT CHOU	8/14 1995
CHECKED	ANN S LANGEVIN	8/14 1995
SAFETY	SEE DR/AT FORM	
ENVIR	SEE DR/AT FORM	
QUAL ENGR	SEE DR/AT FORM	
LEAD ENGR	ANN S LANGEVIN	8/14 1995
REVIEW NO.	8	8/7 1995

APVD FOR IMPL/ISC BY / FOR / DATE

APPROVED FOR IMPLEMENTATION BY CARL VAN KATWIJK FOR WHC DATE 10/13/1995

SAFETY CLASS 1, SEE GEN NOTE 3 | EDT 612958 | USE CONSTRUCTION

U.S. DEPARTMENT OF ENERGY
RICHLAND OPERATIONS OFFICE
ICF KAISER HANFORD COMPANY

STRUCTURAL
VENT STATION 6241-V
ROOF PLAN & SECTIONS

PROJECT W058, REPLACEMENT OF CROSS-SITE TRANSFER SYSTEM

SIZE	BLDG NO.	INDEX NO.	DWG NO.	REV NO.
F	6241-V	0900 0901	H-6-13988	3

SCALE SHOWN | JOB NO. CR1320 | SHEET 1 OF 1

PLOT SCALE: 1=48 | KEHCAD | KEH 0350.00 (03/94) STRTKEHF: 1994D0320900