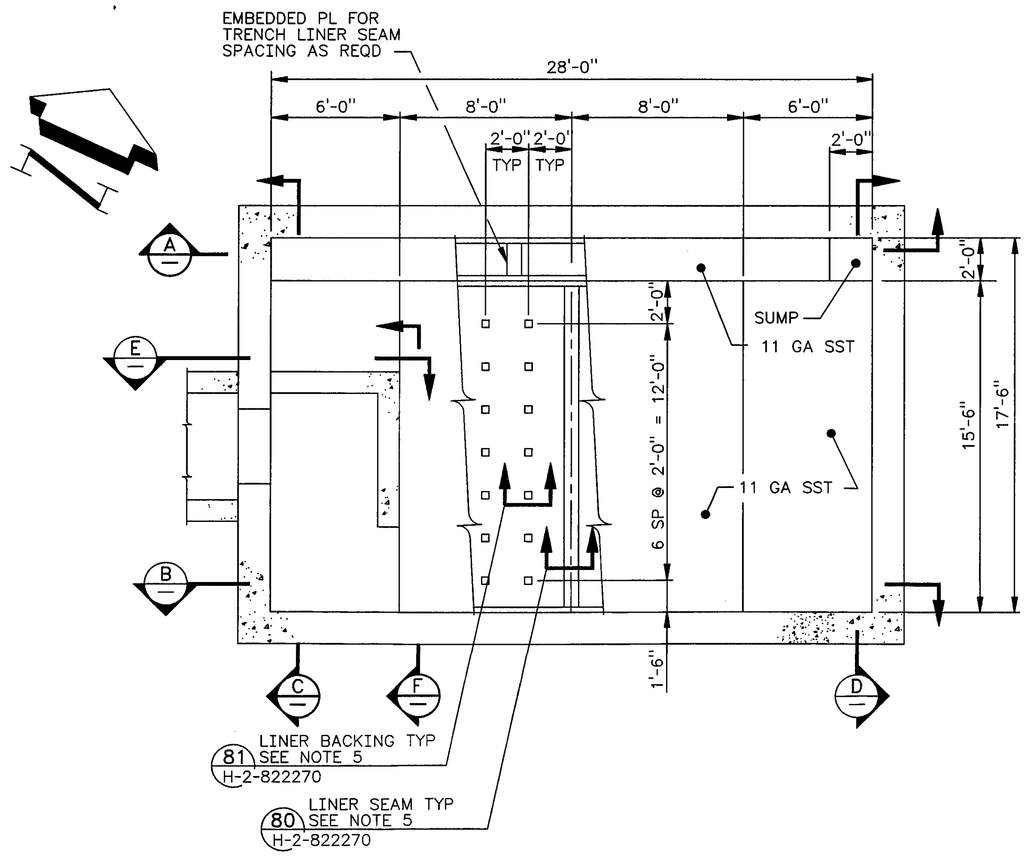

3 PLAN
SCALE: 1/4" = 1'-0

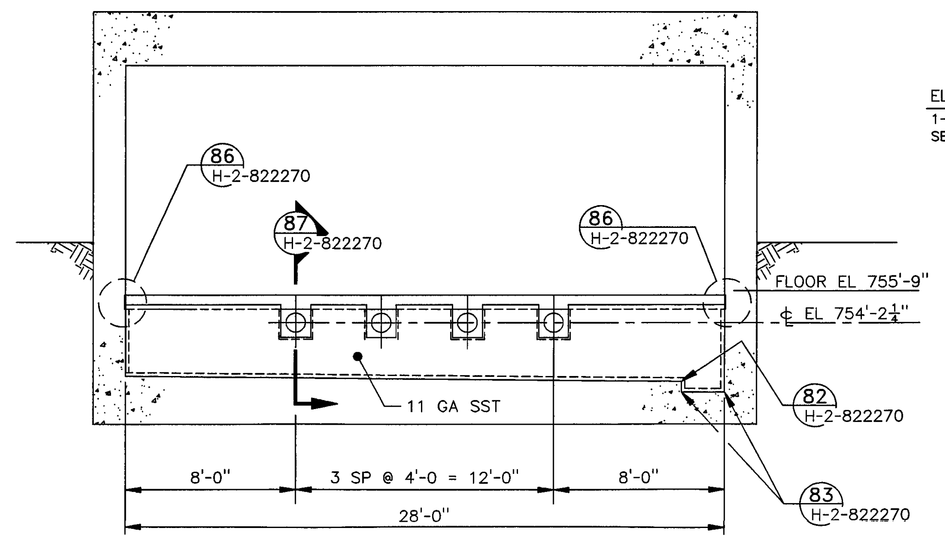

A SECTION
SCALE: 1/4"= 1'-0"

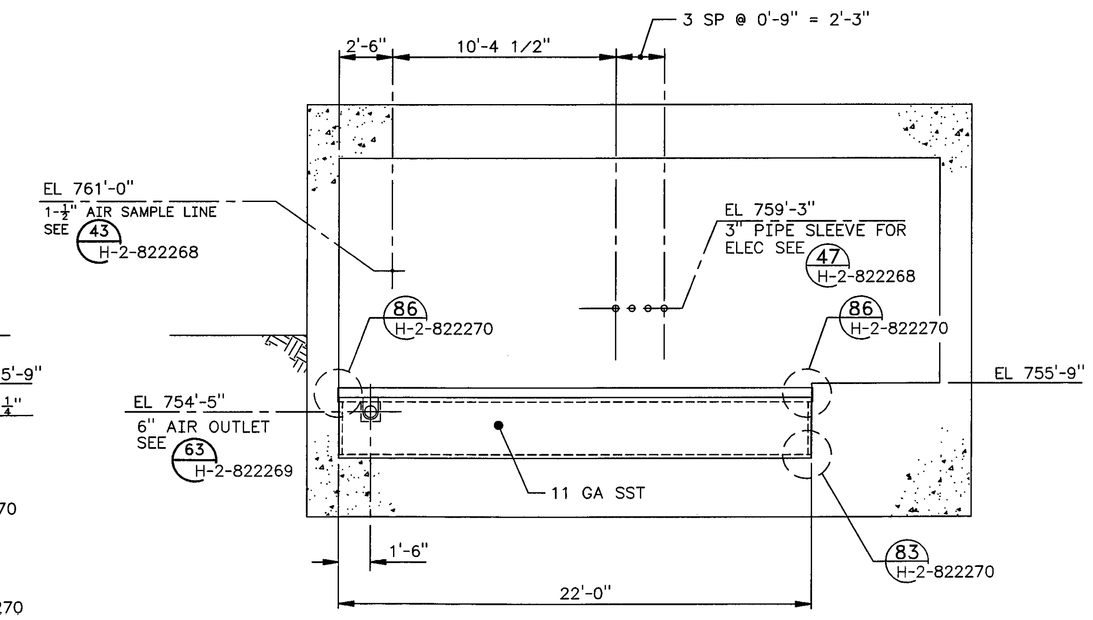

3 B SECTION
SCALE: 1/4"= 1'-0"

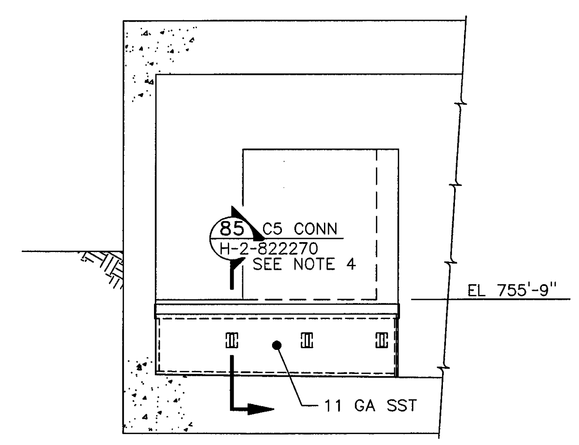

2 F SECTION
SCALE: 1/4"= 1'-0"

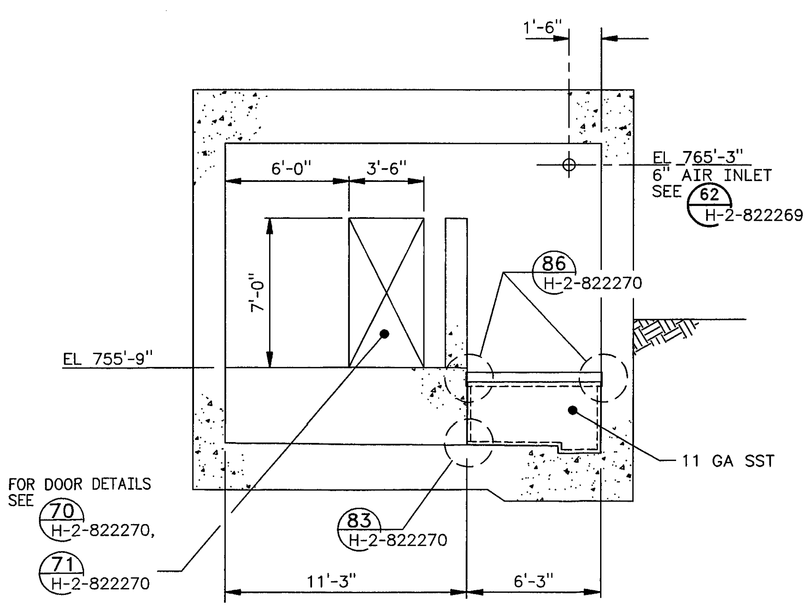

C SECTION
SCALE: 1/4"= 1'-0"

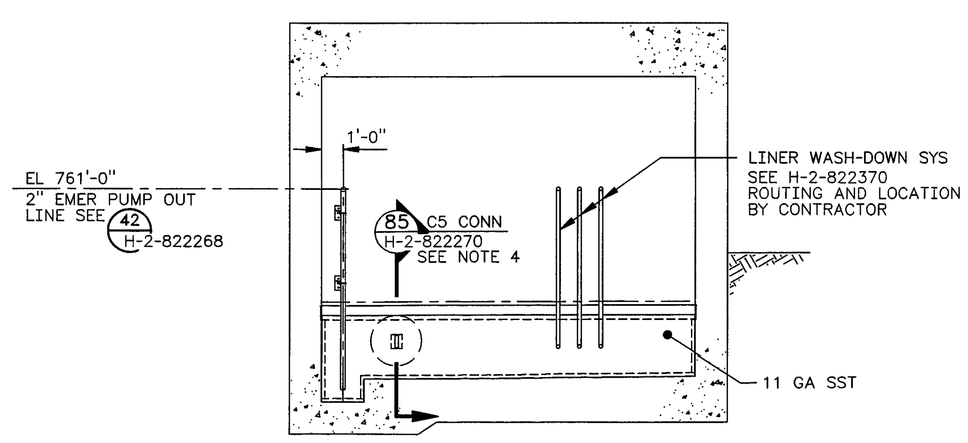

D SECTION
SALE: 1/4"= 1'-0"

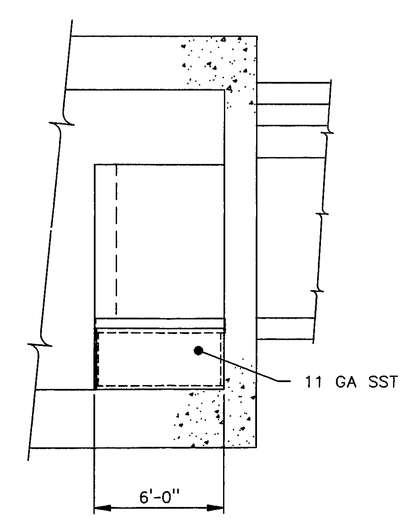

E SECTION
SCALE: 1/4"= 1'-0"

NOTES

1. FOR STRUCTURAL GENERAL NOTES SEE H-2-822265
2. SHIELD FLOOR NOT SHOWN THIS DRAWING FOR CLARITY
3. FOR ELEVATION CALL-OUTS SEE H-6-13987
4. FOR C5 CONNECTION LOCATIONS SEE PIPE SUPPORT FRAMING PLAN ON H-6-13991
5. (3) LOCATION OF LINER SEAM AND LINER BACKING PLATES MAY VARY AS REQUIRED FOR LINER FABRICATION. THE SPACINGS SHOWN ARE A MAXIMUM, AND EITHER A LINER SEAM OR BACKING PLATE MUST ALIGN WITH THE COLUMNS SHOWN ON DRAWING H-6-13991.

STATE OF WASHINGTON — ANN S. LANGEVIN — 23814 — REGISTERED PROFESSIONAL ENGINEER — 11/14/97

EXPIRES: 7/1/99

REV NO.	DESCRIPTION	REVISIONS	KEH APPROVALS
S			
3	INCORP ECN W-058-74, -145 W-058 PROJECT TURNOVER AND	P LADNE 11/05/97	11/14/97
M 2	REVISE PER ECN W-058-69	ASL P LADNE 7/15/96	ASL 7/25/97 ASL 7/25/97 ASL 7/25/97 DWL 7/25/97
M 1	REVISE PER ECN W-058-29	DTC P LADNE 2/15/96	ASL 2/23/96 ASL 2/23/96 DWK 3/13/96

NUMBER	TITLE (DRAWING TRACEABILITY LIST)	NUMBER	TITLE (REFERENCES)
		H-2-822200	DRAWING LIST
		NEXT USED ON	

CAD FILE F013990A — CAD CODE 2J:IBM:ACD2:12.0:NN — XREF'S N

DESIGNED	B HOLLENBECK	DATE	
DSGN ENGR	DT CHOU		8/15 1995
CHECKED	ANN S LANGEVIN		10/15 1995
SAFETY	SEE DR/AT FORM		
ENVIR	SEE DR/AT FORM		
QUAL ENGR	SEE DR/AT FORM		
LEAD ENGR	ANN S LANGEVIN		8/15 1995
REVIEW NO.	8		8/7 1995
APVD FOR IMPL/INC FOR DATE			
APPROVED FOR IMPLEMENTATION BY	CARL VAN KATWIJK		
FOR	WHC	DATE	10/20/95

USE CONSTRUCTION
SAFETY CLASS 1, SEE GEN NOTE 3 — EDT 612958

U.S. DEPARTMENT OF ENERGY
RICHLAND OPERATIONS OFFICE
M ICF KAISER HANFORD COMPANY

STRUCTURAL
VENT STATION 6241-V
WALL ELEVATIONS & SECTIONS

PROJECT W058, REPLACEMENT OF CROSS-SITE TRANSFER SYSTEM

SIZE	BLDG NO.	INDEX NO.	DWG NO.	REV NO.
F	6241-V	0901 0100	H-6-13990	3

SCALE SHOWN — JOB NO. CR1320 — SHEET 1 OF 1

PLOT SCALE: 1=48 — KEHCAD

KEH 0350.00 (03/94)
STRTKEHF: 19940303.0900