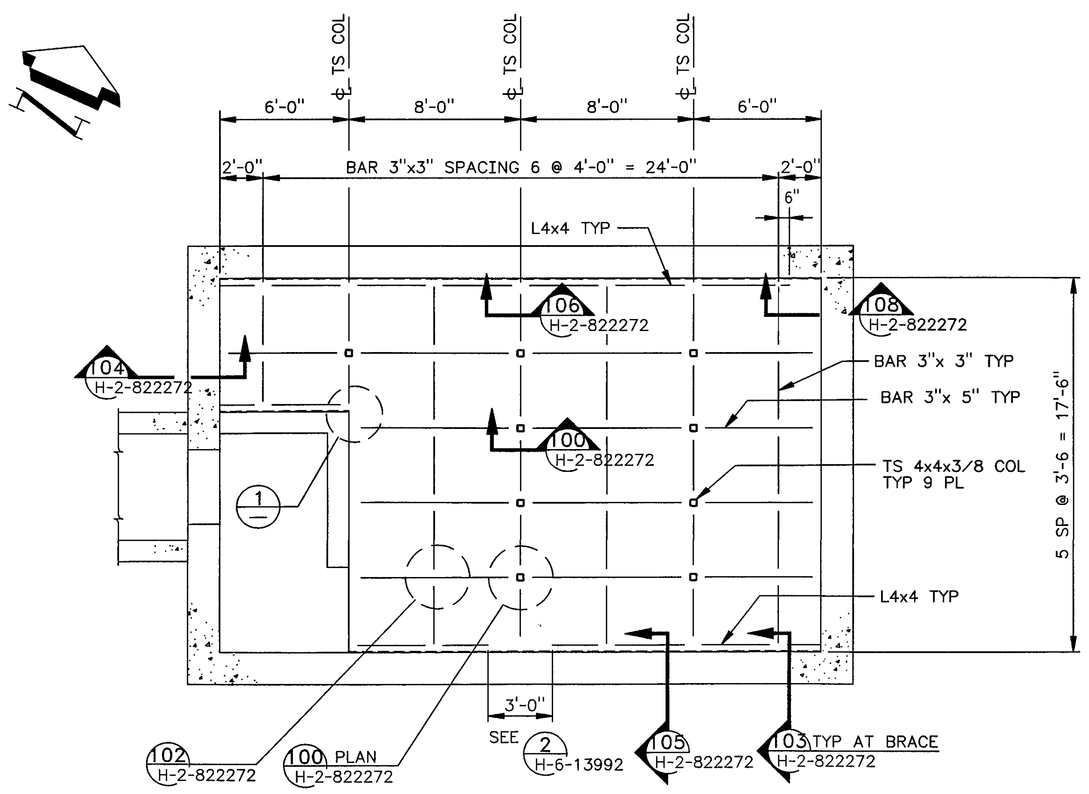

SHIELD FLOOR SUPPORT PLAN AT EL 755'-6" TOS
SCALE: 1/4" = 1'-0

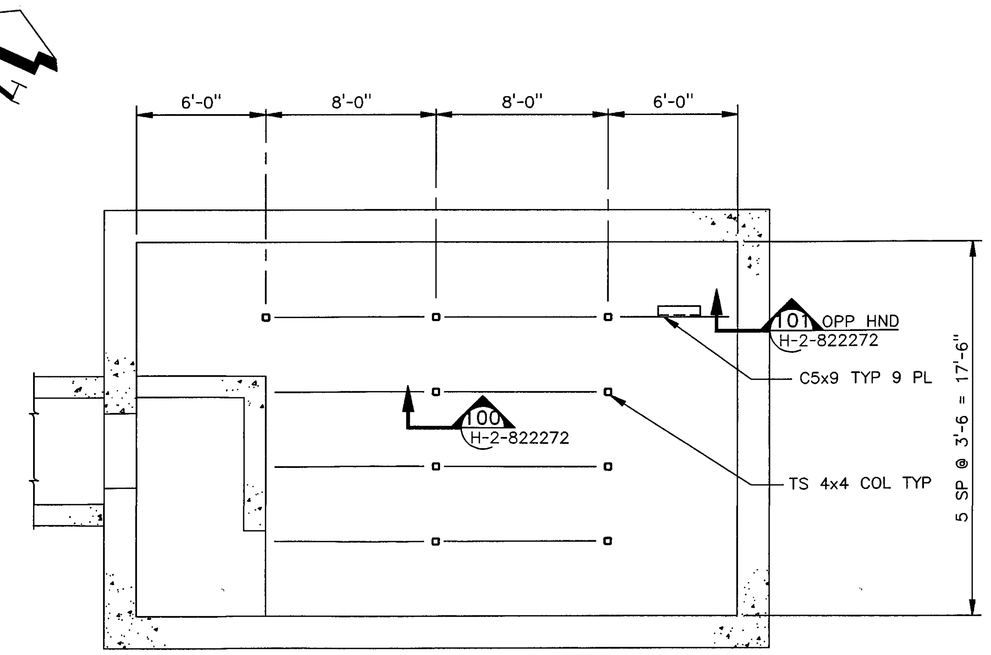

PIPE SUPPORT FRAMING PLAN AT EL 754'-0 3/4" TOS
SCALE: 1/4" = 1'-0

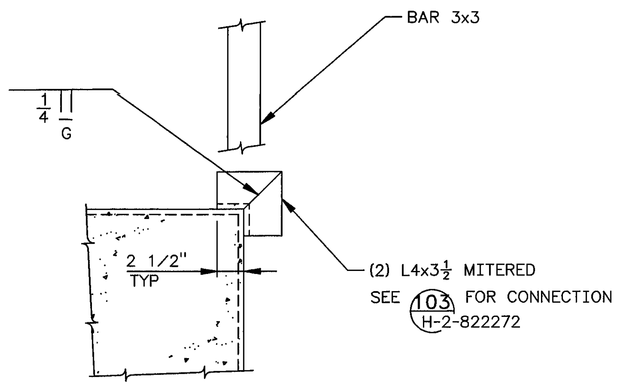

1 BAR 3x3 AT CORNER
SCALE: 1 1/2"= 1'-0"

NOTES

1. FOR STRUCTURAL GENERAL NOTES SEE H-2-822265

EXPIRES: 7/1/1997

DESIGNED	B HOLLENBECK	DATE	
DSGN ENGR	DT CHOU	9/29 1995	
CHECKED	ANN S LANGEVIN	9/29 1995	
SAFETY	SEE DR/AT FORM		
ENVIR	SEE DR/AT FORM		
QUAL ENGR	SEE DR/AT FORM		
LEAD ENGR	ANN S LANGEVIN	9/29 1995	
REVIEW NO.	7	9/19 1995	
APPROVED FOR IMPLEMENTATION BY	CARL VAN KATWIJK		
FOR	WHC	DATE	10/13/95

SAFETY CLASS 3 — USE CONSTRUCTION — EDT 612958

U.S. DEPARTMENT OF ENERGY
RICHLAND OPERATIONS OFFICE
M ICF KAISER HANFORD COMPANY

STRUCTURAL
VENT STATION 6241-V
SUPPORT FRAMING PLANS

PROJECT W058, REPLACEMENT OF CROSS-SITE TRANSFER SYSTEM

SIZE	BLDG NO.	INDEX NO.	DWG NO.	REV NO.
F	6241-V	1000	H-6-13991	2

SCALE SHOWN — JOB NO. CR1320 — SHEET 1 OF 1

REV NO.	DESCRIPTION	REV BY DATE	KEH APPROVALS	APVD FOR IMPL/INC FOR DATE
2	INCORP ECN W-058-91 W-058 PROJECT TURNOVER AND	P LAING 11/15/97	11/15/97	11/20/97
1	REVISE PER ECN W-058-69	P LAING 7/18/96	3/3/96	3/3/96

REVISIONS

CAD FILE F013991A — CAD CODE 2J:IBM:ACD2:12.0:NN — XREFS N

NUMBER	TITLE
H-2-822200	DRAWING LIST

DRAWING TRACEABILITY LIST — REFERENCES — NEXT USED ON

PLOT SCALE: 1=48 — KEHCAD — KEH 0350.00 (03/94) STRTKEHF: 199403030900