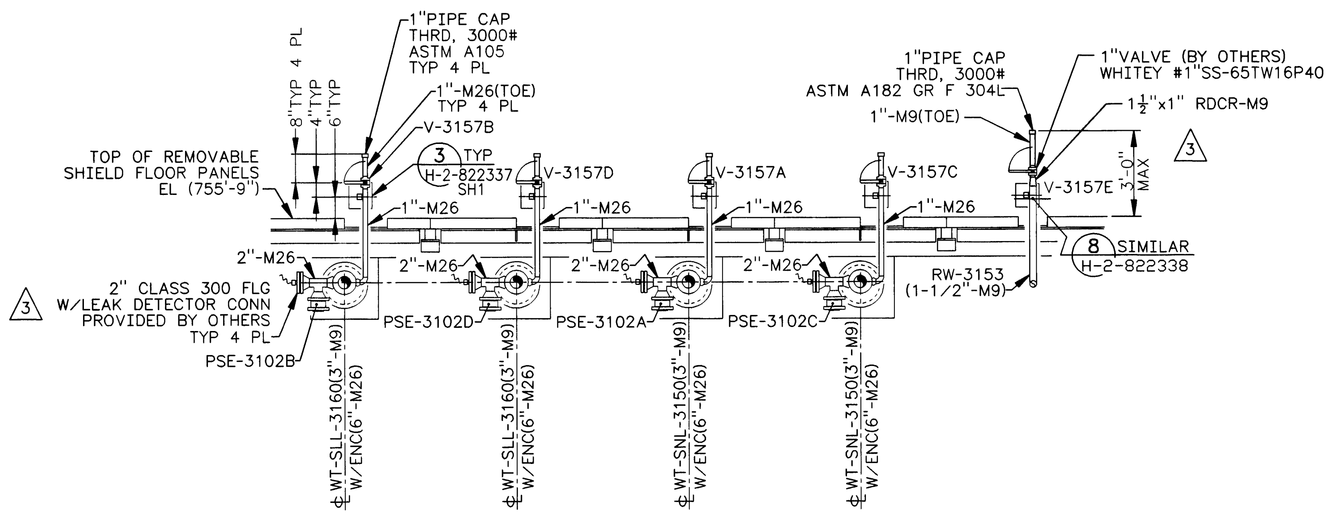

A SECTION
H-6-13994 SH1&2 SCALE: 1/2"=1'-0"

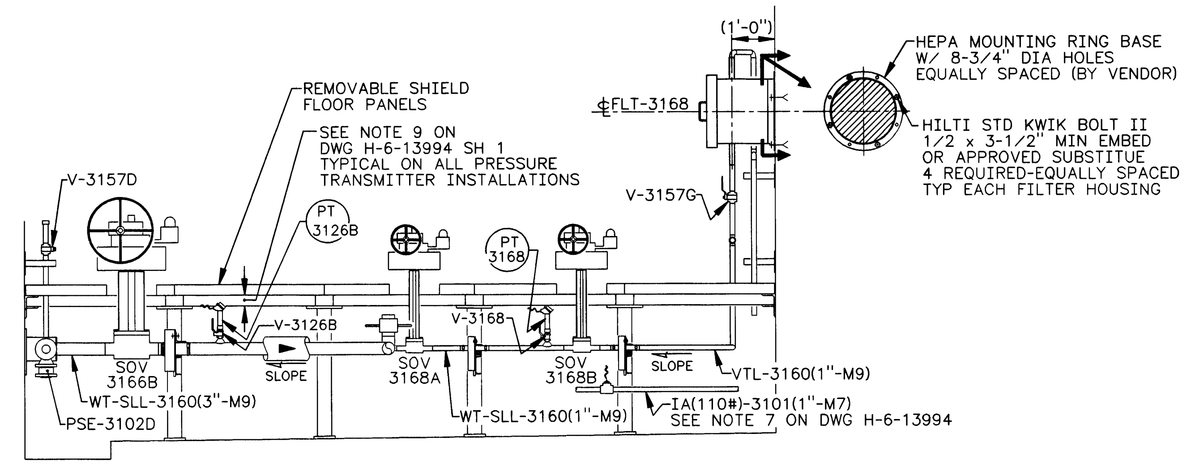

B SECTION
H-6-13994 SH1&2 SCALE: 1/2"=1'-0"

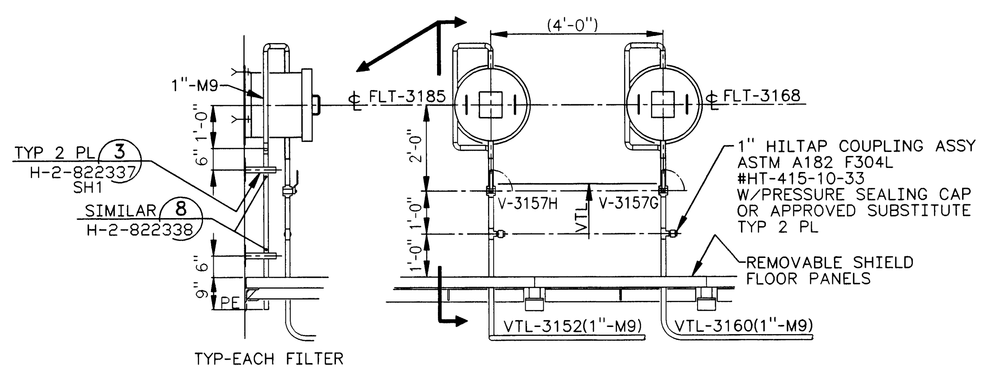

C SECTION
H-6-13994 SH1&2 SCALE: 1/2"=1'-0"

NOTES :

1. FOR GENERAL NOTES SEE DWG H-2-822335.

JAMES R. COLLINS
STATE OF WASHINGTON
1691
REGISTERED
PROFESSIONAL ENGINEER
12/2/97
EXPIRES: 11/11/99

S	3	W-058-126 W-058-279, W-058-296, W-058-144; W-058-278, REVISED PER ECN W-058 PROJECT TURNOVER	HBM 11/5/97		12/2/97		12/3/97
	2	ECN W-058-094 ELEVATION CHANGE PER	RJL 8/19/96	WLZ 8/21/96		JRC 8/22/96	CVK 8/22/96
	1	ECN W-058-036 GENERAL REVISION, PER	RJL 1/26/96	CAK 2/28/96		JRC 3/7/95	CVK 3/13/96
MF	REV NO.	DESCRIPTION	REV BY DATE	KEH APPROVALS			APVD FOR IMPL/INC FOR DATE

REVISIONS

NUMBER	TITLE	REFERENCES
		W-058-C3 W-058 CONSTRUCTION SPECIFICATION
		H-2-822200 DRAWING LIST

DRAWING TRACEABILITY LIST

NEXT USED ON H-6-13994

CAD FILE F013995A CAD CODE 2J:IBM:ACD2:12.0:NN XREFS N

DESIGNED RJ LAMOUREUX DATE
DSGN ENGR KELLY K. HAYASE 9/25/1996
CHECKED L HALL 9/25/1996
SAFETY SEE DR/AT FORM
ENVIR SEE DR/AT FORM
QUAL ENGR SEE DR/AT FORM
LEAD ENGR J R COLLINS 9/26/1996
REVIEW NO. 10 9/22/1995
APPROVED FOR IMPLEMENTATION
BY C VAN KATWIJK
FOR WHC DATE 10/13/95

SAFETY CLASS 3
USE CONSTRUCTION
EDT 612958

U.S. DEPARTMENT OF ENERGY
RICHLAND OPERATIONS OFFICE
ICF KAISER HANFORD COMPANY

PIPING
SECTIONS
VENT STATION 6241-V

PROJECT W-058, REPLACEMENT OF CROSS-SITE TRANSFER SYSTEM

SIZE	BLDG. NO.	INDEX NO.	DWG NO.	REV NO.
F	6241-V	8404	H-6-13995	3

SCALE SHOWN JOB NO. CR1320 SHEET 1 OF 1

PLOT SCALE: 1=24 KEHCAD

KEH 0350.00 (03/94)
STRYKER(P) 1994030300600