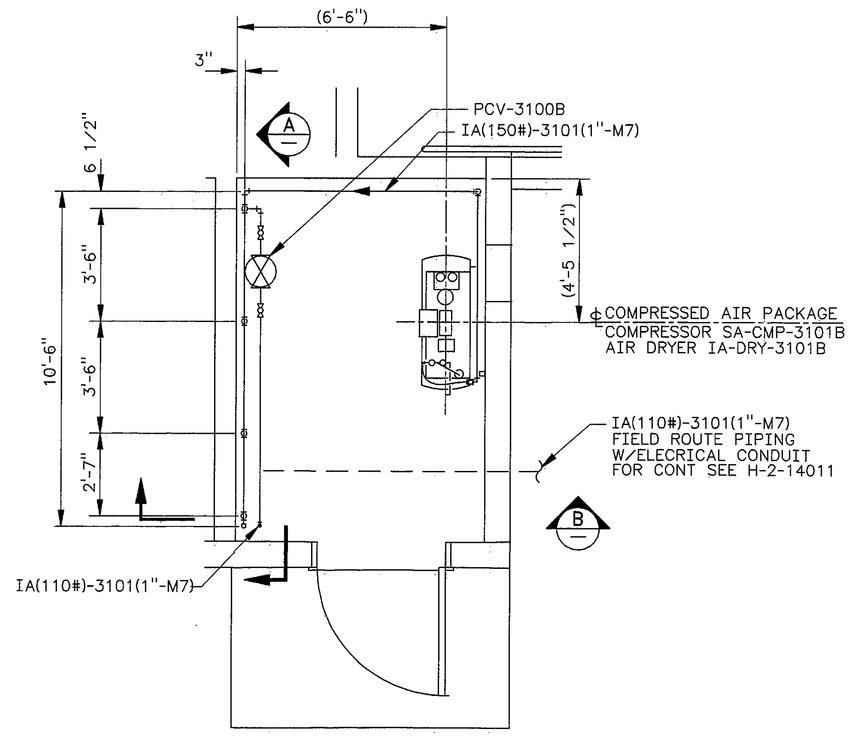

3 PLAN
SCALE: 3/8"=1'-0"

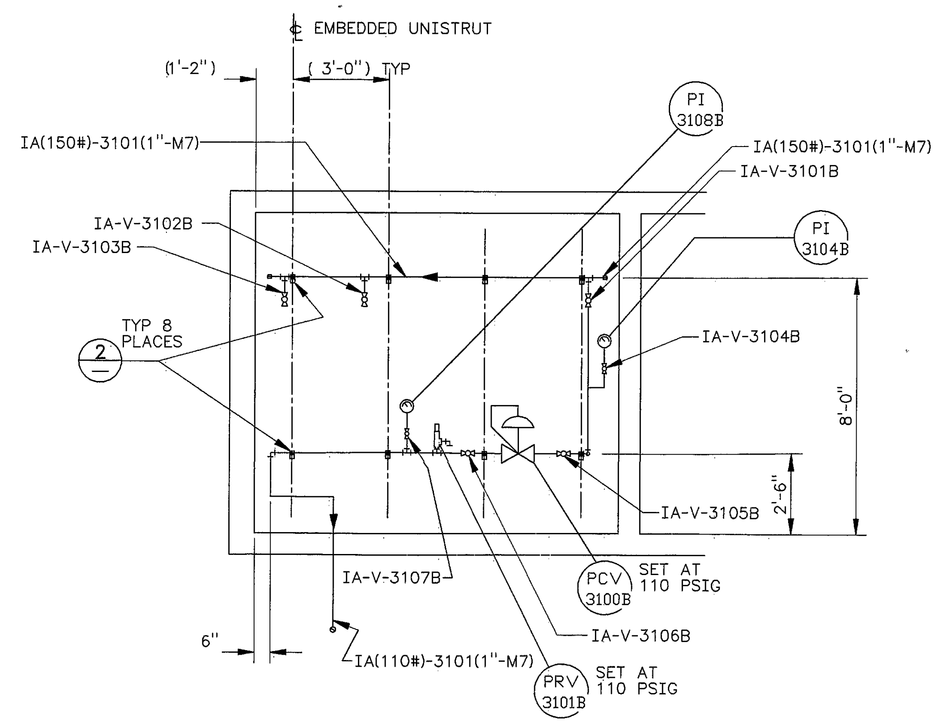

3 A SECTION
SCALE: 3/8"=1'-0"

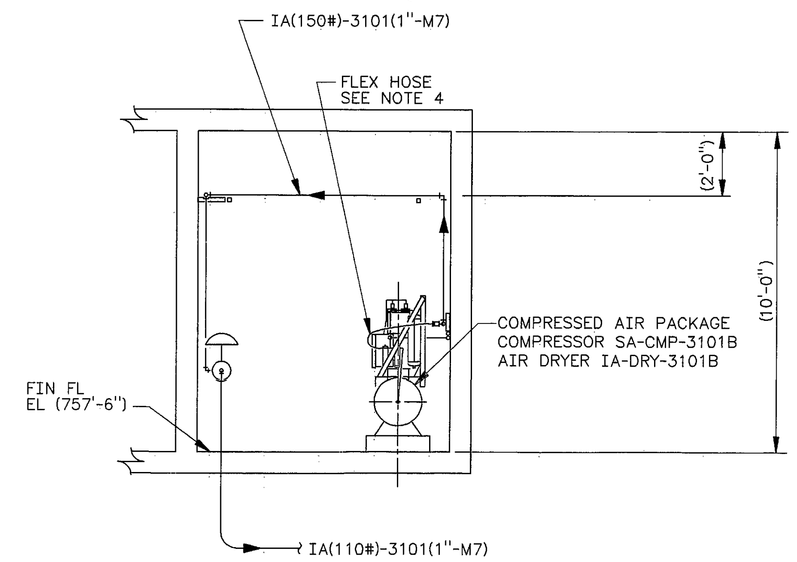

3 B SECTION
SCALE: 3/8"=1'-0"

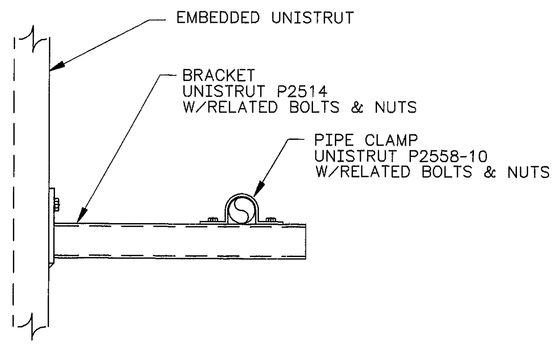

2 DETAIL
SCALE: 3"=1'-0"

NOTES:

1. FOR GENERAL NOTES SEE DWG H-2-822335.
2. MOUNT AND SECURE COMPRESSED AIR PACKAGE PER MANUFACTURERS INSTRUCTIONS.
3. ~~CONTRACTOR SHALL NOT CUT THROUGH ANY PRESTRESSING REINFORCEMENT IN PRECAST CONCRETE PLANKS WITHOUT THE PERMISSION OF THE ARCHITECT AND PRECAST CONCRETE CONTRACTOR. ALL FIELD HOLES IN PRECAST SHALL BE NEATLY CUT OR DRILLED - NOT CHIPPED.~~
4. INTERFACE BETWEEN IA(150#)-3101(1"-M7) AND COMPRESSOR SHALL BE A 1/2" (NPT) FLEXIBLE AIR HOSE. HOSE TUBE AND COVER SHALL BE ETHLENE PROPYLENE RUBBER, NEOPRENE, AND/OR NITRILE WITH HIGH STRENGTH YARN BRAID (MIN). MAXIMUM WORKING PRESSURE (PSI) 200, TEMPERATURE RANGE -20°F TO 200° F. CONSTRUCTION ENGINEER TO DETERMINE FITTINGS REQUIRED FOR ATTACHMENT.

JAMES R. COLLINS
STATE OF WASHINGTON
16941
REGISTERED
PROFESSIONAL ENGINEER
5/31/98

EXPIRES: 11/11/99

H-2-822200	DRAWING LIST						
NUMBER	TITLE	NUMBER	TITLE				
DRAWING TRACEABILITY LIST		NEXT USED ON	REFERENCES				

REV NO.	DESCRIPTION	REV BY DATE	KEH APPROVALS	APVD FOR IMPL/ISC FOR DATE
3	REV PER ECN W-058-375 W-058 PROJECT TURNOVER	FBM 3/12/98	3/31/98 3/31/98	4/15/98

REVISIONS

CAD FILE F013997A CAD CODE 2J:IBM:ACD2:12.0:NN XREFS N

DESIGNED	CA KEELER	DATE
DSGN ENGR	WILLY K. HAYASE	9/29/95
CHECKED	D.O. DOUGHERTY	9/29/95
SAFETY	SEE DR/AT FORM	
ENVIR	SEE DR/AT FORM	
QUAL ENGR	SEE DR/AT FORM	
LEAD ENGR	J.R. COLLINS	10/2/95
REVIEW NO.	6	9/29/95
APPROVED FOR IMPLEMENTATION BY	C. VAN KATWIJK	
FOR	WHC	DATE 10-13-95

USE	CONSTRUCTION
SAFETY CLASS	3
EDT	612958

U.S. DEPARTMENT OF ENERGY
RICHLAND OPERATIONS OFFICE
ICF KAISER HANFORD COMPANY

PIPING
VENT STATION 6241-V
INSTRUMENT AIR PLAN

PROJECT W-058, REPLACEMENT OF CROSS-SITE TRANSFER SYSTEM

SIZE	BLDG NO.	INDEX NO.	DWG NO.	REV NO.
F	6241-V	8510	H-6-13997	3

SCALE SHOWN JOB NO. CR1320 SHEET 1 OF 1

PLOT SCALE: 1=32 KEHCAD 1

KEH: 0350.00 (03/94)
STRTKEHP: 19940303.0900