QTY	PART NO.	DESCRIPTION	REFERENCE
1	1	WATTHOUR DEMAND METER, SOCKET TYPE, 7 TERMINAL, 240 VOLT TYPE FOR USE ON 480Y/277V, CLASS 200 FOR MAX 200 AMP SERVICE, COMPLETE WITH A M-90 REGISTER AND A PULSE INITIATOR OUTPUT BOARD	GE TYPE VM-65-S
1	2	METER SOCKET AND ENCLOSURE, 7 TERMINAL WITH MANUAL OR AUTOMATIC CIRCUIT CLOSING DEVICES, 600 VOLT RATED NEMA TYPE 3R CONSTRUCTION	CIRCLE AW NO. U-267** (100-200A)
1	3	GROUNDING LUG (BOLT TO ENCLOSURE)	GE CAT. NO. TGL1 EQUIPMENT GND KIT **

**MAY BE THE EQUIVALENT PRODUCT

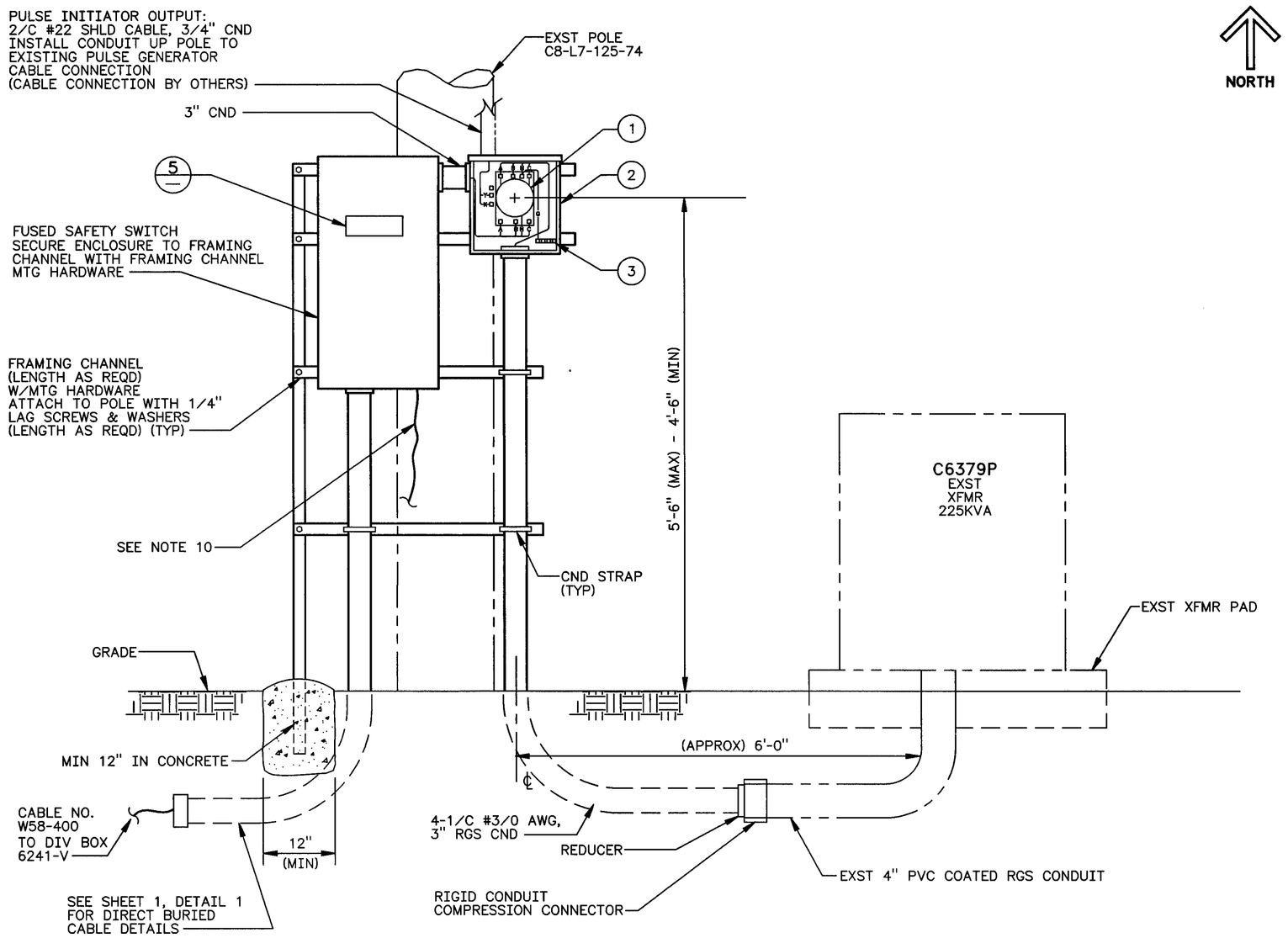

1a A SH 1 ELEVATION (LOOKING WEST)
SCALE: NONE

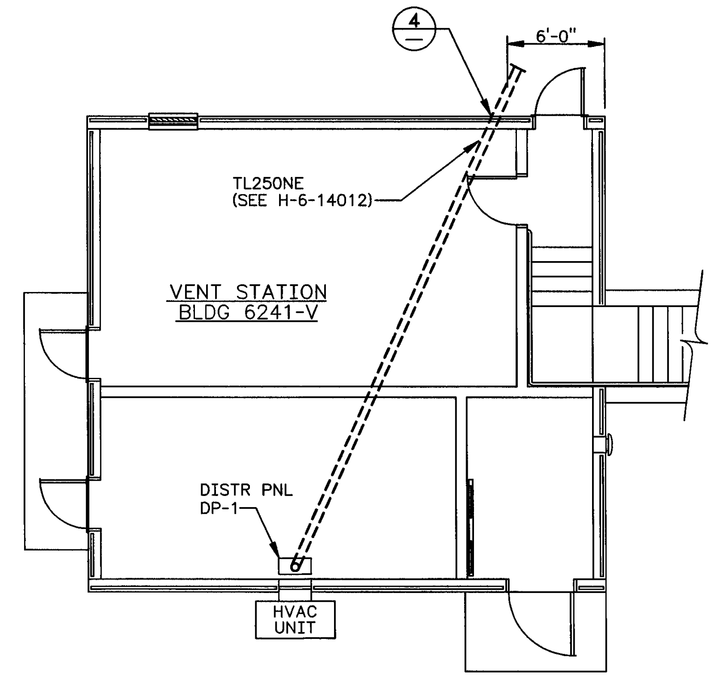

2 SH 1 ENLARGED PLAN
SCALE: 3/16" = 1'-0"

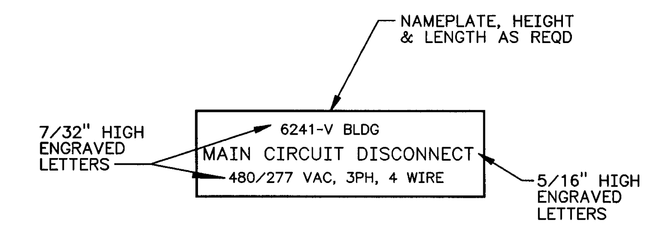

5 NAMEPLATE DETAIL
SCALE: NONE

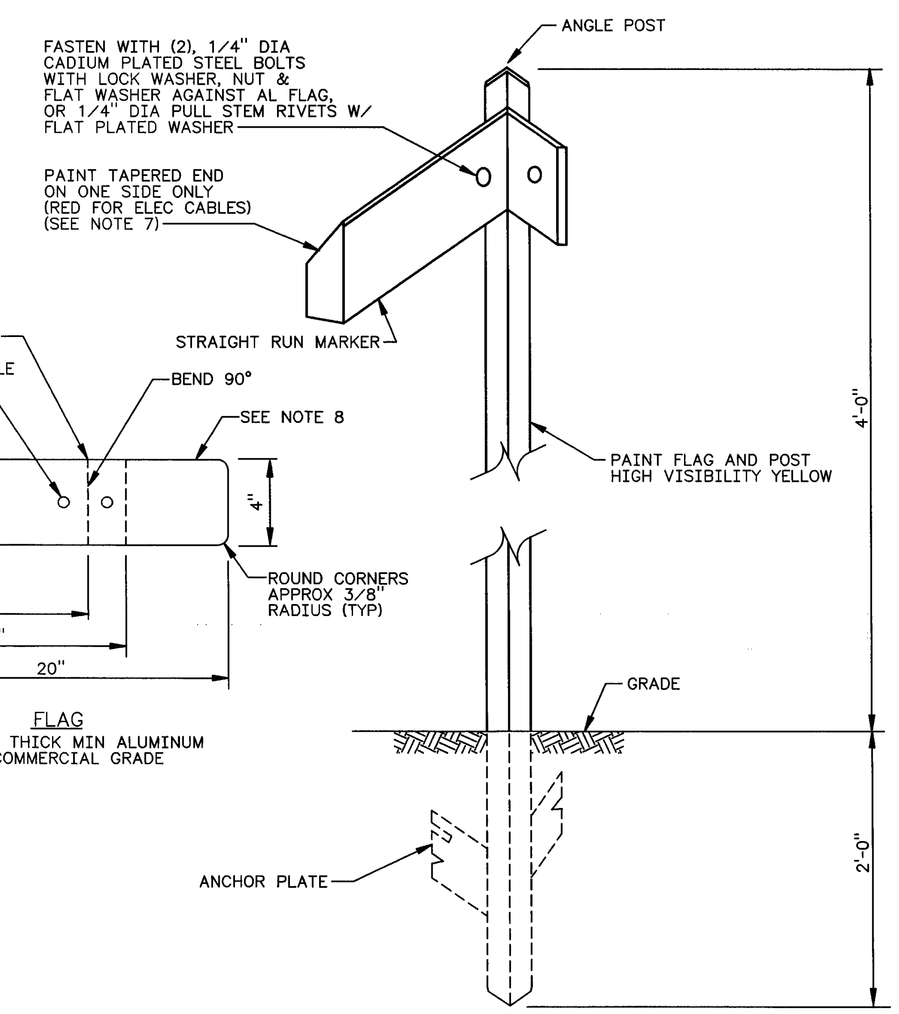

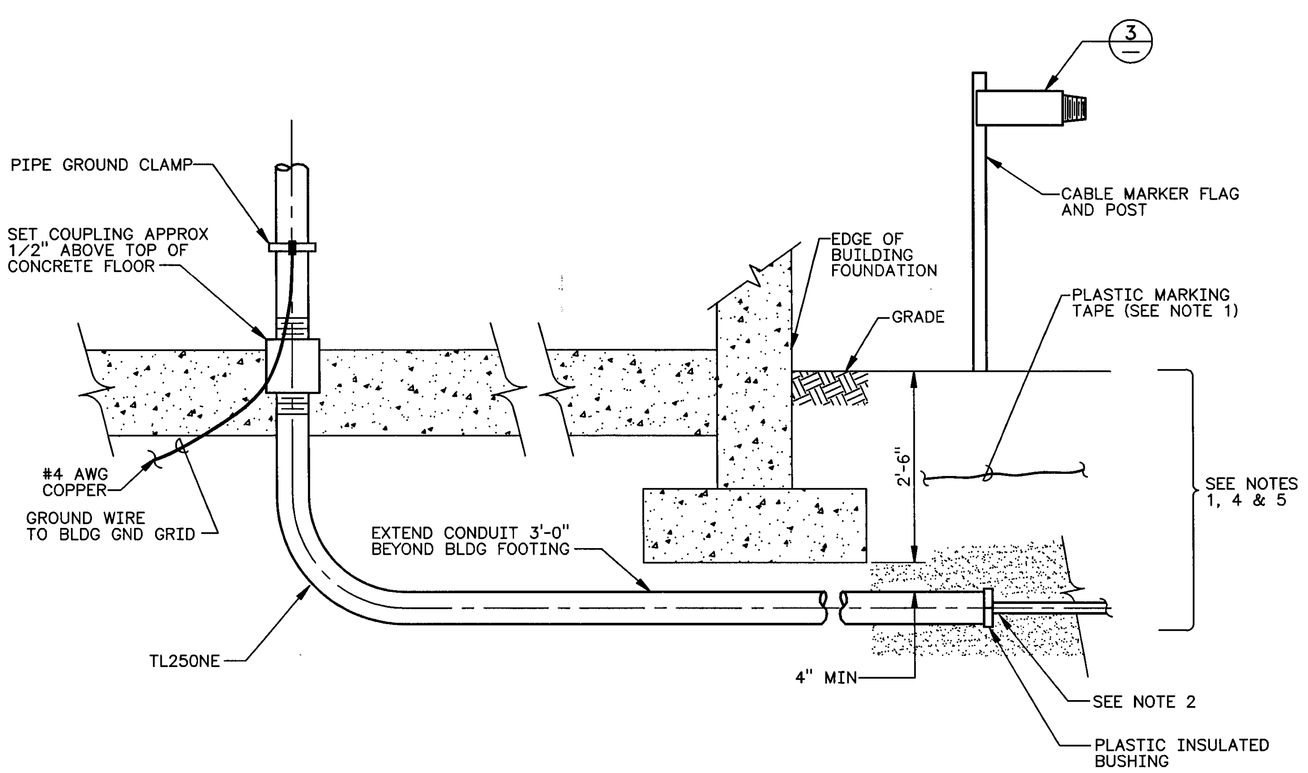

3 SH 1 MARKER FLAG & POST DETAIL
SCALE: NONE
SEE NOTE 6 & 7

4 DIRECT BURIED CABLE DETAIL (LOOKING WEST)
SCALE: NONE

NOTE:
SEE SHEET 1 FOR GENERAL NOTES.

GREGORY P. McDONALD, STATE OF WASHINGTON, 30071, REGISTERED PROFESSIONAL ENGINEER
EXPIRES 05/30/99

NUMBER	TITLE	NUMBER	TITLE
DRAWING TRACEABILITY LIST		NEXT USED ON	REFERENCES

REV NO.	DESCRIPTION	REV BY DATE	KEH APPROVALS	APV'D FOR INPL/ENG FOR DATE
1	a) INC ECN W-058-193 PER b) ECN W-058-361 & W-058 PROJECT TURNOVER	CLC 8-13 1997	mls	11/21/97

REVISIONS

CAD FILE F014010B CAD CODE 2J:IBM:ACD2:12.0:NN XREF'S N

DESIGNED	CL CLOUD	DATE	
DSGN ENGR	BRAD GRAF	9-28 1995	
CHECKED	AR SNOWHITE	9-28 1995	
SAFETY	SEE DR/AT FORM		
ENVIR	SEE DR/AT FORM		
QUAL ENGR	SEE DR/AT FORM		
LEAD ENGR	ML ALEXANDER	9-24 1995	
REVIEW NO.	13	9-7 1995	

APPROVED FOR IMPLEMENTATION BY C VAN KATWIJK FOR WHC DATE 10-13-95

SAFETY CLASS 3 USE CONSTRUCTION EDT 612958

M U.S. DEPARTMENT OF ENERGY
RICHLAND OPERATIONS OFFICE
ICF KAISER HANFORD COMPANY

ELECTRICAL
SITE PLAN & DETAILS
VENTILATION STATION

PROJECT W058 REPLACEMENT OF CROSS SITE TRANSFER SYSTEM

SIZE	BLDG NO.	INDEX NO.	DWG NO.	REV NO.
F	6241-V	7301 8001	H-6-14010	1

SCALE SHOWN JOB NO. CR1320 SHEET 2 OF 2

2 PLOT SCALE: 1=1 KEHCAD 1b 1

KEH 0350.00 (03/94)
STRTKEH#: 19940303.0900