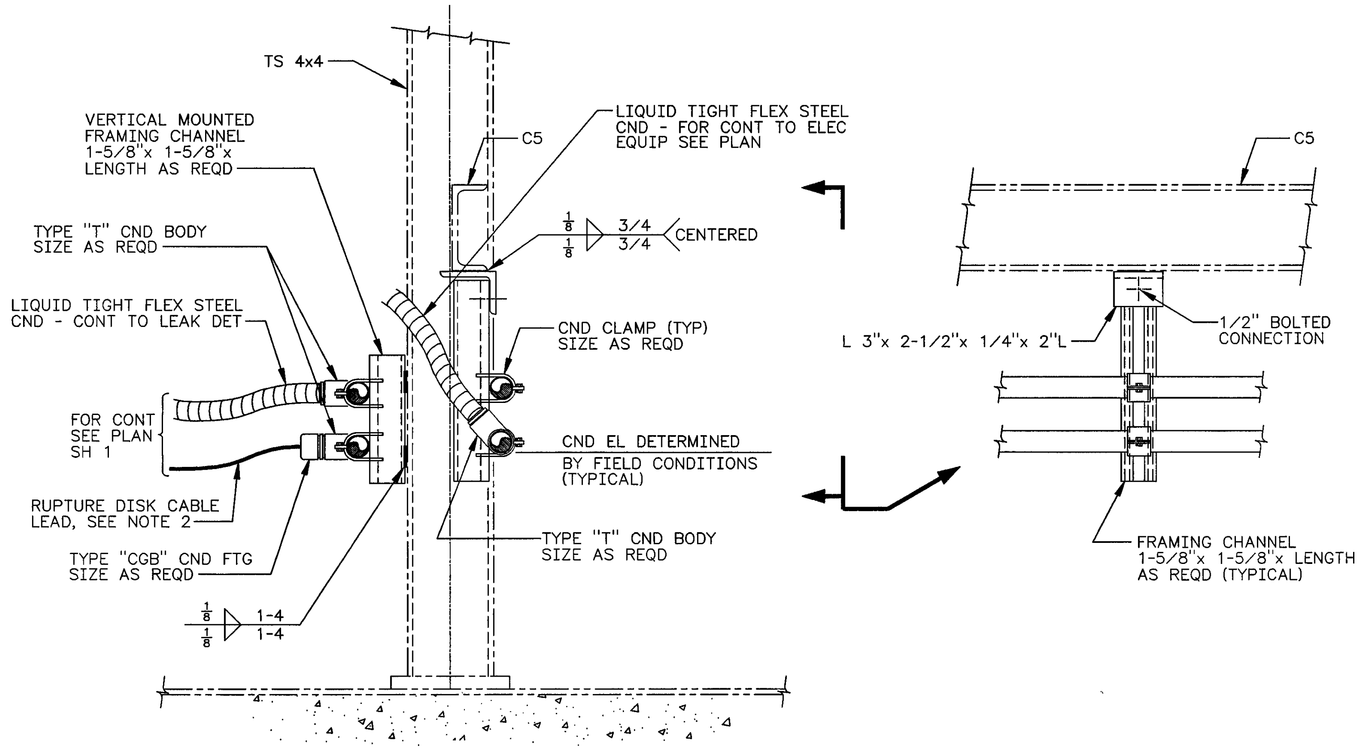

1 SH 1 DETAIL SCALE: NONE

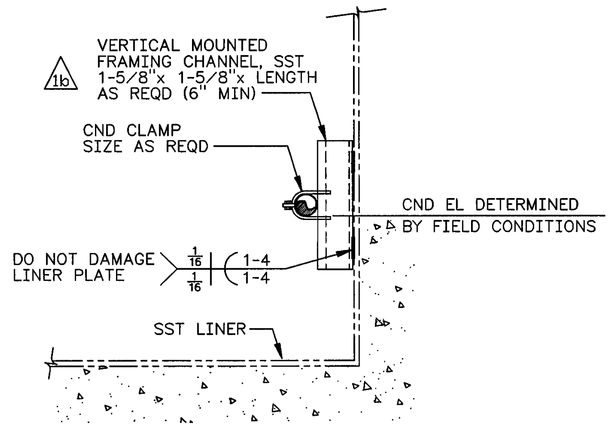

2 SH 1 DETAIL SCALE: NONE

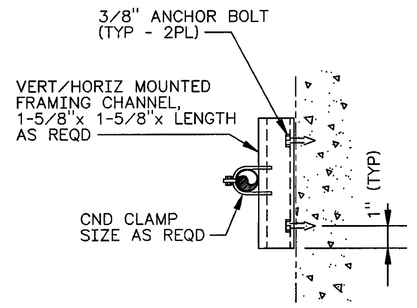

3 SH 1 DETAIL SCALE: NONE

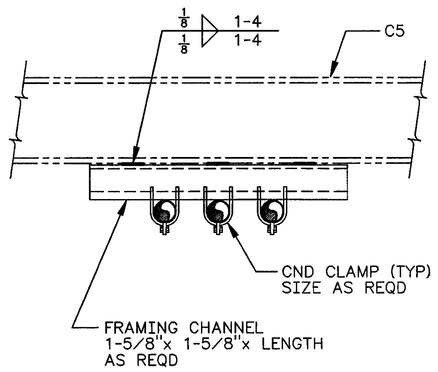

4 SH 1 DETAIL SCALE: NONE

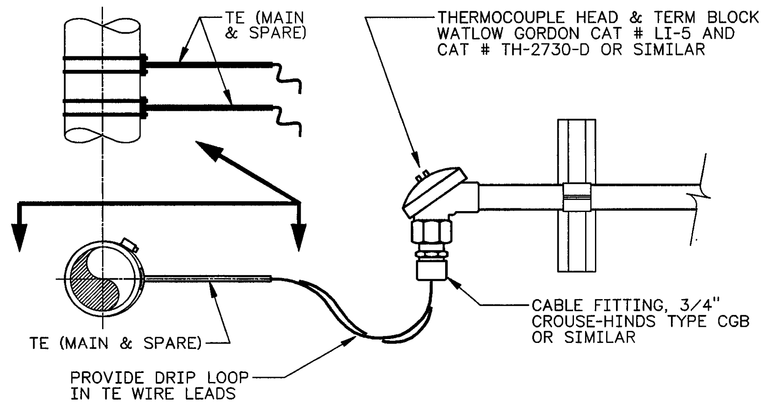

5 SH 1 DETAIL SCALE: NONE 1a

SEE SHEET 1 FOR NOTES.

GREGORY P. McDONALD STATE OF WASHINGTON 20372 REGISTERED PROFESSIONAL ENGINEER 11-20-97 Rev 1

EXPIRES 05/30/99

DESIGNED	GJ KUBINSKI	DATE	
DSGN ENGR	ML ALEXANDER	9-28 1995	
CHECKED	AR SNOWHITE	9-28 1995	
SAFETY	SEE DR/AT FORM		
ENVIR	SEE DR/AT FORM		
QUAL ENGR	SEE DR/AT FORM		
LEAD ENGR	ML ALEXANDER	9-29 1995	
REVIEW NO.	4	9/8 1995	
APPROVED FOR IMPLEMENTATION BY	C VAN KATWIJK		
FOR	WHC	DATE	10-13-95

SAFETY CLASS	3
USE	CONSTRUCTION
EDT	612958

M U.S. DEPARTMENT OF ENERGY
RICHLAND OPERATIONS OFFICE
ICF KAISER HANFORD COMPANY

ELECTRICAL
RACEWAY SUPPORT DETAILS
VENT STATION 6241-V

PROJECT W058, REPLACEMENT OF CROSS-SITE TRANSFER SYSTEM

SIZE	BLDG NO.	INDEX NO.	DWG NO.	REV NO.
F	6241-V	7301 7501	H-6-14015	1

SCALE SHOWN JOB NO. CR1320 SHEET 2 OF 2

MF	REV NO.	DESCRIPTION	REV BY DATE	KEH APPROVALS	APVD FOR IMPL/INC FOR DATE
S	1	b) INC ECN W-058-238 a) INC ECN W-058-166 W-058 PROJECT TURNOVER	CLC 8-13 1997		11/21/97

REVISIONS

NUMBER	TITLE	NUMBER	TITLE
DRAWING TRACEABILITY LIST		REFERENCES	
		NEXT USED ON	

CAD FILE F014015B CAD CODE 2J:IBM:ACD2:12.0:NN XREFS N

2 PLOT SCALE: 1=48 KEHCAD 1

KEH 0350.00 (03/94) STRTKEHF: 19940303.0900