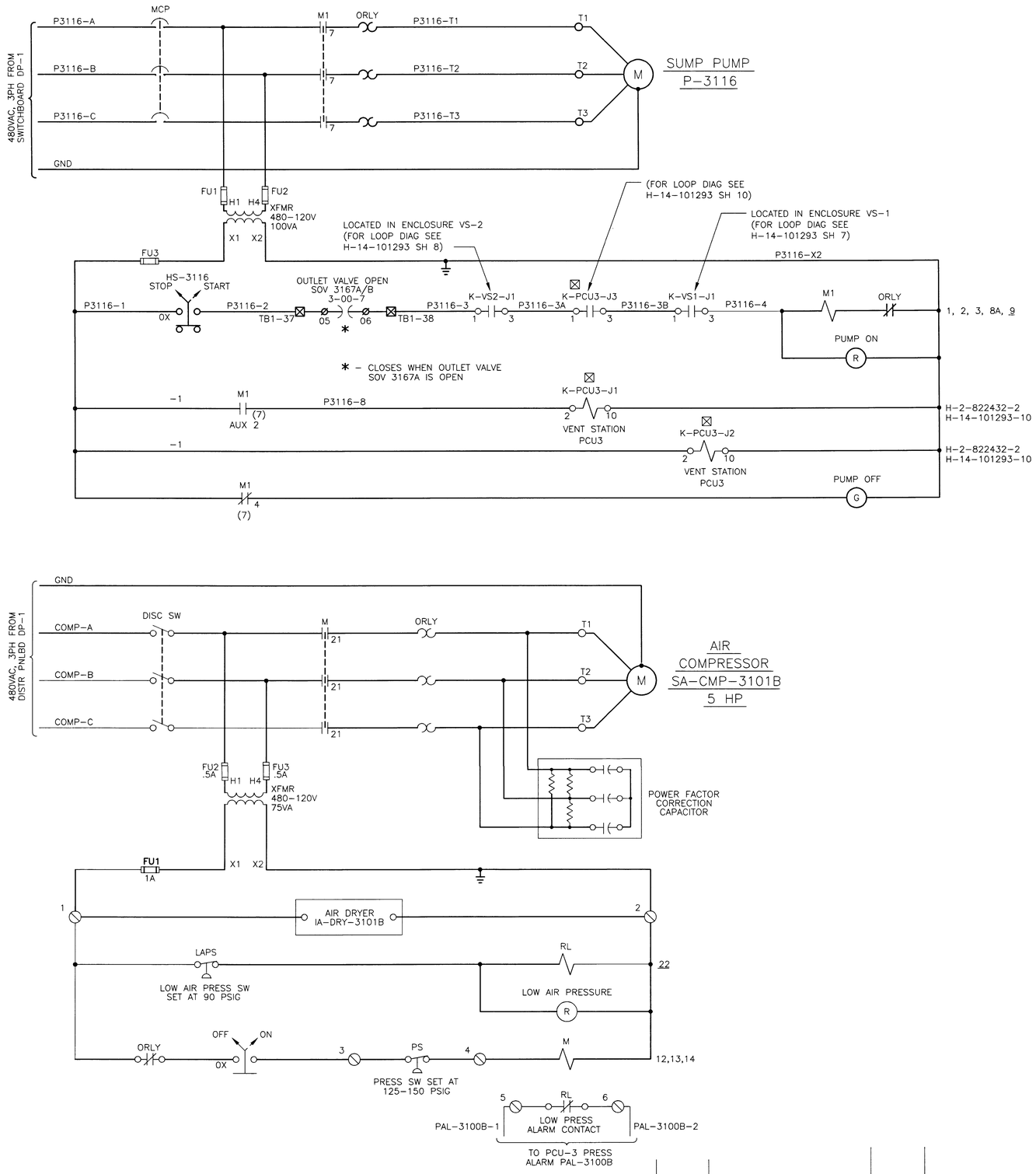

LEGEND:

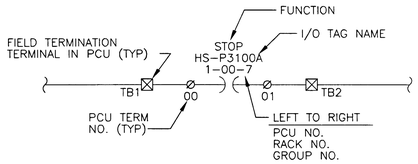

⊠ – LOCATED IN PCU-3 CABINET

□ – LOCATED IN TB-1 TERMINATION BOX

⊘ – TERMINAL LOCATED IN VENDOR SUPPLIED MOTOR STARTER

NOTES:

1. ABBREVIATIONS ARE PER ANSI Y1.1.
2. FOR SYMBOL LIST, SEE DWG H-7-1275.
3. ALL CONTACTS SHOWN IN THE DE-ENERGIZED POSITION.
4. ALLEN-BRADLEY CONTACTS (SHELF STATUS) ARE NORMALLY OPEN CONTACTS WHICH ARE REQUIRED TO BE CLOSED UNDER NORMAL OPERATION WILL BE HELD CLOSED BY THE PCU.

SUPERSEDES DWG
H-14-101299-4, REV 1

NOV 20 2003
DATE
STA
HANFORD
RELEASE
ID

ESSENTIAL DRAWING

DESIGNED GJ KUBINSKI DATE		EDT 612958	
DSGN ENGR ML ALEXANDER 9-29 1995	U.S. DEPARTMENT OF ENERGY		
CHECKED AR SNOWHITE 9-29 1995	OFFICE OF RIVER PROTECTION		
SAFETY SEE DR/AT FORM	ELECTRICAL ELEMENTARY DIAGRAMS VENT STATION 6241-V		
ENVIR SEE DR/AT FORM			
QUAL ENGR SEE DR/AT FORM			
LEAD ENGR ML ALEXANDER 9-29 1995	PROJECT W058, REPLACEMENT OF CROSS-SITE TRANSFER SYSTEM		
APPROVED FOR IMPLEMENTATION BY C. VAN KATWIJK FOR WHC DATE 10-13-95	SIZE F / BLDG NO. 6241V / INDEX NO. 7502 / DWG NO. H-6-14018		REV NO. 2
	SCALE NONE / JOB NO. CR1320		SHEET 1 OF 3

NUMBER	TITLE	NUMBER	TITLE
DRAWING TRACEABILITY LIST		H-2-822200 DRAWING LIST	
		REFERENCES	
		NEXT USED ON	

MFD	REV NO	DESCRIPTION	REV BY DATE	CHK BY DATE	DFTG APVD DATE	ENGR	COMPANY
RS	2	INCORP ECN 675436, 674246, & 665151	TKE BAM 6/03				

REVISIONS

KEHCAD 21141 1

KEH 0350.00 (03/94)