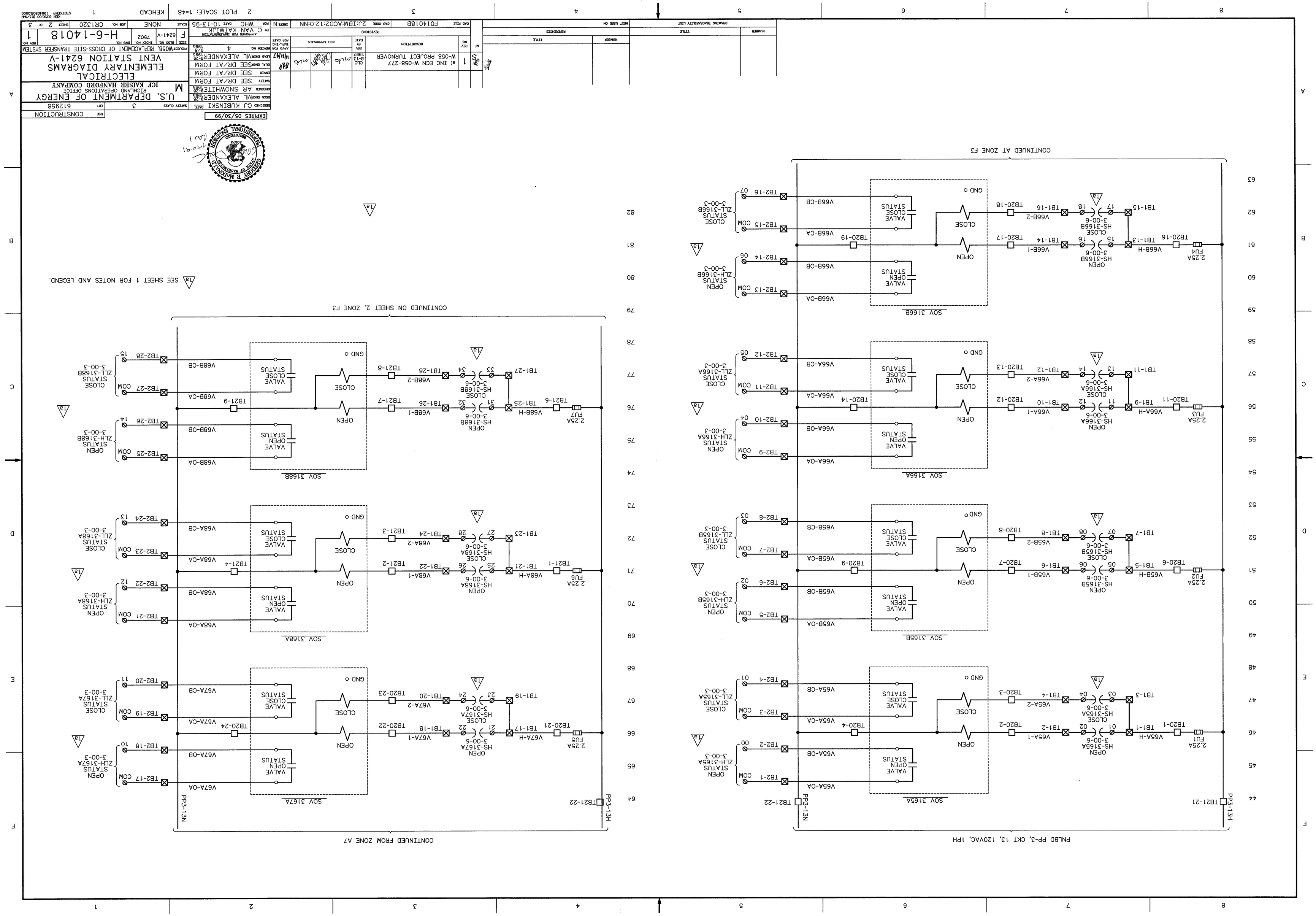
CONTINUED AT ZONE F3
PNLBD PP-3, CKT 13, 120VAC, 1PH
CONTINUED ON SHEET 2, ZONE F3
CONTINUED FROM ZONE A7
SOV 316SA
SOV 316SB
SOV 316SA
SOV 316SB
SOV 316SA
SOV 316SB
SOV 316SA
SOV 316SB
OPEN
CLOSE
GND
VALVE OPEN STATUS
VALVE CLOSE STATUS
OPEN STATUS ZLH-316SA 3-00-3
OPEN STATUS ZLH-316SB 3-00-3
CLOSE STATUS ZLL-316SA 3-00-3
CLOSE STATUS ZLL-316SB 3-00-3
PP3-13N
PP3-13H
TB21-22
TB21-21
2.25A FU1
2.25A FU2
2.25A FU3
2.25A FU4
2.25A FU5
2.25A FU6
2.25A FU7
V65A-H
V65A-1
V65A-2
V65A-CA
V65A-CB
V65A-OA
V65A-OB
V65B-H
V65B-1
V65B-2
V65B-CA
V65B-CB
V65B-OA
V65B-OB
V66A-H
V66A-1
V66A-2
V66A-CA
V66A-CB
V66A-OA
V66A-OB
V66B-H
V66B-1
V66B-2
V66B-CA
V66B-CB
V66B-OA
V66B-OB
V67A-H
V67A-1
V67A-2
V67A-CA
V67A-CB
V67A-OA
V67A-OB
V68A-H
V68A-1
V68A-2
V68A-CA
V68A-CB
V68A-OA
V68A-OB
V68B-H
V68B-1
V68B-2
V68B-CA
V68B-CB
V68B-OA
V68B-OB
HS-316SA 3-00-6
HS-316SB 3-00-6
HS-316SA 3-00-6
HS-316SB 3-00-6
HS-316SA 3-00-6
HS-316SB 3-00-6
HS-316SA 3-00-6
HS-316SB 3-00-6
TB20-1
TB20-2
TB20-3
TB20-4
TB20-6
TB20-7
TB20-8
TB20-9
TB20-11
TB20-12
TB20-13
TB20-14
TB20-16
TB20-17
TB20-18
TB20-19
TB20-21
TB20-22
TB20-23
TB20-24
TB21-1
TB21-2
TB21-3
TB21-4
TB21-6
TB21-7
TB21-8
TB21-9
TB1-1
TB1-2
TB1-3
TB1-4
TB1-5
TB1-6
TB1-7
TB1-8
TB1-9
TB1-10
TB1-11
TB1-12
TB1-13
TB1-14
TB1-15
TB1-16
TB1-17
TB1-18
TB1-19
TB1-21
TB1-22
TB1-23
TB1-24
TB1-25
TB1-26
TB1-27
TB1-28
TB2-1
TB2-2
TB2-3
TB2-4
TB2-5
TB2-6
TB2-7
TB2-8
TB2-9
TB2-10
TB2-11
TB2-12
TB2-13
TB2-14
TB2-15
TB2-16
TB2-17
TB2-18
TB2-19
TB2-20
TB2-21
TB2-22
TB2-23
TB2-24
TB2-25
TB2-26
TB2-27
TB2-28
COM
14a
EXPIRES 05/30/99
DESIGNED CJ KUBINSKI DATE
DRAWN AR SNOWHITE 9-28-1995
CHECKED AR SNOWHITE 9-28-1995
DSGN ENGNL ALEXANDER 9-28-1995
DRAWN SEE DR/AT FORM
SAFETY SEE DR/AT FORM
DRAWN SEE DR/AT FORM
DSGN ENGNL ALEXANDER 9-28-1995
DRAWN SEE DR/AT FORM
DSGN ENGNL ALEXANDER 9-28-1995
APVD FOR CONSTRUCTION
APVD FOR REVIEW NO. 4 9-8-1995
APVD FOR INSPECTION
BY C VAN KATWYK
FOR WHC DATE 10-13-95
SAFETY CLASS 3
USE CONSTRUCTION
EDT 612958
U.S. DEPARTMENT OF ENERGY
RICHLAND OPERATIONS OFFICE
ICP KAISER HANFORD COMPANY
M
ELECTRICAL
ELEMENTARY DIAGRAMS
VENT STATION 624I-V
PROJECT WO58, REPLACEMENT OF CROSS-SITE TRANSFER SYSTEM
SIZE F
BLDG NO. 624I-V
INDEX NO. 7502
DWG NO. H-6-14018
SCALE NONE
JOB NO. CR1320
SHEET 2 OF 3
REV NO. 1
REV NO. 1
DESCRIPTION a) INC ECN W-058-277 W-058 PROJECT TURNOVER
BY CLC
DATE 8-13-1997
REV APPROVALS
DATE 11/13/97
REVISIONS
CAD FILE F0140188
CAD CODE 2J:IBM:ACD2:2.0:NN
XREFS N
PLOT SCALE: 1=48
KEHCAD
STRIKING: 1994030250900
KEH 0350.00 (03/94)