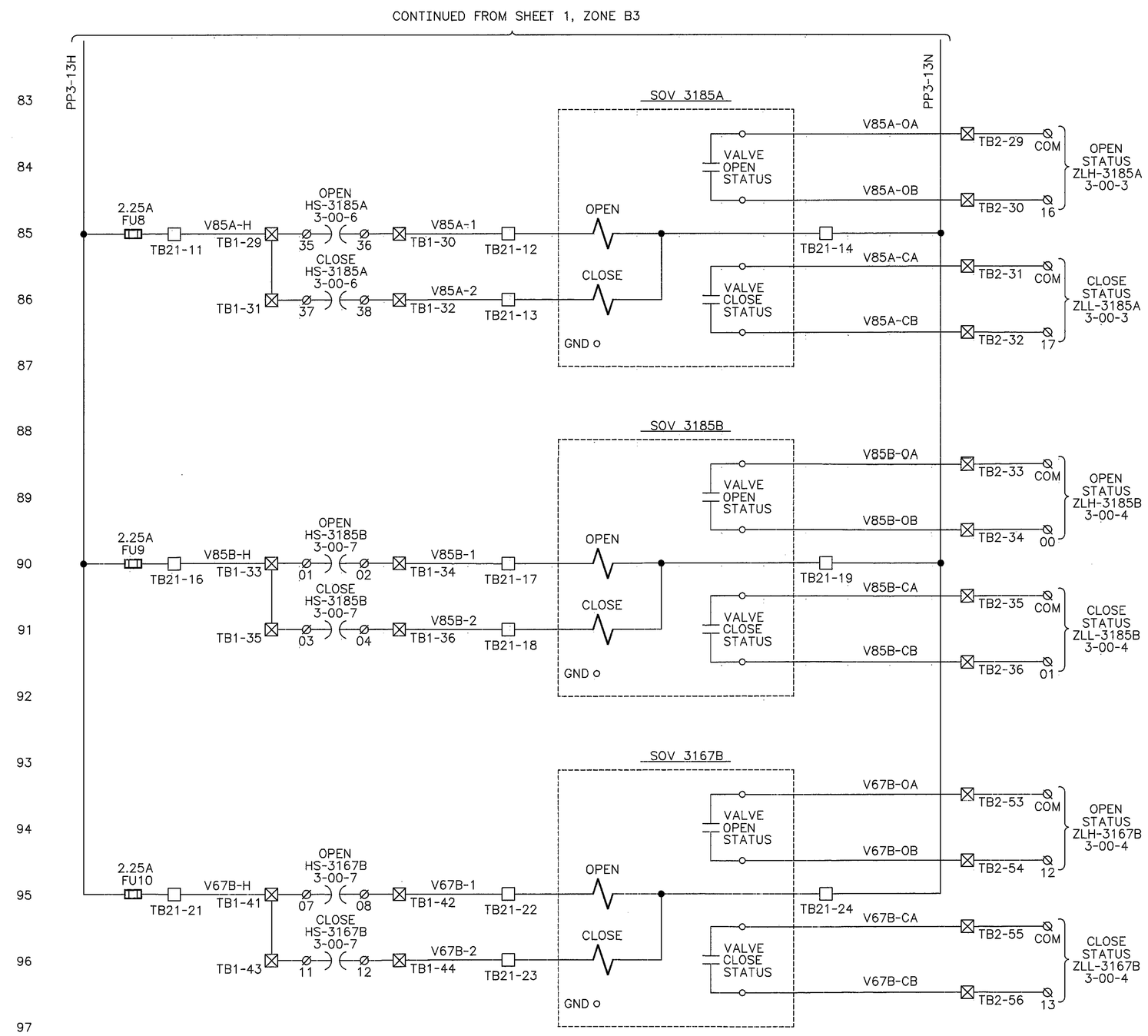

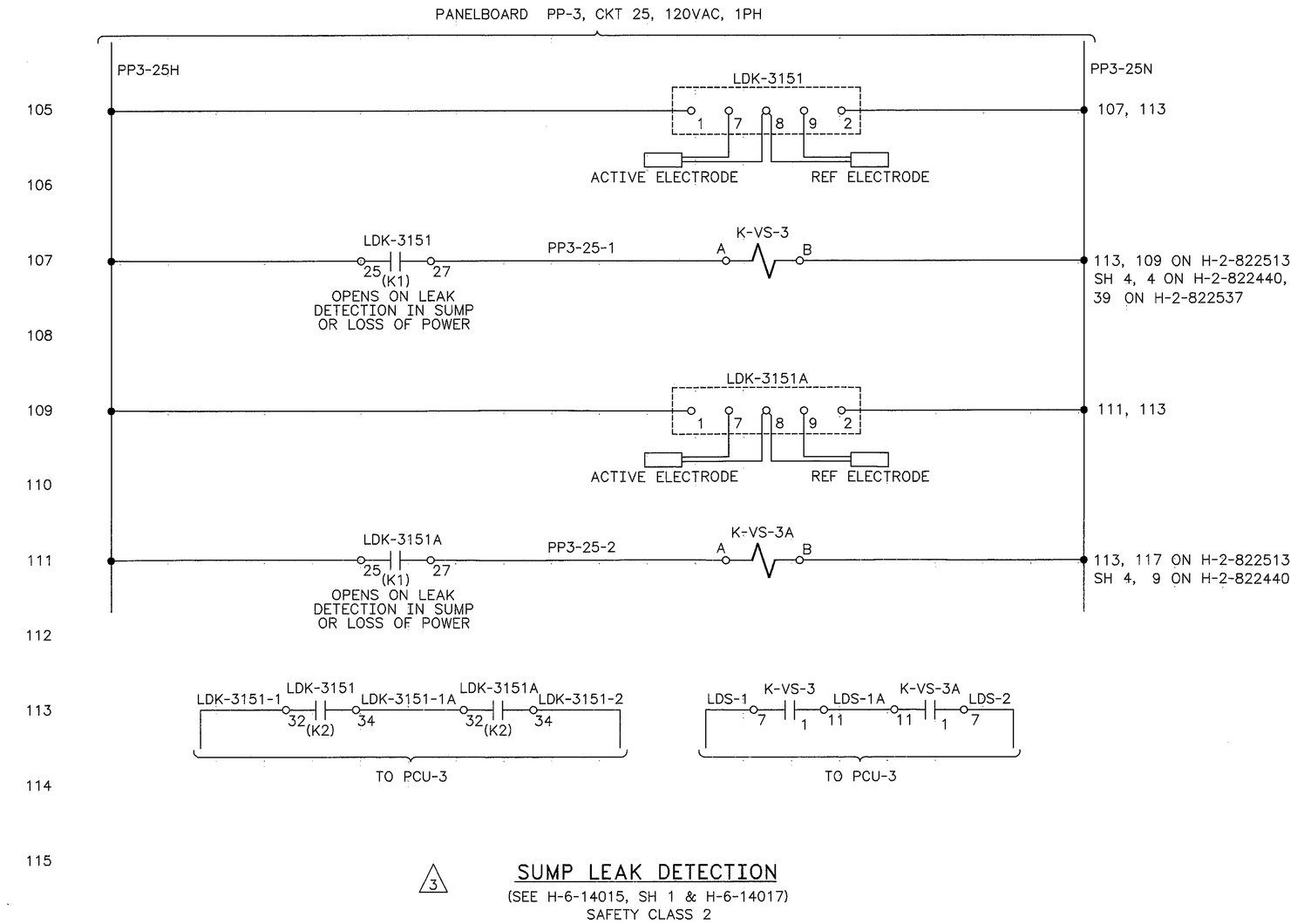

3 SUMP LEAK DETECTION
(SEE H-6-14015, SH 1 & H-6-14017)
SAFETY CLASS 2

SEE SHEET 1 FOR NOTES AND LEGEND.

GREGORY P. McDONALD STATE OF WASHINGTON 20372 REGISTERED PROFESSIONAL ENGINEER
4-3-98 Rev 3

EXPIRES 05/30/99

DESIGNED	GJ KUBINSKI	DATE	
DSGN ENGR	ML ALEXANDER	8/10 1995	
CHECKED	AR SNOWHITE	8/11 1995	
SAFETY	SEE DR/AT FORM		
ENVIR	SEE DR/AT FORM		
QUAL ENGR	SEE DR/AT FORM		
LEAD ENGR	ML ALEXANDER	8/14 1995	
REVIEW NO.	3	8-10 1995	
APPROVED FOR IMPLEMENTATION BY	C VAN KATWIJK		
FOR	WHC	DATE	10/13/95

SAFETY CLASS 2 — USE CONSTRUCTION — EDT 612958

M U.S. DEPARTMENT OF ENERGY
RICHLAND OPERATIONS OFFICE
ICF KAISER HANFORD COMPANY

ELECTRICAL
ELEMENTARY DIAGRAMS
VENT STATION 6241-V

PROJECT W058, REPLACEMENT OF CROSS-SITE TRANSFER SYSTEM

SIZE	BLDG NO.	INDEX NO.	DWG NO.	REV NO.
F	6241-V	7502	H-6-14018	3

SCALE NONE — JOB NO. CR1320 — SHEET 3 OF 3

MF	REV NO.	DESCRIPTION	REV BY DATE	KEH APPROVALS	APVD FOR IMPL/INC FOR DATE
RS	3	INCORPORATED ECN W058-381 W-058 PROJECT TURNOVER	HBM 3/13 1998	JLH 4/13/98	4-6-98

REVISIONS

CAD FILE F014018C — CAD CODE 2J:IBM:ACD2:12.0:NN — XREFS N

NUMBER	TITLE

DRAWING TRACEABILITY LIST — REFERENCES — NEXT USED ON

PLOT SCALE: 1=48 — KEHCAD — KEH 0350.00 (03/94) STRTKEHF: 199403030900