THE HANFORD SITE

Stabilization of the 216-Z-2 Crib, 216-Z-9 Crib, and 241-Z-361 Settling Tank

Al Farabee
Richland Operations Office
U.S. Department of Energy

May 2020

Purpose

- Inform attendees of the recent DOE grouting decision to protect the public and environment from the potential to spread contamination
- Provide history and technical and regulatory basis for the decision
- Provide forum for discussion and methodology for submission of comments
- Clarify the nature of the interim protective action

Background

- Following the partial collapse of Plutonium Uranium Extraction Plant (PUREX) Tunnel 1 in 2017, both PUREX tunnels were stabilized with engineered grout
- Due to DOE's risk-based focus at Hanford, a qualitative evaluation of structural stability was performed on other underground structures
- Based on the evaluation, 11 structures were selected for an analysis to ascertain the risk of failure
- Several structures were identified as overstressed, in accordance with current engineering standards, and subject to age-related failure
- Based on that analysis, the following three underground structures were selected as the highest priority for stabilization
    - 216-Z-2 Crib
    - 241-Z-361 Settling Tank
    - 216-Z-9 Crib
- All three structures are within the current Plutonium Finishing Plant (PFP) demolition work zone

Regulatory Basis for Stabilization

- To protect the public and the environment, the three structures will be stabilized with engineered grout to avoid potential collapse
- The stabilization will be performed as an interim protective action and will not preclude the final remedy as selected in the record of decision
- The action will be performed as a time-critical removal action under the *Comprehensive Environmental Response, Compensation and Liability Act*
- DOE is the lead agency and EPA is the lead regulatory agency

Site Location

All three sites are located within the current PFP demolition work zone, as shown below

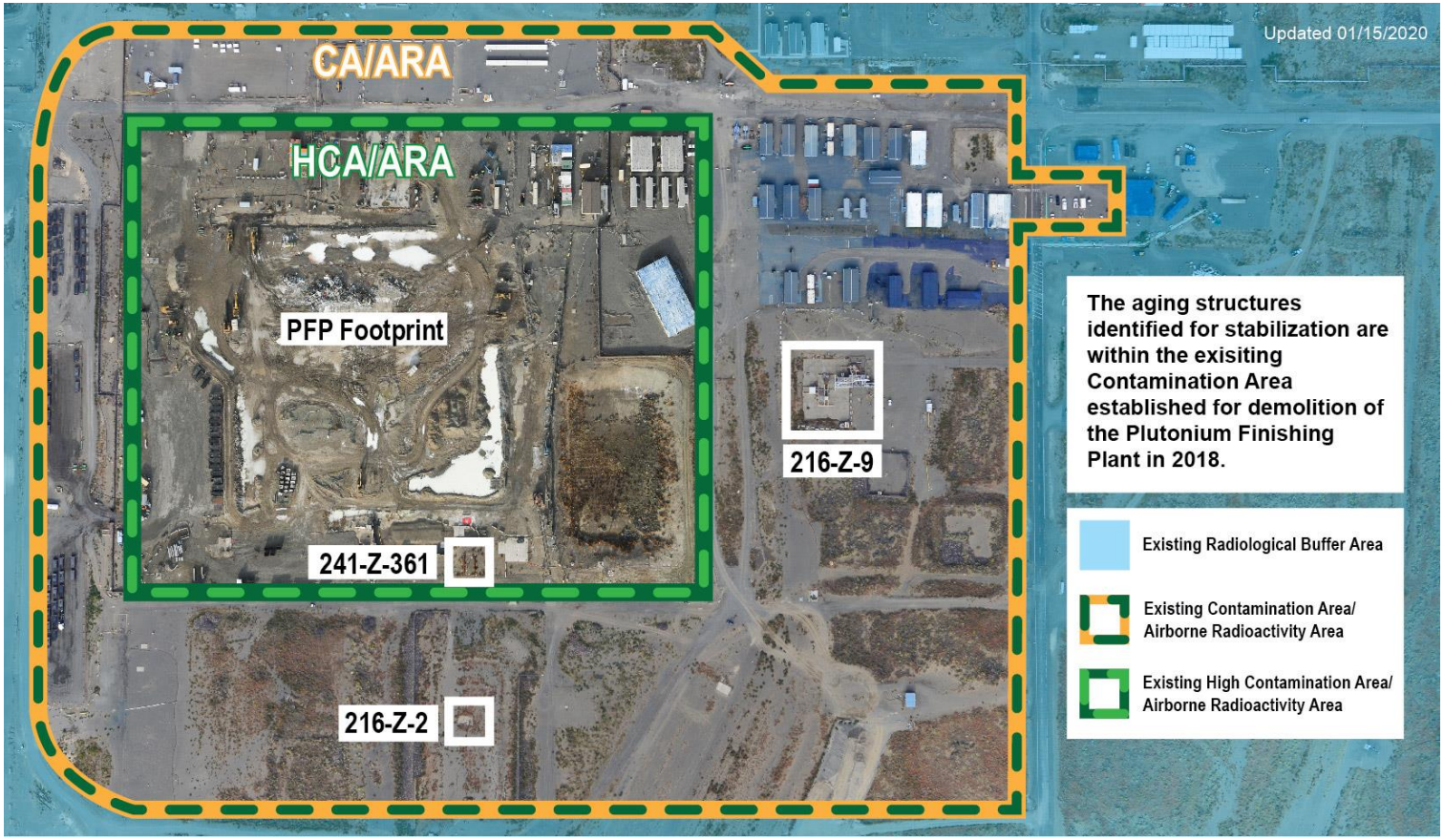

216-Z-2 Crib Description and History

Operations: 1949 to 1969

Size: Excavated to 14 feet square and 21 feet deep; a 12-foot-square, 14-foot-tall open-bottom wooden box was installed within the excavation for support

Waste Disposed: Together with 216-Z-1, the cribs received about 10 million gallons of waste, mostly from the PFP

Contamination: Estimated discharge to cribs includes 6.8 kg of plutonium

Estimated Grout Volume Required to Stabilize: 75 cubic yards

Estimated Completion: Fall 2020

216-Z-2 Crib Location and Design

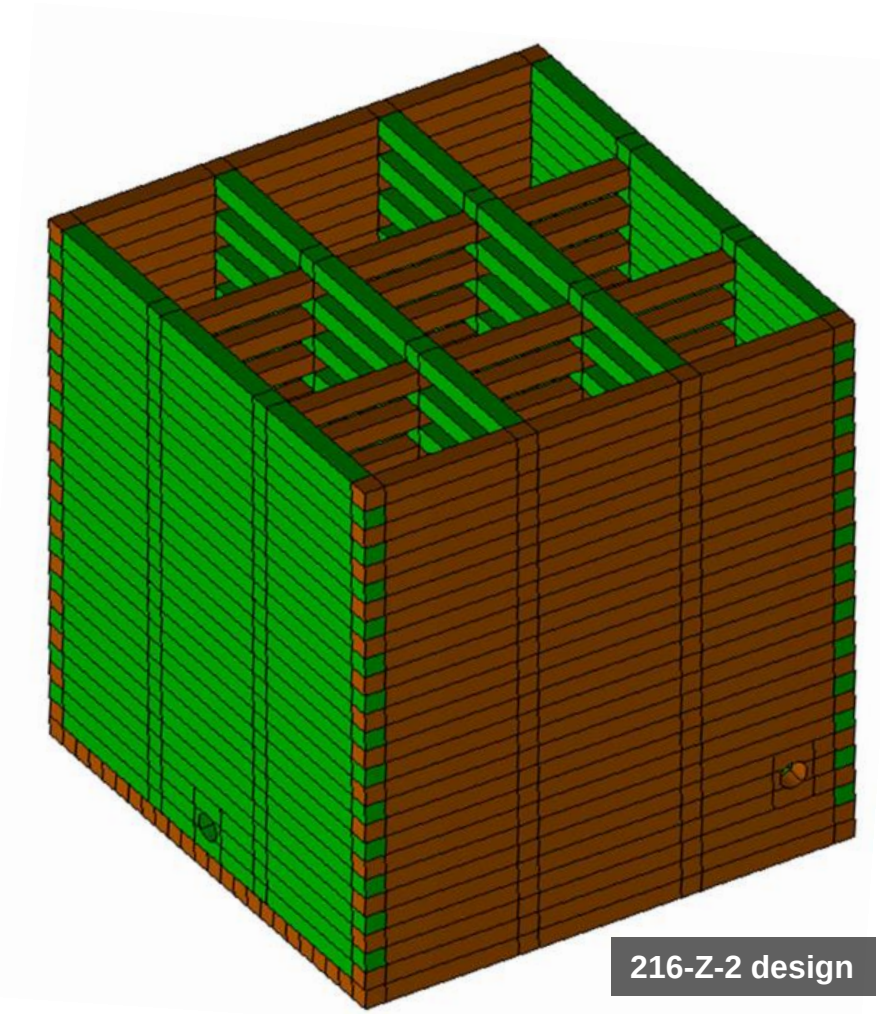

Photo taken in (2016). Subsidence over Z-1 has been backfilled.

216-Z-9 Crib Description and History

Operations: 1955 to 1962

Size: 20-foot-deep excavation (120 by 90 feet) sloping to a 60-by-30-foot floor, with a concrete cover supported by six concrete columns

Waste Disposed: Received approximately 1 million gallons of waste from PFP

Contamination: An estimated 48 kg of plutonium remains in the crib

Estimated Grout Volume Required to Stabilize: 4,000 cubic yards

Estimated Completion: Fall/winter 2020

216-Z-9 Crib Location and Design

216-Z-9 aerial

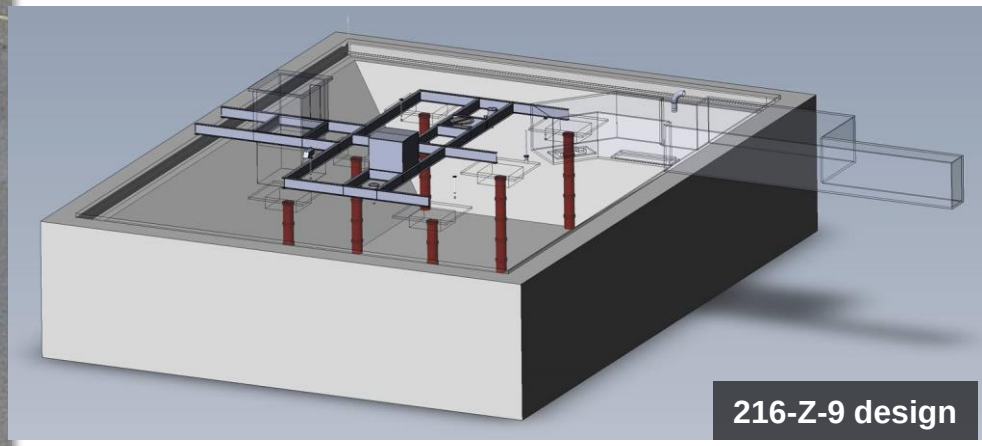

216-Z-9 design

216-Z-9 Crib

216-Z-9 interior

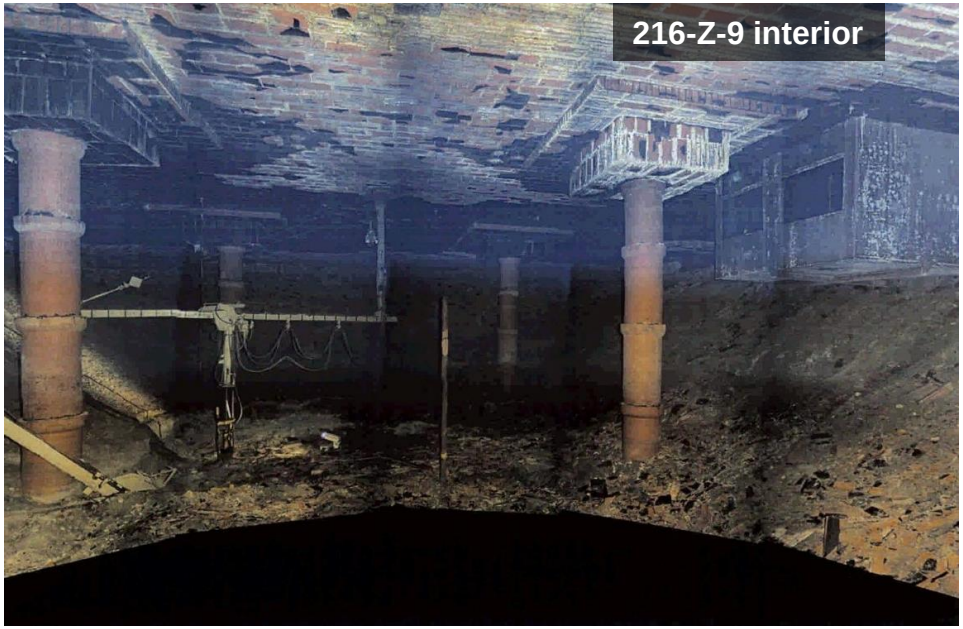

216-Z-9 interior

241-Z-361 Settling Tank Description and History

Operations: 1949 to 1973

Size: Reinforced concrete structure 28 feet long and 15 feet wide, with a 3/8-inch-thick steel liner

Waste Disposed: Received liquid waste from the PFP complex, including the main processing facility and Plutonium Reclamation Facility

Contamination: An estimated 29 kg of plutonium remains in the tank

Estimated Grout Volume Required to Stabilize: 125 cubic yards

Estimated Completion: Fall 2020

241-Z-361 Settling Tank Location and Design

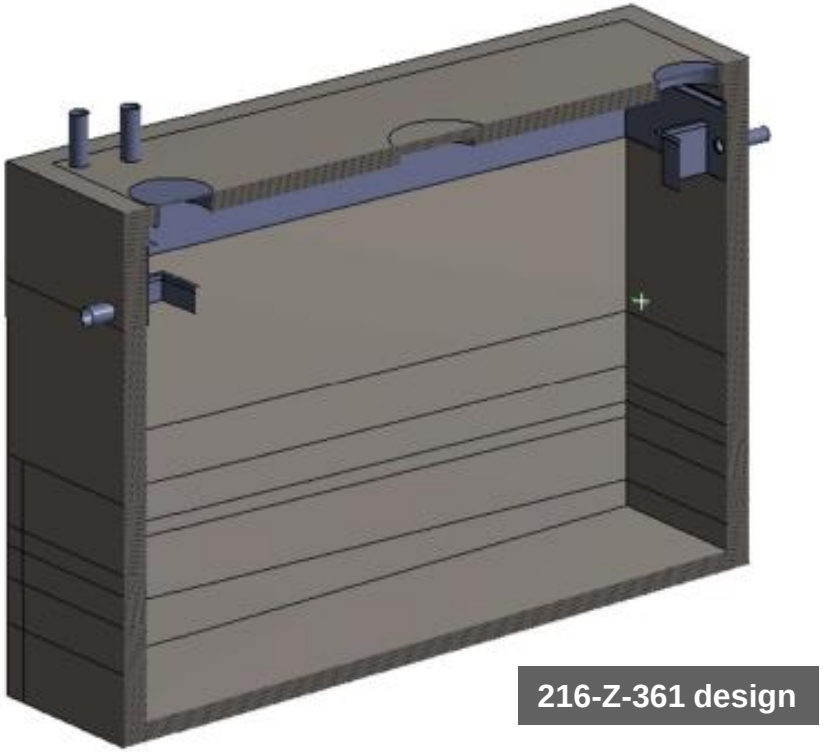

241-Z-361 Settling Tank

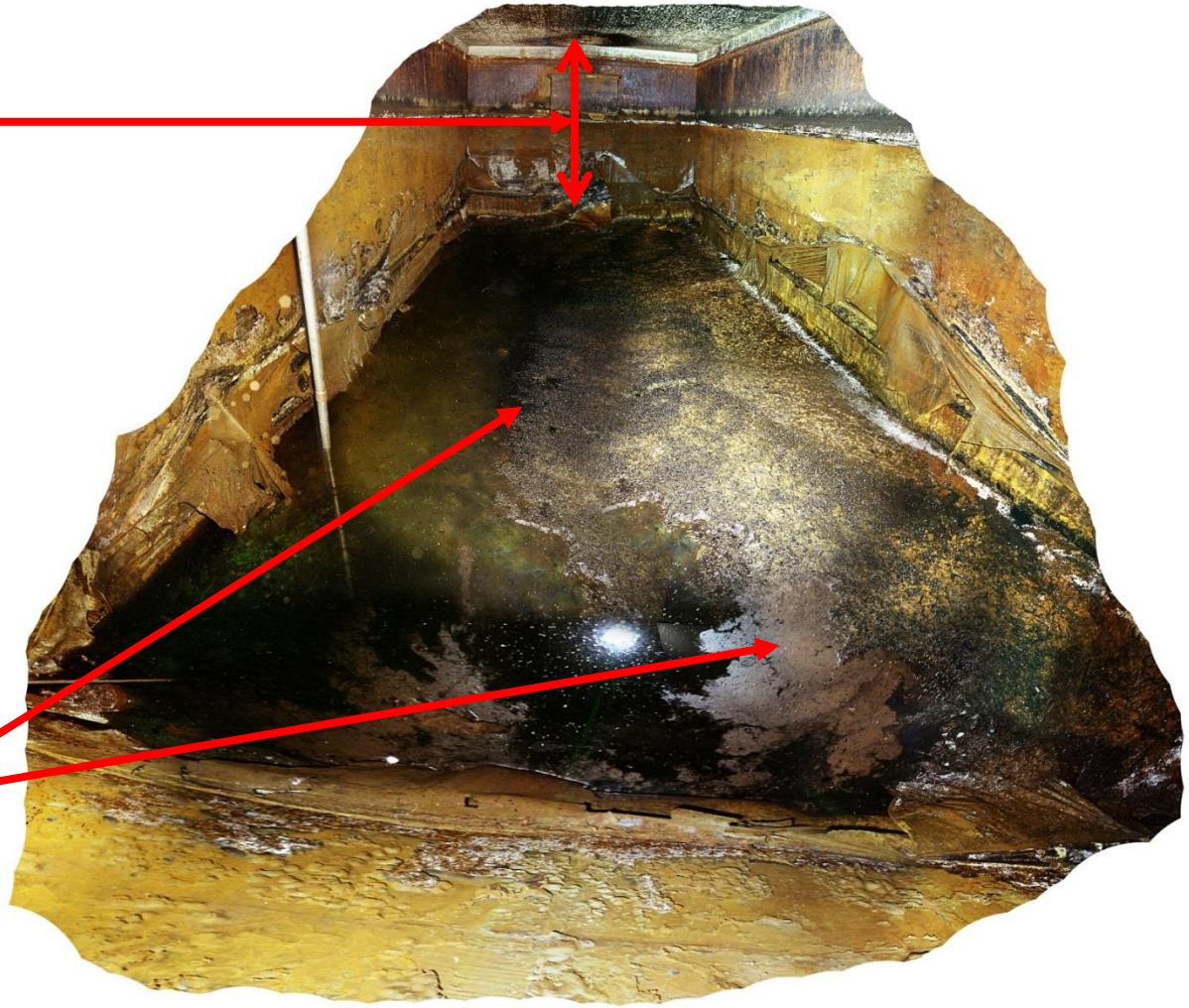

Basis for Stabilization Methodology

- Partial Collapse of PUREX Tunnel 1 in May 2017
- Structural analysis of PUREX Tunnel 2
- Convening of expert panel to review stabilization option
- Nine options were considered by the panel
- One additional functional option was considered for the structures

Basis for Stabilization Methodology (cont.)

Option 1: Installation of a high-density polyethylene (HDPE) cover material over the area with the potential for collapse.

Criteria							
Protection of human health	Allows future remedial action	Ease of implementation	Ease of upkeep	Speed of implementation	Cost	Chemical Compatibility	Comments
🟡	🟢	🟢	🔴	🟢	🟢	🟢	In the event of collapse, cover will inhibit the spread of contamination of some degree, but does not provide containment. Lack of durability limits its effectiveness for long-term use.

Option 2: Installation of soft-surface tent cover over the area with the potential for collapse.

🟡	🟢	🟢	🟡	🟢	🟡	🟢	In the event of collapse, tent will provide somewhat better contamination control than HDPE cover, but does not provide containment. Susceptible to weather damage that would require periodic repair or placement.

Option 3: Installation of hard-surface tent cover over the area with the potential for collapse.

🟡	🟢	🟢	🟡	🟢	🟡	🟢	More effective contamination control than HDPE of soft tent, but still does not provide containment in the event of the collapse.

🟢 Option performs well with the criterion compared to other options and generally has no significant drawbacks related to performance.

🟡 Option performs acceptably with the criterion compared to other options, but may have areas of concern.

🔴 Option performs poorly with the criterion compared to other options or has major drawbacks or concerns.

Basis for Stabilization Methodology (cont.)

Option 4: Construction of a building over the area with the potential for collapse.

Criteria							
Protection of human health	Allows future remedial action	Ease of implementation	Ease of upkeep	Speed of implementation	Cost	Chemical Compatibility	Comments
🟡	🟢	🟡	🟡	🟡	🔴	🟢	Could be designed with ventilation to provide effective contamination control, but would be time-consuming and more expensive than other options involving exterior covers. Has the potential to trigger collapse during construction.

Option 5: Fill the structures with the potential for collapse with expanding foam.

🟢	🟡	🔴	🟢	🟡	🟡	🔴	Will provide additional stability and contamination control structures. Key concerns are heat and off-gas generation during filling, potential fire hazards and unknown performance in high radiation areas of the long-term. Use at the Hanford Site has been previously rejected based on fire protection requirements.

Option 6: Cause a controlled collapse within the structures with the potential for unintended collapse.

🟢	🟡	🔴	🟢	🟡	🔴	🟡	More effective contamination control than HDPE of soft tent, but still does not provide containment in the event of the collapse.

Basis for Stabilization Methodology (cont.)

Option 7: Retrieve wastes from the structures with the potential for collapse prior to stabilization with grout.

Criteria							
Protection of human health	Allows future remedial action	Ease of implementation	Ease of upkeep	Speed of implementation	Cost	Chemical Compatibility	Comments
🟢	🟢	🔴	🟢	🔴	🔴	🟡	Provides a permanent solution, but would involve an extended and technically challenging effort for facility and equipment design, construction and implementation. Very lengthy and expensive effort in comparison to other options.

Option 8: Fill structures with the potential for collapse with engineered grout.

🟢	🟡	🟢	🟢	🟢	🟡	🟢	Considerable experience at the Hanford Site implementing large grouting operations. Characterization of stored wastes to support treatment and disposition can be accomplished using process knowledge and observational approach during future closure and remediation. Complicates ability to segregate wastes requiring different disposition paths.

Basis for Stabilization Methodology (cont.)

Option 9: Enhance surveillance and monitoring of the structures with the potential for collapse.

Criteria							
Protection of human health	Allows future remedial action	Ease of implementation	Ease of upkeep	Speed of implementation	Cost	Chemical Compatibility	Comments
🟡	🟢	🟢	🟢	🟡	🟢	🟢	Remote imaging, sensing and entry tools can be investigated and implemented where feasible.

Option 10: Fill the structures with the potential for collapse with lightweight cellular concrete.

🟡	🟢	🟡	🟢	🟡	🟡	🔴	Lightweight cellular concrete has been successfully used on large-scale commercial projects, mainly in the transportation sector (e.g. flowable fill, backfill slope stabilization). Though a mature technology, it relies heavily on complex chemical reactions that will present potentially prohibitive challenges when used in a Nuclear Hazard Category 2 facility, such as 241-Z-361. The functionality, or risks of reaction/fire between the cellular concrete chemicals and the contents of the 241-Z-361 tank are not full understood at this time, and the unknown risk is likely to be problematic and cause delay in design and deployment.

Field Activities Considerations

- Complete PFP demolition activities
- Engage workforce on stabilization sequence and performance
- Traffic Safety (grout delivery trucks)
  - Day shift for 216-Z-2 and 241-Z-361 (200 cubic yards)
  - Instead of day shift, consider night shift for 216-Z-9 (approximately 4,000 cubic yards)

Key Takeaways

- DOE has decided to stabilize three underground structures with engineered grout to protect the public and environment from the potential spread of contamination
- The decision has been made based on the risk and previous success of use of engineered grout at Hanford
- This action is an interim protective measure

More Information

- Aging Structures webpage: https://go.usa.gov/xdUCn
- Comment period open through June 29
- Submit comments electronically (preferred) to AgingStructures@rl.gov or in writing to:

U.S. Department of Energy
Attn: Jennifer Colborn
P.O. Box 450, H6-60
Richland, WA 99352

Questions?

The Hanford Reach
White Bluffs Overlooking the Columbia River