HANFORD CROSS-SITE TRANSFER SYSTEM PROJECT W-058 OPERATOR INTERFACE DOCUMENATION

DT HEIMBERGER
CH2MHILL HANFORD COMPANY
Richland, WA 99352
U.S. Department of Energy Contract DE-AC27-99RL14047

EDT/ECN: 724466 R0 UC:
Cost Center: 7G210 Charge Code:
B&R Code: Total Pages: 273

Key Words: 241-SY, CROSS-SITE, 242-S

Abstract:
This document describes the software for the Replacement Cross-site transfer system Operator interface.
Trademark Credits:
Pentium is a trademark of Intel Corporation
Allen-Bradely is a trademark of Allen-Bradely Corporation
RsView is a trademark of Rockwell Software Inc.

TRADEMARK DISCLAIMER. Reference herein to any specific commercial product, process, or service by trade name, trademark, manufacturer, or otherwise, does not necessarily constitute or imply its endorsement, recommendation, or favoring by the United States Government or any agency thereof or its contractors or subcontractors.

Printed in the United States of America. To obtain copies of this document, contact: Document Control Services, P.O. Box 950, Mailstop H6-08, Richland WA 99352, Phone (509) 372-2420; Fax (509) 376-4989.

DATE: FEB 12 2007
HANFORD RELEASE
STA: 4 ID: 8

Release Approval — Date 2/12/07 — Release Stamp

Approved For Public Release

Tank Farm Contractor (TFC) **RECORD OF REVISION**	(1) Document Number: RPP-11538	Page 1

(2) Title:

HANFORD CROSS-SITE TRANSFER SYSTEM PROJECT W-058 OPERATOR INTERFACE DOCUMENATION

Change Control Record

(3) Revision	(4) Description of Change – Replace, Add, and Delete Pages	Authorized for Release	
		(5) Resp. Engr. (print/sign/date)	(6) Resp. Mgr. (print/sign/date)
0	INITIAL RELEASE	JA BEWICK	CW JORGENSEN
1	REVISED PER ECN-723359 RO	WD WINKELMAN	CW JORGENSEN
RS 2	REVISED PER ECN-724466 RO	DT HEIMBERGER 2/5/07	~~TC OTEN~~ B. THACKER for B. Thacker per Telecon

Hanford Cross-site Transfer System Project W-058 Operator Interface Documentation

Wayne D. Winkelman
CH2M HILL Hanford Group, Inc.

Date Published

January 2007

Post Office Box 1500
Richland, Washington

Prepared for the U.S. Department of Energy
Office of River Protection

Contract No. DE-AC27-99RL14047, Modification M030

Approved for public release; distribution is unlimited

TABLE OF CONTENTS

PAGE

TABLE OF CONTENTS ..... **II**
OPERATOR INTERFACE DOCUMENTATION **3**
1 GENERAL **3**
2 TERMS AND DEFINITIONS **3**
3 DOCUMENT SCOPE **3**
4 CROSS-SITE TRANSFER SYSTEM OIT DOCUMENTATION **3**
4.1 System Description **3**
4.2 Operator Interface and Document Changes **4**
5 CONTROL SYSTEM ALARM CONFIGURATION **4**
5.1 Operator Interface User's Manual Alarm Overview **4**
5.1.1 RSView32 Alarm Severities Configuration Window **5**
5.1.2 RSView32 Alarm Configurations from the Project Documentor **6**
5.1.2.1 Maintenance Station Alarm Severities 6
5.1.2.2 Operations Station Alarm Severities 6
APPENDIX A RSView32 Project Documentor Listing **7**

The RSView32 Project Documentor generates its own Table of Contents (TOC) as part of its printout. This subset TOC is included in Appendix A of this document which includes the full RSView32 Project Documentor listing.

Operator Interface Documentation

1 General

The purpose of the RPP-11538 document is to define the operator interface characteristics for the Cross-Site Transfer System installed under Project W-058. The full control system documentation is broken down into three parts: RPP-11537 provides an operator's manual and overall system documentation, HNF-2346 contains the PLC program listings, and RPP-11538 contains the RSView32 Project Documentor listing. These documents update and, where applicable, supercede the vendor information supplied with the system when it was installed.

2 Terms and Definitions

The following terms and acronyms may be used in this document:

A-B	- Allen-Bradley, a Rockwell Automation Company
DH+	- Data Highway +, a communication network and protocol
GUI	- Graphical User Interface, alternate term for OIT
HMI	- Human Machine Interface, alternate term for OIT
IED	- Intelligent Electronic Device
OIT	- Operator Interface Terminal, including the custom application
PC	- Personal Computer
PCS	- Programmable Control Services, Inc. dba PCS UtiliData
PLC	- Programmable Logic Controller
PLC-5	- Specific model of PLC manufactured by Allen-Bradley
SCADA	- Supervisory Control and Data Acquisition
TCP/IP	- Transmission Control Protocol / Internet Protocol
UPS	- Uninterruptible Power Supply
CHG	- CH2M Hill Hanford Group, Inc.
OCS	- Operator Control Station, alternate term for OIT
OIM	- Operator Interface Machine, in this case a PC
PCU	- Process Control Unit, in this case a PLC system

3 Document Scope

This document covers the Hanford Cross-Site Transfer System operator interface application. This software runs on the OIT computers in the control room located in the 242-S building in 200-W area.

4 Cross-Site Transfer System OIT Documentation

4.1 System Description

The Cross-Site Transfer Control System, as described in the general system document, is made up of several controllers that provide independent control in a coordinated fashion. The OIT portion of the system provides a window into the operation of the controls transferring waste between the 200-West and 200-East areas. This includes transfer status, valve positions, pump status, and alarm indication. Another part of this process window is operator entry including acknowledging alarms, selecting the transfer mode, requesting valve position changes, and starting or stopping pumps. However, the OIT does not provide any of the actual control. This is provided by the Process Control Unit PLCs and is described and documented in the PLC documentation.

The OIT consists of two Pentium PC Operator Interface Machines running RSView32 operator interface software. These stations are connected together with a local Ethernet link to facilitate file transfers. For control purposes, the OIT applications communicate with each other and the PLCs over Allen-Bradley's Data Highway Plus protocol. The normal DH+ cabling, called Blue Hose (Belden # 9463 blue insulated

twinaxial cable), is used for the OCS leg of the DH+ network, connecting the OIT computers to PCU-1. All of the PLC processors from PCU-1 on use full duplex fiber optic cable for the DH+ network. In the future the fiber optic cable could be extended to the operator control station.

The PLC control system is designed to continue operating even if the RSView32 Operator Interface system is shut down or disconnected. However, since the OIT provides the operators with a window into what is happening during a transfer this is not a desired mode of operation. The two computers that make up the Operator Interface system, as mentioned above, function independently with each computer running the same application and communicating directly with all of the PLCs. This design provides flexibility by allowing the operators to view two different portions of the process at the same time. It also enables the operator to view any portion of the process even if one of the computers is down.

To keep the same RSView32 application on both computers any changes will be made to one computer and then copied to the other. Normally the changes are made on the Maintenance station, although this is not required. When copying the application from one computer to the other only the alarm configuration for audible annunciation and printing messages require editing the application. These functions are performed by the Operations computer and not the Maintenance computer. The system document describes the steps for making these changes. Any other differences are handled automatically by the RSView32 application. It detects the name of the computer where it is running and adjusts visibility or enabling for selected components. None of the normal operator functions are conditional except for the alarm horn silence, since the audible alarm annunciation is only configured on the Operations computer.

4.2 Operator Interface and Document Changes

The Project Documenter utility was not available when the system and original documentation were developed, therefore, this document incorporates various changes that have been made under several ECNs through the life of the system. These changes have included adjustments needed for running under Windows NT instead of 95, communications improvements, and enhancements to the application's ability to detect the station name and automatically adjust its functionality. In addition, the tag database and communications checking and indication were updated based on PLC changes made under ECN-720626 R. 0. This OIT ECN also incorporates a few changes requested by operations. First, visibility control was added to the flow indicator display on the SY-101 tank screen. This indicator will be hidden when SY-102 is in recirculation. The flow meter would otherwise display reverse (negative) flow to the minimum limit of the transducer and then the signal is clamped. Next, the PCU-4 Lift Station screen was changed to show a different destination tank for Supernate transfers. Finally, the Supernate line rupture disk alarm type was changed from ON to OFF, matching the description and controls in the PCU-4 PLC code. Lastely, with the removal of the 244-A lift station from the transfer route and the addition of a new continuous leak detector cable section, the system was updated via ECN-723359R0.

5 Control System Alarm Configuration

5.1 Operator Interface User's Manual Alarm Overview

As stated above, the two OIT computers run the same application with the exception of the Alarm Severities Configuration where the alarm horn and printer are configured. The Project Documentor listing included in Appendix A is actually the Maintenance Station configuration. To show the configuration differences, the unique configurations for the Maintenance and Operations stations are shown below. Section 5.1.1 shows the alarm severities configuration window from RSView32 while the actual Maintenance and Operations alarm severities configurations from the Project Documentor utility are shown in the tables in section 5.1.2.

5.1.1 RSView32 Alarm Severities Configuration Window

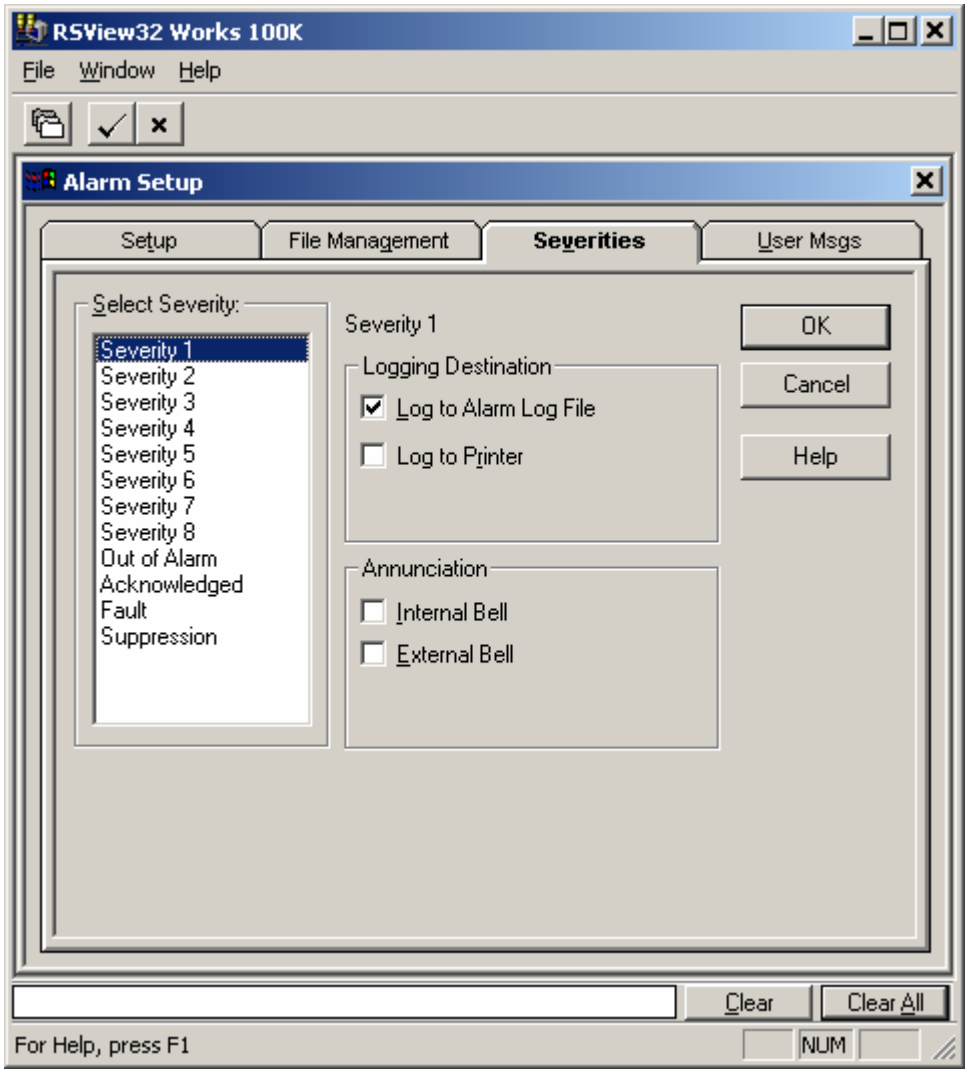

5.1.2 RSView32 Alarm Configurations from the Project Documentor

5.1.2.1 Maintenance Station Alarm Severities

Severity	Log to File	Log to Printer	Internal Bell	External Bell
Severity 1	X			
Severity 2	X			
Severity 3	X			
Severity 4	X			
Severity 5	X			
Severity 6	X			
Severity 7	X			
Severity 8	X			
Out of Alarm	X			
Acknowledged	X			
Fault	X			
Suppression	X			

5.1.2.2 Operations Station Alarm Severities

Severity	Log to File	Log to Printer	Internal Bell	External Bell
Severity 1	X	X	X	
Severity 2	X	X	X	
Severity 3	X	X	X	
Severity 4	X	X	X	
Severity 5	X	X	X	
Severity 6	X	X	X	
Severity 7	X	X	X	
Severity 8	X	X	X	
Out of Alarm	X	X		
Acknowledged	X			
Fault	X			
Suppression	X			

APPENDIX A RSView32 Project Documentor Listing

CROSSITE
PROJECT DOCUMENTATION
February 05, 2007

TABLE OF CONTENTS

1 SYSTEM . . . 3
1.1 System\Channel . . . 3
1.2 System\Node . . . 3
1.3 System\Scan Class . . . 3
1.4 System\Tag Database . . . 3
1.4.1 System\Tag Database\Tag Cross Reference . . . 3
1.4.2 System\Tag Database\Tag List . . . 51
1.4.3 System\Tag Database\Alarmed Tag List . . . 115
1.4.4 System\Tag Database\Unused Tag List . . . 138
1.5 System\Tag Monitor . . . 143
1.5.1 System\Tag Monitor\HeartBeat . . . 143
1.6 System\User Accounts . . . 143
1.7 System\Security Codes . . . 144
1.8 System\Activity Log Setup . . . 144
1.9 System\Startup . . . 144

2 GRAPHICS . . . 146
2.1 Graphics\ActiveX Control Setup . . . 146
2.2 Graphics\Display . . . 146
2.2.1 Graphics\Display\00Entry . . . 147
2.2.2 Graphics\Display\00error . . . 150
2.2.3 Graphics\Display\00mode . . . 151
2.2.4 Graphics\Display\01overvw . . . 154
2.2.5 Graphics\Display\02help . . . 160
2.2.6 Graphics\Display\03almsmc . . . 162
2.2.7 Graphics\Display\03almsmv . . . 164
2.2.8 Graphics\Display\04divbox . . . 166
2.2.9 Graphics\Display\05p3125a . . . 172
2.2.10 Graphics\Display\06p3125b . . . 176
2.2.11 Graphics\Display\07draina . . . 180
2.2.12 Graphics\Display\08drainb . . . 183
2.2.13 Graphics\Display\09ventsn . . . 186
2.2.14 Graphics\Display\10liftsn . . . 190
2.2.15 Graphics\Display\11sy101 . . . 193
2.2.16 Graphics\Display\12sy102 . . . 197
2.2.17 Graphics\Display\13flush . . . 200
2.2.18 Graphics\Display\Caustic . . . 203
2.2.19 Graphics\Display\Entry . . . 204
2.2.20 Graphics\Display\Mov-2p-d . . . 205
2.2.21 Graphics\Display\Mov-2pos . . . 207
2.2.22 Graphics\Display\Mov-3pos . . . 209
2.2.23 Graphics\Display\Pb_ack . . . 211
2.2.24 Graphics\Display\Pmp3100a . . . 212
2.2.25 Graphics\Display\Pmp350pid . . . 214
2.2.26 Graphics\Display\Sov-2pos . . . 217
2.2.27 Graphics\Display\Test . . . 219
2.3 Graphics\Parameters . . . 223
2.3.1 Graphics\Parameters\M3125aa . . . 223
2.3.2 Graphics\Parameters\M3125ab . . . 223
2.3.3 Graphics\Parameters\M3125ac . . . 223
2.3.4 Graphics\Parameters\M3125ad . . . 224
2.3.5 Graphics\Parameters\M3125ae . . . 224
2.3.6 Graphics\Parameters\M3125af . . . 225
2.3.7 Graphics\Parameters\M3125ag . . . 225
2.3.8 Graphics\Parameters\M3125ah . . . 226
2.3.9 Graphics\Parameters\M3125aj . . . 226
2.3.10 Graphics\Parameters\M3125ak . . . 227
2.3.11 Graphics\Parameters\M3125ba . . . 227
2.3.12 Graphics\Parameters\M3125bb . . . 228
2.3.13 Graphics\Parameters\M3125bc . . . 228
2.3.14 Graphics\Parameters\M3125bd . . . 228
2.3.15 Graphics\Parameters\M3125be . . . 229
2.3.16 Graphics\Parameters\M3125bf . . . 229
2.3.17 Graphics\Parameters\M3125bg . . . 230

2.3.18 Graphics\Parameters\M3125bh . . . 230
2.3.19 Graphics\Parameters\M3125bj . . . 231
2.3.20 Graphics\Parameters\M3125bk . . . 231
2.3.21 Graphics\Parameters\M3156a . . . 232
2.3.22 Graphics\Parameters\M3156b . . . 232
2.3.23 Graphics\Parameters\M843 . . . 233
2.3.24 Graphics\Parameters\M844 . . . 233
2.3.25 Graphics\Parameters\M845 . . . 234
2.3.26 Graphics\Parameters\M846 . . . 234
2.3.27 Graphics\Parameters\S3125c . . . 234
2.3.28 Graphics\Parameters\S3125d . . . 235
2.3.29 Graphics\Parameters\S3125e . . . 235
2.3.30 Graphics\Parameters\S3125g . . . 236
2.3.31 Graphics\Parameters\S3163 . . . 237
2.3.32 Graphics\Parameters\S3165a . . . 237
2.3.33 Graphics\Parameters\S3165b . . . 238
2.3.34 Graphics\Parameters\S3166a . . . 238
2.3.35 Graphics\Parameters\S3166b . . . 239
2.3.36 Graphics\Parameters\S3167a . . . 239
2.3.37 Graphics\Parameters\S3167b . . . 240
2.3.38 Graphics\Parameters\S3168a . . . 240
2.3.39 Graphics\Parameters\S3168b . . . 241
2.3.40 Graphics\Parameters\S3173a . . . 241
2.3.41 Graphics\Parameters\S3173b . . . 242
2.3.42 Graphics\Parameters\S3182a . . . 243
2.3.43 Graphics\Parameters\S3182b . . . 243
2.3.44 Graphics\Parameters\S3183a . . . 244
2.3.45 Graphics\Parameters\S3183b . . . 244
2.3.46 Graphics\Parameters\S3184 . . . 245
2.3.47 Graphics\Parameters\S3185a . . . 245
2.3.48 Graphics\Parameters\S3185b . . . 246
2.4 Graphics\Recipe . . . 246

3 ALARMS . . . 247
3.1 Alarms\Alarm Setup . . . 247
3.2 Alarms\Alarm Summary . . . 247

4 DATA LOG . . . 248
4.1 Data Log\Data Log Setup . . . 248
4.1.1 Data Log\Data Log Setup\Cross Site . . . 248
4.1.2 Data Log\Data Log Setup\Dlg_test . . . 248
4.1.3 Data Log\Data Log Setup\Dlg_tst0 . . . 249
4.1.4 Data Log\Data Log Setup\Dlg_tst1 . . . 250
4.1.5 Data Log\Data Log Setup\P3125 . . . 251
4.1.6 Data Log\Data Log Setup\R_Transf . . . 251
4.1.7 Data Log\Data Log Setup\Spd_Test . . . 252

5 LOGIC AND CONTROL . . . 254
5.1 Logic and Control\Derived Tags . . . 254
5.1.1 Logic and Control\Derived Tags\Comm_Check . . . 254
5.1.2 Logic and Control\Derived Tags\Comm_Reset . . . 254
5.1.3 Logic and Control\Derived Tags\Global . . . 255
5.1.4 Logic and Control\Derived Tags\Mt_hb . . . 256
5.1.5 Logic and Control\Derived Tags\Op_hb . . . 257
5.2 Logic and Control\Events . . . 258
5.2.1 Logic and Control\Events\Mt_hb . . . 258
5.2.2 Logic and Control\Events\System . . . 259
5.3 Logic and Control\Macro . . . 260
5.3.1 Logic and Control\Macro\Alm_Suppress . . . 260
5.3.2 Logic and Control\Macro\Dsp_load . . . 261
5.3.3 Logic and Control\Macro\Engr_strt . . . 261
5.3.4 Logic and Control\Macro\Mt_strt . . . 261
5.3.5 Logic and Control\Macro\Op_strt . . . 262
5.3.6 Logic and Control\Macro\StartMac . . . 262
5.3.7 Logic and Control\Macro\StopMac . . . 263
5.4 Logic and Control\Global Keys . . . 263
5.4.1 Logic and Control\Global Keys\Glk_lev0 . . . 263
5.4.2 Logic and Control\Global Keys\Glk_lev1 . . . 264

CROSSITE
PROJECT DOCUMENTATION
February 05, 2007

1 SYSTEM

1.1 System\Channel

Channel	Network Type	Primary Driver	Secondary Driver	Active Driver	Messages
1					
2					
3					
4					

1.2 System\Node

	Node Name	Data Source	Device	Channel	Station or Server	Timeout	Enabled
1	PCU-1	OPC Server	Server Type: In Process	Access Path: PLC1	RSLinx OPC Server	Update Rate: 1.000000	Yes
2	PCU-2	OPC Server	Server Type: In Process	Access Path: PLC2	RSLinx OPC Server	Update Rate: 1.000000	Yes
3	PCU-3	OPC Server	Server Type: In Process	Access Path: PLC3	RSLinx OPC Server	Update Rate: 1.000000	Yes
4	PCU-4	OPC Server	Server Type: In Process	Access Path: PLC4	RSLinx OPC Server	Update Rate: 1.000000	Yes
5	PCU-5	OPC Server	Server Type: In Process	Access Path: PLC5	RSLinx OPC Server	Update Rate: 1.000000	Yes

1.3 System\Scan Class

Scan Class Name	Foreground Period (sec)	Background Period (sec)
A	1.000	5.000
B	0.000	0.500
C	1.000	5.000
D	1.000	5.000
E	1.000	5.000
F	1.000	5.000
G	1.000	5.000
H	1.000	5.000
I	1.000	5.000
J	1.000	5.000
K	1.000	5.000

1.4 System\Tag Database

1.4.1 System\Tag Database\Tag Cross Reference

Number of IO Tags = 1088, Total Number of Tags = 1229

Tag Name	Tag Type	Tag Description	Component Type	Component Name	Component Description
COMPUTER_NAME	String	COMPUTER NAME READ FROM THE RSVIEW OBJECT MODEL	Display	00error	HANFORD CROSS SITE TRANSFER SYSTEM
			Display	00mode	HANFORD CROSS SITE TRANSFER SYSTEM - WELCOME AND TRANSFER MODE SELECTION SCREEN
			Display	01overvw	HANFORD CROSS SITE TRANSFER SYSTEM - SYSTEM OVERVIEW DIAGRAM
			Events	System	Event file
MAINTENANCE_STATION	Digital	OIT STATION SELECTION - TRUE=MAINTENANCE, FALSE=OPERATOR	Display	00Entry	TEST ENTRY
			Display	00mode	HANFORD CROSS SITE TRANSFER SYSTEM - WELCOME AND TRANSFER MODE SELECTION SCREEN
			Display	01overvw	HANFORD CROSS SITE TRANSFER SYSTEM - SYSTEM OVERVIEW DIAGRAM
			Display	02help	HANFORD CROSS SITE TRANSFER SYSTEM - HELP PAGE

Tag Name	Tag Type	Tag Description	Component Type	Component Name	Component Description
			Display	03almsmc	HANFORD CROSS SITE TRANSFER SYSTEM - ALARM SUMMARY DISPLAY
			Display	03almsmv	HANFORD CROSS SITE TRANSFER SYSTEM - ALARM SUMMARY DISPLAY
			Display	04divbox	HANFORD CROSS SITE TRANSFER SYSTEM - PCU-2 - DIVERSION BOX 6241-A
			Display	05p3125a	HANFORD CROSS SITE TRANSFER SYSTEM - PCU-2 - BOOSTER PUMP P-3125A
			Display	06p3125b	HANFORD CROSS SITE TRANSFER SYSTEM - PCU-2 - BOOSTER PUMP P-3125B
			Display	07draina	HANFORD CROSS SITE TRANSFER SYSTEM - PCU-2 - BOOSTER PUMP P-3125A - DRAIN VALVES
			Display	08drainb	HANFORD CROSS SITE TRANSFER SYSTEM - PCU-2 - BOOSTER PUMP P-3125B - DRAIN VALVES
			Display	09ventsn	HANFORD CROSS SITE TRANSFER SYSTEM - PCU-3 - VENT STATION 6241-V
			Display	10liftsn	HANFORD CROSS SITE TRANSFER SYSTEM - PCU-4 - 244A LIFT STATION
			Display	11sy101	HANFORD CROSS SITE TRANSFER SYSTEM - PCU-1 - TRANSFER PUMP FROM SY-101
			Display	12sy102	HANFORD CROSS SITE TRANSFER SYSTEM - PCU-1 - TRANSFER PUMP FROM SY-102
			Display	13flush	HANFORD CROSS SITE TRANSFER SYSTEM - PCU-1 - FLUSH SYSTEM
			Display	Test	HANFORD CROSS SITE TRANSFER SYSTEM - TEST AND DEMONSTRATION DISPLAY
			Events	System	Event file
			Macro	Engr_strt	
			Macro	Mt_strt	
			Macro	Op_strt	
PB_INDICATOR	Analog	VALUE INDICATING THE PUSHBUTTON BEING ACKNOWLEDGED	Display	01overvw	HANFORD CROSS SITE TRANSFER SYSTEM - SYSTEM OVERVIEW DIAGRAM
			Display	05p3125a	HANFORD CROSS SITE TRANSFER SYSTEM - PCU-2 - BOOSTER PUMP P-3125A
			Display	06p3125b	HANFORD CROSS SITE TRANSFER SYSTEM - PCU-2 - BOOSTER PUMP P-3125B
			Display	10liftsn	HANFORD CROSS SITE TRANSFER SYSTEM - PCU-4 - 244A LIFT STATION
			Display	11sy101	HANFORD CROSS SITE TRANSFER SYSTEM - PCU-1 - TRANSFER PUMP FROM SY-101
			Display	12sy102	HANFORD CROSS SITE TRANSFER SYSTEM - PCU-1 - TRANSFER PUMP FROM SY-102
			Display	13flush	HANFORD CROSS SITE TRANSFER SYSTEM - PCU-1 - FLUSH SYSTEM
			Display	Caustic	Caustic Ratio Entry Pop-Up
			Display	Entry	Analog Entry Pop-Up
			Display	Mov-2p-d	Two Position Motor Operated Drain Valve Pop-Up
			Display	Mov-2pos	Two Position Motor Operated Valve Pop-Up
			Display	Mov-3pos	Three Position Motor Operated Valve Pop-Up
			Display	Pb_ack	Pushbutton Acknowledge
			Display	Pmp3100a	Flush Pump Popup
			Display	Pmp350pid	Transfer Pump Popup
			Display	Sov-2pos	Two Position Solenoid Valve Pop-Up
			Macro	Dsp_load	
PCU-1\0_OFF	Digital	ALWAYS OFF PLACE HOLDER FOR PCU-1 VARIABLES	Display	02help	HANFORD CROSS SITE TRANSFER SYSTEM - HELP PAGE
PCU-1\200W-SD2	Digital	INPUT SIGNAL TO 200-W MASTER SHUTDOWN Y-72.1			
PCU-1\BATT_BAD_PLC1	Digital	PLC-1 BATTERY IS BAD OR MISSING	Tag Monitor	HeartBeat	
			Display	00Entry	TEST ENTRY
			Display	01overvw	HANFORD CROSS SITE TRANSFER SYSTEM - SYSTEM OVERVIEW DIAGRAM
			Alarm Subsystem	Alarmed Tag	

Tag Name	Tag Type	Tag Description	Component Type	Component Name	Component Description
PCU-1\BATT_BAD_PLC1_ACK	Digital	PLC-1 BATTERY IS BAD OR MISSING ACKNOWLEDGE	Alarm Acknowledge Bit Tag	PCU-1\BATT_BAD_PLC1	
PCU-1\COM-1_OCS	Digital	COMMUN. WITH OCS IGNORED	Tag Monitor	HeartBeat	
			Display	01overvw	HANFORD CROSS SITE TRANSFER SYSTEM - SYSTEM OVERVIEW DIAGRAM
			Macro	Alm_Suppress	
			Alarm Subsystem	Alarmed Tag	
PCU-1\COM-1_OCS_ACK	Digital	COMMUN. WITH OCS IGNORED ACKNOWLEDGE	Alarm Acknowledge Bit Tag	PCU-1\COM-1_OCS	
PCU-1\COM-12	Digital	COMMUN. WITH PCU-2 IGNORED	Display	00Entry	TEST ENTRY
			Display	01overvw	HANFORD CROSS SITE TRANSFER SYSTEM - SYSTEM OVERVIEW DIAGRAM
			Alarm Subsystem	Alarmed Tag	
PCU-1\COM-12_ACK	Digital	COMMUN. WITH PCU-2 IGNORED ACKNOWLEDGE	Alarm Acknowledge Bit Tag	PCU-1\COM-12	
PCU-1\COM-13	Digital	COMMUN. WITH PCU-3 IGNORED	Display	01overvw	HANFORD CROSS SITE TRANSFER SYSTEM - SYSTEM OVERVIEW DIAGRAM
			Alarm Subsystem	Alarmed Tag	
PCU-1\COM-13_ACK	Digital	COMMUN. WITH PCU-3 IGNORED ACKNOWLEDGE	Alarm Acknowledge Bit Tag	PCU-1\COM-13	
PCU-1\COM-14	Digital	COMMUN. WITH PCU-4 IGNORED	Display	01overvw	HANFORD CROSS SITE TRANSFER SYSTEM - SYSTEM OVERVIEW DIAGRAM
			Alarm Subsystem	Alarmed Tag	
PCU-1\COM-14_ACK	Digital	COMMUN. WITH PCU-4 IGNORED ACKNOWLEDGE	Alarm Acknowledge Bit Tag	PCU-1\COM-14	
PCU-1\COM-15	Digital	COMMUN. WITH PCU-5 IGNORED	Display	01overvw	HANFORD CROSS SITE TRANSFER SYSTEM - SYSTEM OVERVIEW DIAGRAM
			Alarm Subsystem	Alarmed Tag	
PCU-1\COM-15_ACK	Digital	COMMUN. WITH PCU-5 IGNORED ACKNOWLEDGE	Alarm Acknowledge Bit Tag	PCU-1\COM-15	
PCU-1\COM-OCS_1	Digital	COMMUN. WITH PCU-1 IGNORED - DETECTED AT OCS	Display	00Entry	TEST ENTRY
			Display	01overvw	HANFORD CROSS SITE TRANSFER SYSTEM - SYSTEM OVERVIEW DIAGRAM
			Events	Mt_hb	Communications Heart Beat Event file
			Events	System	Event file
			Alarm Subsystem	Alarmed Tag	
PCU-1\COM-OCS_1_ACK	Digital	COMMUN. WITH PCU-1 IGNORED - DETECTED AT OCS ACKNOWLEDGE	Alarm Acknowledge Bit Tag	PCU-1\COM-OCS_1	
PCU-1\COM_OCS_1_MNT	Digital	Communiations failure with the PLC detected in this OIT	Derived Tags	Mt_hb	Derived Tag file
			Alarm Subsystem	Alarmed Tag	
PCU-1\COM_OCS_1_OPR	Digital	Communiations failure with the PLC detected in this OIT	Derived Tags	Op_hb	Derived Tag file
			Alarm Subsystem	Alarmed Tag	
PCU-1\COM_SPD_TST	Analog	COMMUNICATIONS TEST REGISTER TO OIT	Data Log Setup	Spd_Test	
PCU-1\FAL-P3100A	Digital	FLUSH PUMP P-3100A LOW FLOW Y-90.1	Display	01overvw	HANFORD CROSS SITE TRANSFER SYSTEM - SYSTEM OVERVIEW DIAGRAM
			Display	13flush	HANFORD CROSS SITE TRANSFER SYSTEM - PCU-1 - FLUSH SYSTEM
			Display	Pmp3100a	Flush Pump Popup
			Alarm Subsystem	Alarmed Tag	
PCU-1\FAL-P3100A_ACK	Digital	FLUSH PUMP P-3100A LOW FLOW Y-90.1 ACKNOWLEDGE	Alarm Acknowledge Bit Tag	PCU-1\FAL-P3100A	
PCU-1\FI-302C-1	Analog	FLUSH PUMP P-3100A OUTLET FLOW	Display	13flush	HANFORD CROSS SITE TRANSFER SYSTEM - PCU-1 - FLUSH SYSTEM
			Data Log Setup	Cross Site	
			Data Log Setup	Dlg_test	
			Data Log Setup	Dlg_tst0	
			Data Log Setup	Dlg_tst1	
PCU-1\FI-302C-1_A	Digital	PCU-1 INPUT ANALOG OVER OR UNDER RANGE ALARM	Display	13flush	HANFORD CROSS SITE TRANSFER SYSTEM - PCU-1 - FLUSH SYSTEM
			Data Log Setup	Dlg_test	
			Data Log Setup	Dlg_tst0	
			Alarm Subsystem	Alarmed Tag	
PCU-1\FI-302C-1_A_ACK	Digital	PCU-1 INPUT ANALOG OVER OR UNDER RANGE ALARM ACKNOWLEDGE	Alarm Acknowledge Bit Tag	PCU-1\FI-302C-1_A	

Tag Name	Tag Type	Tag Description	Component Type	Component Name	Component Description
PCU-1\FI-367A	Analog	SY-101-WT-P-350 TRANSFER PUMP DISCHARGE FLOW	Display	11sy101	HANFORD CROSS SITE TRANSFER SYSTEM - PCU-1 - TRANSFER PUMP FROM SY-101
			Display	Pmp350pid	Transfer Pump Popup
PCU-1\FI-367A_A	Digital	PCU-1 INPUT ANALOG OVER OR UNDER RANGE ALARM	Alarm Subsystem	Alarmed Tag	
PCU-1\FI-367A_A_ACK	Digital	PCU-1 INPUT ANALOG OVER OR UNDER RANGE ALARM ACKNOWLEDGE	Alarm Acknowledge Bit Tag	PCU-1\FI-367A_A	
PCU-1\FIC-302C-2	Analog	INLET FLOW TO TANK TK-302-C LINE 4	Display	13flush	HANFORD CROSS SITE TRANSFER SYSTEM - PCU-1 - FLUSH SYSTEM
			Data Log Setup	Cross Site	
			Data Log Setup	Dlg_test	
			Data Log Setup	Dlg_tst0	
			Data Log Setup	Dlg_tst1	
PCU-1\FIC-302C-2_A	Digital	PCU-1 INPUT ANALOG OVER OR UNDER RANGE ALARM	Display	13flush	HANFORD CROSS SITE TRANSFER SYSTEM - PCU-1 - FLUSH SYSTEM
			Data Log Setup	Dlg_test	
			Data Log Setup	Dlg_tst0	
			Alarm Subsystem	Alarmed Tag	
PCU-1\FIC-302C-2_A_ACK	Digital	PCU-1 INPUT ANALOG OVER OR UNDER RANGE ALARM ACKNOWLEDGE	Alarm Acknowledge Bit Tag	PCU-1\FIC-302C-2_A	
PCU-1\FIC-302C-2A	Analog	FLOW CONTROL CHEM ADD PUMP P-3100B			
PCU-1\FIC-3101-E	Analog	PUMP SY-101-WT-P-350 OUTLET FLOW DRIVE SPEED LOOP ERROR			
PCU-1\FIC-3101-O	Analog	PUMP SY-101-WT-P-350 OUTLET FLOW/ DRIVE SPEED REF OUTPUT	Display	11sy101	HANFORD CROSS SITE TRANSFER SYSTEM - PCU-1 - TRANSFER PUMP FROM SY-101
PCU-1\FIQ-302C-2H	Analog	TOTALIZED INLET FLOW TO TANK TK-302-C HIGH PART	Display	13flush	HANFORD CROSS SITE TRANSFER SYSTEM - PCU-1 - FLUSH SYSTEM
			Data Log Setup	R_Transf	
PCU-1\FIQ-302C-2L	Analog	TOTALIZED INLET FLOW TO TANK TK-302-C LOW PART	Display	13flush	HANFORD CROSS SITE TRANSFER SYSTEM - PCU-1 - FLUSH SYSTEM
			Data Log Setup	R_Transf	
PCU-1\FR-302C-2	Analog	CHEMICAL ADD PUMP P-3100B TO TANK TK-302-C % OF INLET FLOW REF FROM OIT	Display	Caustic	Caustic Ratio Entry Pop-Up
PCU-1\HB_COMM_CNT	Analog	Communications checking counter	Tag Monitor	HeartBeat	
			Derived Tags	Comm_Check	Derived Tag file
PCU-1\HB_COMM_OK	Digital	Communications from PLC currently OK	Tag Monitor	HeartBeat	
			Derived Tags	Comm_Check	Derived Tag file
			Derived Tags	Mt_hb	Derived Tag file
			Derived Tags	Op_hb	Derived Tag file
PCU-1\HB_COMM_TIME	Analog	ACCUMULATED TIME FOR THE COMMUNICATION CHECK HEART-BEAT	Events	Mt_hb	Communications Heart Beat Event file
PCU-1\HB_OCS_PLC1	Digital	HEARTBEAT FROM OCS TO PLC-1	Tag Monitor	HeartBeat	
			Events	Mt_hb	Communications Heart Beat Event file
			Events	System	Event file
PCU-1\HB_OCS_PLC1_MNT	Analog	COMMUN. HEARTBEAT REGISTER FROM MAINTENANCE OIT TO PCU-1	Derived Tags	Mt_hb	Derived Tag file
PCU-1\HB_OCS_PLC1_OPR	Analog	COMMUN. HEARTBEAT REGISTER FROM OPERATIONS OIT TO PCU-1	Derived Tags	Op_hb	Derived Tag file
PCU-1\HB_PLC1_OCS	Digital	HEARTBEAT FROM PLC-1 TO OCS	Tag Monitor	HeartBeat	
			Events	Mt_hb	Communications Heart Beat Event file
			Events	System	Event file
PCU-1\HB_PLC1_OCS_BOTH	Analog	COMMUN. HEARTBEAT REGISTER FROM PCU-1 TO BOTH OPERATOR TERMINALS	Tag Monitor	HeartBeat	
			Derived Tags	Comm_Check	Derived Tag file
			Derived Tags	Comm_Reset	Derived Tag file
PCU-1\HB_REF	Analog	Communications heartbeat reference register	Tag Monitor	HeartBeat	
			Derived Tags	Comm_Check	Derived Tag file
			Derived Tags	Comm_Reset	Derived Tag file
PCU-1\HS-058W	Digital	OVERRIDE OF 200-W MASTER SHUTDOWN Y-77.1			
PCU-1\HS-302C-2R	Digital	ACCUMULATED INLET FLOW TO TANK TK-302-C RESET			
PCU-1\HS-3100A1	Digital	START FLUSH PUMP P-3100A Y-90.1			
PCU-1\HS-3100A2	Digital	STOP FLUSH PUMP P-3100A Y-90.1			

Tag Name	Tag Type	Tag Description	Component Type	Component Name	Component Description
PCU-1\HS-3101-M	Digital	PID FOR PUMP SY-101-WT-P-350 MANUAL MODE	Display	11sy101	HANFORD CROSS SITE TRANSFER SYSTEM - PCU-1 - TRANSFER PUMP FROM SY-101
			Display	Pmp350pid	Transfer Pump Popup
PCU-1\HS-3101A	Digital	START TRANSFER PUMP SY-101-WT-P-350			
PCU-1\HS-3101B	Digital	STOP TRANSFER PUMP SY-101-WT-P-350			
PCU-1\HS-3101C	Digital	TRANSFER PUMP SY-101-WT-P-350 RECIRCULATION	Display	11sy101	HANFORD CROSS SITE TRANSFER SYSTEM - PCU-1 - TRANSFER PUMP FROM SY-101
PCU-1\HS-3101D	Digital	ENABLE SY-101-WT-P-350 PUMP	Display	11sy101	HANFORD CROSS SITE TRANSFER SYSTEM - PCU-1 - TRANSFER PUMP FROM SY-101
PCU-1\HS-3102A	Digital	START TRANSFER PUMP P-102-SY-02A Y75			
PCU-1\HS-3102B	Digital	STOP TRANSFER PUMP P-102-SY-02A Y75			
PCU-1\HS-3102C	Digital	TRANSFER PUMP P-102-SY-02A RECIRCULATION Y-75.1	Display	12sy102	HANFORD CROSS SITE TRANSFER SYSTEM - PCU-1 - TRANSFER PUMP FROM SY-102
PCU-1\IAH-350	Digital	SY-101-WT-P-350 TRANSFER PUMP HIGH CURRENT ALARM	Alarm Subsystem	Alarmed Tag	
PCU-1\IAH-350_ACK	Digital	SY-101-WT-P-350 TRANSFER PUMP HIGH CURRENT ALARM ACKNOWLEDGE	Alarm Acknowledge Bit Tag	PCU-1\IAH-350	
PCU-1\II-3102	Analog	PUMP P-102-SY-02A CURRENT	Display	12sy102	HANFORD CROSS SITE TRANSFER SYSTEM - PCU-1 - TRANSFER PUMP FROM SY-102
			Data Log Setup	Cross Site	
			Data Log Setup	Dlg_test	
			Data Log Setup	Dlg_tst0	
			Data Log Setup	Dlg_tst1	
PCU-1\II-3102_A	Digital	PCU-1 INPUT ANALOG OVER OR UNDER RANGE ALARM	Display	11sy101	HANFORD CROSS SITE TRANSFER SYSTEM - PCU-1 - TRANSFER PUMP FROM SY-101
			Display	12sy102	HANFORD CROSS SITE TRANSFER SYSTEM - PCU-1 - TRANSFER PUMP FROM SY-102
			Data Log Setup	Dlg_test	
			Data Log Setup	Dlg_tst0	
			Alarm Subsystem	Alarmed Tag	
PCU-1\II-3102_A_ACK	Digital	PCU-1 INPUT ANALOG OVER OR UNDER RANGE ALARM ACKNOWLEDGE	Alarm Acknowledge Bit Tag	PCU-1\II-3102_A	
PCU-1\II-350	Analog	SY-101-WT-P-350 TRANSFER PUMP CURRENT	Display	11sy101	HANFORD CROSS SITE TRANSFER SYSTEM - PCU-1 - TRANSFER PUMP FROM SY-101
PCU-1\II-350_A	Digital	PCU-1 INPUT ANALOG OVER OR UNDER RANGE ALARM	Alarm Subsystem	Alarmed Tag	
PCU-1\II-350_A_ACK	Digital	PCU-1 INPUT ANALOG OVER OR UNDER RANGE ALARM ACKNOWLEDGE	Alarm Acknowledge Bit Tag	PCU-1\II-350_A	
PCU-1\K-LA-365	Digital	TRANSFER PUMP SY-101 PUMP PACKAGE LEAK ALARM	Alarm Subsystem	Alarmed Tag	
PCU-1\K-LA-365_ACK	Digital	TRANSFER PUPMP SY-101-WT-P-350 PUMP LEAK ALARM ACKNOWLEDGE	Alarm Acknowledge Bit Tag	PCU-1\K-LA-365	
PCU-1\LAL-302C1	Digital	TANK TK-302C-1 LEVEL BIT Y-90.1	Display	13flush	HANFORD CROSS SITE TRANSFER SYSTEM - PCU-1 - FLUSH SYSTEM
			Display	Pmp3100a	Flush Pump Popup
			Alarm Subsystem	Alarmed Tag	
PCU-1\LAL-302C1_ACK	Digital	TANK TK-302C-1 LEVEL BIT Y-90.1 ACKNOWLEDGE	Alarm Acknowledge Bit Tag	PCU-1\LAL-302C1	
PCU-1\LAL-3101	Digital	TANK 241-SY-101 LOW LEVEL	Display	01overvw	HANFORD CROSS SITE TRANSFER SYSTEM - SYSTEM OVERVIEW DIAGRAM
			Alarm Subsystem	Alarmed Tag	
PCU-1\LAL-3101_ACK	Digital	TANK 241-SY101 LOW LEVEL ACKNOWLEDGE	Alarm Acknowledge Bit Tag	PCU-1\LAL-3101	
PCU-1\LAL-3102	Digital	TANK 241-SY-102 LOW LEVEL	Display	01overvw	HANFORD CROSS SITE TRANSFER SYSTEM - SYSTEM OVERVIEW DIAGRAM
			Display	11sy101	HANFORD CROSS SITE TRANSFER SYSTEM - PCU-1 - TRANSFER PUMP FROM SY-101
			Display	12sy102	HANFORD CROSS SITE TRANSFER SYSTEM - PCU-1 - TRANSFER PUMP FROM SY-102
			Alarm Subsystem	Alarmed Tag	
PCU-1\LAL-3102_ACK	Digital	TANK 241-SY-102 LOW LEVEL ACKNOWLEDGE	Alarm Acknowledge Bit Tag	PCU-1\LAL-3102	
PCU-1\LI-302C-1	Analog	TANK TK-302-C LEVEL	Display	13flush	HANFORD CROSS SITE TRANSFER SYSTEM - PCU-1 - FLUSH SYSTEM
			Data Log Setup	Dlg_test	

Tag Name	Tag Type	Tag Description	Component Type	Component Name	Component Description
			Data Log Setup	Dlg_tst0	
			Data Log Setup	Dlg_tst1	
PCU-1\LI-302C-1_A	Digital	PCU-1 INPUT ANALOG OVER OR UNDER RANGE ALARM	Display	13flush	HANFORD CROSS SITE TRANSFER SYSTEM - PCU-1 - FLUSH SYSTEM
			Data Log Setup	Dlg_test	
			Data Log Setup	Dlg_tst0	
			Alarm Subsystem	Alarmed Tag	
PCU-1\LI-302C-1_A_ACK	Digital	PCU-1 INPUT ANALOG OVER OR UNDER RANGE ALARM ACKNOWLEDGE	Alarm Acknowledge Bit Tag	PCU-1\LI-302C-1_A	
PCU-1\LI-3101	Analog	241-SY-101 TANK LEVEL INDICATION	Display	11sy101	HANFORD CROSS SITE TRANSFER SYSTEM - PCU-1 - TRANSFER PUMP FROM SY-101
PCU-1\LI-3101_A	Digital	PCU-1 INPUT ANALOG OVER OR UNDER RANGE ALARM	Alarm Subsystem	Alarmed Tag	
PCU-1\LI-3101_A_ACK	Digital	PCU-1 INPUT ANALOG OVER OR UNDER RANGE ALARM ACKNOWLEDGE	Alarm Acknowledge Bit Tag	PCU-1\LI-3101_A	
PCU-1\LI-3102	Analog	241-SY-102 TANK LEVEL INDICATION	Display	12sy102	HANFORD CROSS SITE TRANSFER SYSTEM - PCU-1 - TRANSFER PUMP FROM SY-102
			Data Log Setup	Dlg_test	
			Data Log Setup	Dlg_tst0	
			Data Log Setup	Dlg_tst1	
			Data Log Setup	R_Transf	
PCU-1\LI-3102_A	Digital	PCU-1 INPUT ANALOG OVER OR UNDER RANGE ALARM	Display	11sy101	HANFORD CROSS SITE TRANSFER SYSTEM - PCU-1 - TRANSFER PUMP FROM SY-101
			Display	12sy102	HANFORD CROSS SITE TRANSFER SYSTEM - PCU-1 - TRANSFER PUMP FROM SY-102
			Data Log Setup	Dlg_test	
			Data Log Setup	Dlg_tst0	
			Alarm Subsystem	Alarmed Tag	
PCU-1\LI-3102_A_ACK	Digital	PCU-1 INPUT ANALOG OVER OR UNDER RANGE ALARM ACKNOWLEDGE	Alarm Acknowledge Bit Tag	PCU-1\LI-3102_A	
PCU-1\P-101-WT-RESET	Digital	RESET PUMP SY-101-WT-P-350 INTERLOCKS			
PCU-1\P-101-WT-RUN	Digital	RUN PUMP SY-101-WT-P-350	Display	11sy101	HANFORD CROSS SITE TRANSFER SYSTEM - PCU-1 - TRANSFER PUMP FROM SY-101
PCU-1\P-101E	Digital	TRANSFER PUMP SY-101-WT-P-350 ENABLED	Display	00Entry	TEST ENTRY
			Display	11sy101	HANFORD CROSS SITE TRANSFER SYSTEM - PCU-1 - TRANSFER PUMP FROM SY-101
			Display	Pmp350pid	Transfer Pump Popup
PCU-1\P-101R	Digital	TRANSFER PUMP SY-101-WT-P-350 RUNNING	Display	00Entry	TEST ENTRY
			Display	11sy101	HANFORD CROSS SITE TRANSFER SYSTEM - PCU-1 - TRANSFER PUMP FROM SY-101
			Display	Pmp350pid	Transfer Pump Popup
PCU-1\P-102-SY-02A1	Digital	START PUMP P-102-SY-02A Y75	Display	12sy102	HANFORD CROSS SITE TRANSFER SYSTEM - PCU-1 - TRANSFER PUMP FROM SY-102
			Data Log Setup	R_Transf	
PCU-1\P-102-SY-02A2	Digital	STOP PUMP P-102-SY-02A Y75			
PCU-1\P-102-SY-02A3	Digital	TRANSFER PUMP P-102-SY-02A RUNNING AUX	Display	12sy102	HANFORD CROSS SITE TRANSFER SYSTEM - PCU-1 - TRANSFER PUMP FROM SY-102
PCU-1\P-102-SY-02A4	Digital	TRANSFER PUMP P-102-SY-02A ENABLED - POWER ON			
PCU-1\P-102-SY-02EN	Digital	START PERMISSIVE P-102-SY-02A [ON=ENAB]			
PCU-1\P-3100A1	Digital	START PUMP P-3100A Y-90.1			
PCU-1\P-3100A2	Digital	STOP PUMP P-3100A Y-90.1			
PCU-1\P-3100A3	Digital	FLUSH PUMP RUN CONTACT	Display	13flush	HANFORD CROSS SITE TRANSFER SYSTEM - PCU-1 - FLUSH SYSTEM
			Display	Pmp3100a	Flush Pump Popup
PCU-1\PAH-350	Digital	SY-101-WT-P-350 TRANSFER PUMP HIGH DISCHARGE PRESSURE ALARM	Alarm Subsystem	Alarmed Tag	
PCU-1\PAH-350_ACK	Digital	SY-101-WT-P-350 TRANSFER PUMP HIGH DISCHARGE PRESSURE ALARM ACKNOWLEDGE	Alarm Acknowledge Bit Tag	PCU-1\PAH-350	
PCU-1\PCU1-SP-AI-53	Analog	SPARE ANALOG INPUT			
PCU-1\PCU1-SP-AI-53_A	Digital	PCU-1 INPUT ANALOG OVER OR UNDER RANGE ALARM			
PCU-1\PCU1-SP-AI-54	Analog	SPARE ANALOG INPUT			
PCU-1\PCU1-SP-AI-54_A	Digital	PCU-1 INPUT ANALOG OVER OR UNDER RANGE ALARM			
PCU-1\PCU1-SP-AI-56	Analog	SPARE ANALOG INPUT			

Tag Name	Tag Type	Tag Description	Component Type	Component Name	Component Description
PCU-1\PCU1-SP-AI-56_A	Digital	PCU-1 INPUT ANALOG OVER OR UNDER RANGE ALARM			
PCU-1\PCU1-SP-AI-57	Analog	SPARE ANALOG INPUT			
PCU-1\PCU1-SP-AI-57_A	Digital	PCU-1 INPUT ANALOG OVER OR UNDER RANGE ALARM			
PCU-1\PCU1-SP-AI-58	Analog	SPARE ANALOG INPUT			
PCU-1\PCU1-SP-AI-58_A	Digital	PCU-1 INPUT ANALOG OVER OR UNDER RANGE ALARM			
PCU-1\PCU1-SP-AI-6	Analog	SPARE ANALOG INPUT			
PCU-1\PCU1-SP-AI-6_A	Digital	PCU-1 INPUT ANALOG OVER OR UNDER RANGE ALARM			
PCU-1\PCU1-SP-AO-3	Analog	SPARE ANALOG OUTPUT			
PCU-1\PCU1-SP-AO-4	Analog	SPARE ANALOG OUTPUT			
PCU-1\PCU1-SP-I3-03	Digital	SPARE DIGITAL INPUT			
PCU-1\PCU1-SP-I3-13	Digital	SPARE DIGITAL INPUT			
PCU-1\PCU1-SP-I3-14	Digital	SPARE DIGITAL INPUT			
PCU-1\PCU1-SP-I3-15	Digital	SPARE DIGITAL INPUT			
PCU-1\PCU1-SP-I3-16	Digital	SPARE DIGITAL INPUT			
PCU-1\PCU1-SP-I3-17	Digital	SPARE DIGITAL INPUT			
PCU-1\PCU1-SP-O7-10	Digital	SPARE DIGITAL OUTPUT			
PCU-1\PCU1-SP-O7-11	Digital	SPARE DIGITAL OUTPUT			
PCU-1\PCU1-SP-O7-12	Digital	SPARE DIGITAL OUTPUT			
PCU-1\PCU1-SP-O7-13	Digital	SPARE DIGITAL OUTPUT			
PCU-1\PCU1-SP-O7-14	Digital	SPARE DIGITAL OUTPUT			
PCU-1\PCU1-SP-O7-15	Digital	SPARE DIGITAL OUTPUT			
PCU-1\PCU1-SP-O7-16	Digital	SPARE DIGITAL OUTPUT			
PCU-1\PCU1-SP-O7-17	Digital	SPARE DIGITAL OUTPUT			
PCU-1\PCU1-SP-TI-3	Analog	SPARE THERMOCOUPLE INPUT	Data Log Setup	Dlg_test	
			Data Log Setup	Dlg_tst0	
			Data Log Setup	Dlg_tst1	
PCU-1\PCU1-SP-TI-3_A	Digital	PCU-1 INPUT THERMOCOUPLE OVER OR UNDER RANGE ALARM	Data Log Setup	Dlg_test	
			Data Log Setup	Dlg_tst0	
PCU-1\PCU1-SP-TI-4	Analog	SPARE THERMOCOUPLE INPUT	Data Log Setup	Dlg_test	
			Data Log Setup	Dlg_tst0	
			Data Log Setup	Dlg_tst1	
PCU-1\PCU1-SP-TI-4_A	Digital	PCU-1 INPUT THERMOCOUPLE OVER OR UNDER RANGE ALARM	Data Log Setup	Dlg_test	
			Data Log Setup	Dlg_tst0	
PCU-1\PCU1-SP-TI-5	Analog	SPARE THERMOCOUPLE INPUT	Data Log Setup	Dlg_test	
			Data Log Setup	Dlg_tst0	
			Data Log Setup	Dlg_tst1	
PCU-1\PCU1-SP-TI-5_A	Digital	PCU-1 INPUT THERMOCOUPLE OVER OR UNDER RANGE ALARM	Data Log Setup	Dlg_test	
			Data Log Setup	Dlg_tst0	
PCU-1\PCU1-SP-TI-6	Analog	SPARE THERMOCOUPLE INPUT			
PCU-1\PCU1-SP-TI-6_A	Digital	PCU-1 INPUT THERMOCOUPLE OVER OR UNDER RANGE ALARM			
PCU-1\PCU1-SP-TI-7	Analog	SPARE THERMOCOUPLE INPUT			
PCU-1\PCU1-SP-TI-7_A	Digital	PCU-1 INPUT THERMOCOUPLE OVER OR UNDER RANGE ALARM			
PCU-1\PCU1-SP-TI-8	Analog	SPARE THERMOCOUPLE INPUT			
PCU-1\PCU1-SP-TI-8_A	Digital	PCU-1 INPUT THERMOCOUPLE OVER OR UNDER RANGE ALARM			
PCU-1\PI-368	Analog	SY-101-WT-P-350 TRANSFER PUMP DISCHARGE PRESSURE	Display	11sy101	HANFORD CROSS SITE TRANSFER SYSTEM - PCU-1 - TRANSFER PUMP FROM SY-101
PCU-1\PI-368_A	Digital	PCU-1 INPUT ANALOG OVER OR UNDER RANGE ALARM	Macro	Alm_Suppress	
			Alarm Subsystem	Alarmed Tag	
PCU-1\PI-368_A_ACK	Digital	PCU-1 INPUT ANALOG OVER OR UNDER RANGE ALARM ACKNOWLEDGE	Alarm Acknowledge Bit Tag	PCU-1\PI-368_A	
PCU-1\PID-3101-FR	Analog	TRANSFER PUMP SY-101-WT-P-350 FLOW SETPOINT REF FROM OIT	Display	11sy101	HANFORD CROSS SITE TRANSFER SYSTEM - PCU-1 - TRANSFER PUMP FROM SY-101
			Display	Pmp350pid	Transfer Pump Popup
PCU-1\PID-3101-KD	Analog	TRANSFER PUMP SY-101-WT-P-350 PID DERIVITIVE GAIN REF FROM OIT			
PCU-1\PID-3101-KI	Analog	TRANSFER PUMP SY-101-WT-P-350 PID INTEGRAL GAIN REF FROM OIT			
PCU-1\PID-3101-KP	Analog	TRANSFER PUMP SY-101-WT-P-350 PID PROPORTIONAL GAIN REF FROM OIT			
PCU-1\PID-3101-MR	Analog	TRANSFER PUMP SY-101-WT-P-350 MANUAL REF FROM OIT	Display	11sy101	HANFORD CROSS SITE TRANSFER SYSTEM - PCU-1 - TRANSFER PUMP FROM SY-101
PCU-1\PID-3101-OUT	Analog	SY-101-WT-P-350 TRANSFER PUMP SPEED CONTROL			
PCU-1\SI-350	Analog	SY-101-WT-P-350 TRANSFER PUMP SPEED	Display	11sy101	HANFORD CROSS SITE TRANSFER SYSTEM - PCU-1 - TRANSFER PUMP FROM SY-101
PCU-1\SI-350_A	Digital	PCU-1 INPUT ANALOG OVER OR UNDER RANGE ALARM	Alarm Subsystem	Alarmed Tag	

Tag Name	Tag Type	Tag Description	Component Type	Component Name	Component Description
PCU-1\SI-350_A_ACK	Digital	PCU-1 INPUT ANALOG OVER OR UNDER RANGE ALARM ACKNOWLEDGE	Alarm Acknowledge Bit Tag	PCU-1\SI-350_A	
PCU-1\TAH-302C-1A	Digital	CIRCULATION HEATER #1 HTR-302C-1 OUTLET TEMP [OFF = ALARM]	Macro	Alm_Suppress	
			Alarm Subsystem	Alarmed Tag	
PCU-1\TAH-302C-1A_ACK	Digital	CIRCULATION HEATER #1 HTR-302C-1 OUTLET TEMP ACKNOWLEDGE	Alarm Acknowledge Bit Tag	PCU-1\TAH-302C-1A	
PCU-1\TAH-302C-1B	Digital	CIRCULATION HEATER #2 HTR-302C-2 OUTLET TEMP [OFF = ALARM]	Macro	Alm_Suppress	
			Alarm Subsystem	Alarmed Tag	
PCU-1\TAH-302C-1B_ACK	Digital	CIRCULATION HEATER #2 HTR-302C-2 OUTLET TEMP ACKNOWLEDGE	Alarm Acknowledge Bit Tag	PCU-1\TAH-302C-1B	
PCU-1\TAH_CAB_PLC1	Digital	PLC-1 CABINET HIGH TEMPERATURE [OFF = ALARM]	Display	00Entry	TEST ENTRY
			Alarm Subsystem	Alarmed Tag	
PCU-1\TAH_CAB_PLC1_ACK	Digital	PLC-1 CABINET HIGH TEMPERATURE ACKNOWLEDGE	Alarm Acknowledge Bit Tag	PCU-1\TAH_CAB_PLC1	
PCU-1\TI-302C-1	Analog	TANK TK-302-C TEMPERATURE	Display	13flush	HANFORD CROSS SITE TRANSFER SYSTEM - PCU-1 - FLUSH SYSTEM
			Data Log Setup	Dlg_test	
			Data Log Setup	Dlg_tst0	
			Data Log Setup	Dlg_tst1	
PCU-1\TI-302C-1_A	Digital	PCU-1 INPUT THERMOCOUPLE OVER OR UNDER RANGE ALARM	Display	13flush	HANFORD CROSS SITE TRANSFER SYSTEM - PCU-1 - FLUSH SYSTEM
			Data Log Setup	Dlg_test	
			Data Log Setup	Dlg_tst0	
			Alarm Subsystem	Alarmed Tag	
PCU-1\TI-302C-1_A_ACK	Digital	PCU-1 INPUT THERMOCOUPLE OVER OR UNDER RANGE ALARM ACKNOWLEDGE	Alarm Acknowledge Bit Tag	PCU-1\TI-302C-1_A	
PCU-1\TI-302C-2	Analog	FLUSH PUMP P-3100A OUTLET TEMP LINE 3 INCH	Display	13flush	HANFORD CROSS SITE TRANSFER SYSTEM - PCU-1 - FLUSH SYSTEM
			Data Log Setup	Cross Site	
			Data Log Setup	Dlg_test	
			Data Log Setup	Dlg_tst0	
			Data Log Setup	Dlg_tst1	
			Data Log Setup	R_Transf	
PCU-1\TI-302C-2_A	Digital	PCU-1 INPUT THERMOCOUPLE OVER OR UNDER RANGE ALARM	Display	13flush	HANFORD CROSS SITE TRANSFER SYSTEM - PCU-1 - FLUSH SYSTEM
			Data Log Setup	Dlg_test	
			Data Log Setup	Dlg_tst0	
			Alarm Subsystem	Alarmed Tag	
PCU-1\TI-302C-2_A_ACK	Digital	PCU-1 INPUT THERMOCOUPLE OVER OR UNDER RANGE ALARM ACKNOWLEDGE	Alarm Acknowledge Bit Tag	PCU-1\TI-302C-2_A	
PCU-1\XA-058W	Digital	200-W MASTER SHUTDOWN CIRCUIT ACTIVATED Y-77.1	Display	11sy101	HANFORD CROSS SITE TRANSFER SYSTEM - PCU-1 - TRANSFER PUMP FROM SY-101
			Display	12sy102	HANFORD CROSS SITE TRANSFER SYSTEM - PCU-1 - TRANSFER PUMP FROM SY-102
			Macro	Alm_Suppress	
			Alarm Subsystem	Alarmed Tag	
PCU-1\XA-058W_ACK	Digital	200-W MASTER SHUTDOWN CIRCUIT ACTIVATED Y-77.1 ACKNOWLEDGE	Alarm Acknowledge Bit Tag	PCU-1\XA-058W	
PCU-1\XA-350	Digital	SY-101-WT-P-350 TRANSFER PUMP FAILURE	Display	00Entry	TEST ENTRY
			Display	11sy101	HANFORD CROSS SITE TRANSFER SYSTEM - PCU-1 - TRANSFER PUMP FROM SY-101
			Display	Pmp350pid	Transfer Pump Popup
			Alarm Subsystem	Alarmed Tag	
PCU-1\XA-350_ACK	Digital	SY-101-WT-P-350 TRANSFER PUMP FAILURE ALARM ACKNOWLEDGE	Alarm Acknowledge Bit Tag	PCU-1\XA-350	
PCU-1\YL-058W	Digital	OVERRIDE OF 200-W MASTER SHUTDOWN Y-77.1	Display	11sy101	HANFORD CROSS SITE TRANSFER SYSTEM - PCU-1 - TRANSFER PUMP FROM SY-101
			Display	12sy102	HANFORD CROSS SITE TRANSFER SYSTEM - PCU-1 - TRANSFER PUMP FROM SY-102

Tag Name	Tag Type	Tag Description	Component Type	Component Name	Component Description
PCU-1\ZL-3101C	Digital	TRANSFER PUMP SY-101-WT-P-350 RECIRCULATION MODE	Display	00Entry	TEST ENTRY
			Display	11sy101	HANFORD CROSS SITE TRANSFER SYSTEM - PCU-1 - TRANSFER PUMP FROM SY-101
PCU-1\ZL-3101D	Digital	TRANSFER PUMP SY-101-WT-P-350 TRANSFER MODE	Display	00Entry	TEST ENTRY
			Display	11sy101	HANFORD CROSS SITE TRANSFER SYSTEM - PCU-1 - TRANSFER PUMP FROM SY-101
PCU-1\ZL-3102C	Digital	TRANSFER PUMP P-102-SY-02A RECIRCULATION MODE Y-75.1	Display	11sy101	HANFORD CROSS SITE TRANSFER SYSTEM - PCU-1 - TRANSFER PUMP FROM SY-101
			Display	12sy102	HANFORD CROSS SITE TRANSFER SYSTEM - PCU-1 - TRANSFER PUMP FROM SY-102
PCU-1\ZL-3102D	Digital	TRANSFER PUMP P-102-SY-02A TRANSFER MODE Y-75.1	Display	12sy102	HANFORD CROSS SITE TRANSFER SYSTEM - PCU-1 - TRANSFER PUMP FROM SY-102
PCU-2\0_OFF	Digital	ALWAYS OFF PLACE HOLDER FOR PCU-2 VARIABLES	Display	04divbox	HANFORD CROSS SITE TRANSFER SYSTEM - PCU-2 - DIVERSION BOX 6241-A
			Display	07draina	HANFORD CROSS SITE TRANSFER SYSTEM - PCU-2 - BOOSTER PUMP P-3125A - DRAIN VALVES
			Display	08drainb	HANFORD CROSS SITE TRANSFER SYSTEM - PCU-2 - BOOSTER PUMP P-3125B - DRAIN VALVES
PCU-2\BATT_BAD_PLC2	Digital	PLC-2 BATTERY IS BAD OR MISSING	Tag Monitor	HeartBeat	
			Display	00Entry	TEST ENTRY
			Display	01overvw	HANFORD CROSS SITE TRANSFER SYSTEM - SYSTEM OVERVIEW DIAGRAM
			Alarm Subsystem	Alarmed Tag	
PCU-2\BATT_BAD_PLC2_ACK	Digital	PLC-2 BATTERY IS BAD OR MISSING ACKNOWLEDGE	Alarm Acknowledge Bit Tag	PCU-2\BATT_BAD_PLC2	
PCU-2\COM-2_OCS	Digital	COMMUN. WITH OCS IGNORED	Tag Monitor	HeartBeat	
			Display	01overvw	HANFORD CROSS SITE TRANSFER SYSTEM - SYSTEM OVERVIEW DIAGRAM
			Macro	Alm_Suppress	
			Alarm Subsystem	Alarmed Tag	
PCU-2\COM-2_OCS_ACK	Digital	COMMUN. WITH OCS IGNORED ACKNOWLEDGE	Alarm Acknowledge Bit Tag	PCU-2\COM-2_OCS	
PCU-2\COM-21	Digital	COMMUN. WITH PCU-1 IGNORED	Display	01overvw	HANFORD CROSS SITE TRANSFER SYSTEM - SYSTEM OVERVIEW DIAGRAM
			Alarm Subsystem	Alarmed Tag	
PCU-2\COM-21_ACK	Digital	COMMUN. WITH PCU-1 IGNORED ACKNOWLEDGE	Alarm Acknowledge Bit Tag	PCU-2\COM-21	
PCU-2\COM-23	Digital	COMMUN. WITH PCU-3 IGNORED	Display	00Entry	TEST ENTRY
			Display	01overvw	HANFORD CROSS SITE TRANSFER SYSTEM - SYSTEM OVERVIEW DIAGRAM
			Alarm Subsystem	Alarmed Tag	
PCU-2\COM-23_ACK	Digital	COMMUN. WITH PCU-3 IGNORED ACKNOWLEDGE	Alarm Acknowledge Bit Tag	PCU-2\COM-23	
PCU-2\COM-24	Digital	COMMUN. WITH PCU-4 IGNORED	Display	01overvw	HANFORD CROSS SITE TRANSFER SYSTEM - SYSTEM OVERVIEW DIAGRAM
			Alarm Subsystem	Alarmed Tag	
PCU-2\COM-24_ACK	Digital	COMMUN. WITH PCU-4 IGNORED ACKNOWLEDGE	Alarm Acknowledge Bit Tag	PCU-2\COM-24	
PCU-2\COM-25	Digital	COMMUN. WITH PCU-5 IGNORED	Display	01overvw	HANFORD CROSS SITE TRANSFER SYSTEM - SYSTEM OVERVIEW DIAGRAM
			Alarm Subsystem	Alarmed Tag	
PCU-2\COM-25_ACK	Digital	COMMUN. WITH PCU-5 IGNORED ACKNOWLEDGE	Alarm Acknowledge Bit Tag	PCU-2\COM-25	
PCU-2\COM-OCS_2	Digital	COMMUN. WITH PCU-2 IGNORED - DETECTED AT OCS	Display	01overvw	HANFORD CROSS SITE TRANSFER SYSTEM - SYSTEM OVERVIEW DIAGRAM
			Events	Mt_hb	Communications Heart Beat Event file
			Events	System	Event file
			Alarm Subsystem	Alarmed Tag	
PCU-2\COM-OCS_2_ACK	Digital	COMMUN. WITH PCU-2 IGNORED - DETECTED AT OCS ACKNOWLEDGE	Alarm Acknowledge Bit Tag	PCU-2\COM-OCS_2	

Tag Name	Tag Type	Tag Description	Component Type	Component Name	Component Description
PCU-2\COM_OCS_2_MNT	Digital	Communiations failure with the PLC detected in this OIT	Derived Tags	Mt_hb	Derived Tag file
			Alarm Subsystem	Alarmed Tag	
PCU-2\COM_OCS_2_OPR	Digital	Communiations failure with the PLC detected in this OIT	Derived Tags	Op_hb	Derived Tag file
			Alarm Subsystem	Alarmed Tag	
PCU-2\FAH-3125A1	Digital	LOW AIR FLOW PUMP SEAL PUMP P-3125A [OFF = ALARM] Y76	Display	04divbox	HANFORD CROSS SITE TRANSFER SYSTEM - PCU-2 - DIVERSION BOX 6241-A
			Derived Tags	Global	Derived Tag file
			Alarm Subsystem	Alarmed Tag	
PCU-2\FAH-3125A1_ACK	Digital	LOW AIR FLOW PUMP SEAL PUMP P-3125A [OFF = ALARM] Y76 ACKNOWLEDGE	Alarm Acknowledge Bit Tag	PCU-2\FAH-3125A1	
PCU-2\FAH-3125A2	Digital	LOW AIR FLOW PUMP SEAL PUMP P-3125A [OFF = ALARM] Y76	Display	04divbox	HANFORD CROSS SITE TRANSFER SYSTEM - PCU-2 - DIVERSION BOX 6241-A
			Derived Tags	Global	Derived Tag file
			Alarm Subsystem	Alarmed Tag	
PCU-2\FAH-3125A2_ACK	Digital	LOW AIR FLOW PUMP SEAL PUMP P-3125A [OFF = ALARM] Y76 ACKNOWLEDGE	Alarm Acknowledge Bit Tag	PCU-2\FAH-3125A2	
PCU-2\FAH-3125B1	Digital	LOW AIR FLOW PUMP SEAL PUMP P-3125B [OFF = ALARM] Y76	Display	04divbox	HANFORD CROSS SITE TRANSFER SYSTEM - PCU-2 - DIVERSION BOX 6241-A
			Derived Tags	Global	Derived Tag file
			Alarm Subsystem	Alarmed Tag	
PCU-2\FAH-3125B1_ACK	Digital	LOW AIR FLOW PUMP SEAL PUMP P-3125B [OFF = ALARM] Y76 ACKNOWLEDGE	Alarm Acknowledge Bit Tag	PCU-2\FAH-3125B1	
PCU-2\FAH-3125B2	Digital	LOW AIR FLOW PUMP SEAL PUMP P-3125B [OFF = ALARM] Y76	Display	04divbox	HANFORD CROSS SITE TRANSFER SYSTEM - PCU-2 - DIVERSION BOX 6241-A
			Derived Tags	Global	Derived Tag file
			Alarm Subsystem	Alarmed Tag	
PCU-2\FAH-3125B2_ACK	Digital	LOW AIR FLOW PUMP SEAL PUMP P-3125B [OFF = ALARM] Y76 ACKNOWLEDGE	Alarm Acknowledge Bit Tag	PCU-2\FAH-3125B2	
PCU-2\FIC-3125	Analog	PUMP P-3125 A/B OUTLET FLOW	Display	04divbox	HANFORD CROSS SITE TRANSFER SYSTEM - PCU-2 - DIVERSION BOX 6241-A
			Display	05p3125a	HANFORD CROSS SITE TRANSFER SYSTEM - PCU-2 - BOOSTER PUMP P-3125A
			Display	06p3125b	HANFORD CROSS SITE TRANSFER SYSTEM - PCU-2 - BOOSTER PUMP P-3125B
			Display	Pmp350pid	Transfer Pump Popup
			Display	Test	HANFORD CROSS SITE TRANSFER SYSTEM - TEST AND DEMONSTRATION DISPLAY
			Data Log Setup	Dlg_tst1	
			Data Log Setup	P3125	
PCU-2\FIC-3125-E	Analog	PUMP P-3125 A/B PID CONTROL ERROR	Display	05p3125a	HANFORD CROSS SITE TRANSFER SYSTEM - PCU-2 - BOOSTER PUMP P-3125A
			Display	06p3125b	HANFORD CROSS SITE TRANSFER SYSTEM - PCU-2 - BOOSTER PUMP P-3125B
			Display	Pmp350pid	Transfer Pump Popup
			Display	Test	HANFORD CROSS SITE TRANSFER SYSTEM - TEST AND DEMONSTRATION DISPLAY
			Data Log Setup	Dlg_tst1	
			Data Log Setup	P3125	
PCU-2\FIC-3125-O	Analog	PUMP P-3125 A/B OUTLET FLOW / DRIVE SPEED REF OUTPUT	Display	05p3125a	HANFORD CROSS SITE TRANSFER SYSTEM - PCU-2 - BOOSTER PUMP P-3125A
			Display	06p3125b	HANFORD CROSS SITE TRANSFER SYSTEM - PCU-2 - BOOSTER PUMP P-3125B
			Display	Pmp350pid	Transfer Pump Popup
			Data Log Setup	Dlg_tst1	
PCU-2\FIC-3125_A	Digital	PCU-2 INPUT ANALOG OVER OR UNDER RANGE ALARM	Display	04divbox	HANFORD CROSS SITE TRANSFER SYSTEM - PCU-2 - DIVERSION BOX 6241-A
			Display	05p3125a	HANFORD CROSS SITE TRANSFER SYSTEM - PCU-2 - BOOSTER PUMP P-3125A
			Display	06p3125b	HANFORD CROSS SITE TRANSFER SYSTEM - PCU-2 - BOOSTER PUMP P-3125B
			Alarm Subsystem	Alarmed Tag	
PCU-2\FIC-3125_A_ACK	Digital	PCU-2 INPUT ANALOG OVER OR UNDER RANGE ALARM ACKNOWLEDGE	Alarm Acknowledge Bit Tag	PCU-2\FIC-3125_A	

Tag Name	Tag Type	Tag Description	Component Type	Component Name	Component Description
PCU-2\FIC-3125A	Analog	PUMP P-3125A OUTLET FLOW CONTROL SIGNAL [DRIVE SPEED]	Display	Test	HANFORD CROSS SITE TRANSFER SYSTEM - TEST AND DEMONSTRATION DISPLAY
			Data Log Setup	Dlg_tst1	
			Data Log Setup	P3125	
PCU-2\FIC-3125B	Analog	PUMP P-3125B OUTLET FLOW CONTROL SIGNAL [DRIVE SPEED]	Display	Test	HANFORD CROSS SITE TRANSFER SYSTEM - TEST AND DEMONSTRATION DISPLAY
			Data Log Setup	Dlg_tst1	
			Data Log Setup	P3125	
PCU-2\HB_COMM_CNT	Analog	Communications checking counter	Tag Monitor	HeartBeat	
			Derived Tags	Comm_Check	Derived Tag file
PCU-2\HB_COMM_OK	Digital	Communications from PLC currently OK	Tag Monitor	HeartBeat	
			Derived Tags	Comm_Check	Derived Tag file
			Derived Tags	Mt_hb	Derived Tag file
			Derived Tags	Op_hb	Derived Tag file
PCU-2\HB_COMM_TIME	Analog	ACCUMULATED TIME FOR THE COMMUNICATION CHECK HEART-BEAT	Events	Mt_hb	Communications Heart Beat Event file
PCU-2\HB_OCS_PLC2	Digital	HEARTBEAT FROM OCS TO PLC-2	Tag Monitor	HeartBeat	
			Events	Mt_hb	Communications Heart Beat Event file
			Events	System	Event file
PCU-2\HB_OCS_PLC2_MNT	Analog	COMMUN. HEARTBEAT REGISTER FROM MAINTENANCE OIT TO PCU-2	Derived Tags	Mt_hb	Derived Tag file
PCU-2\HB_OCS_PLC2_OPR	Analog	COMMUN. HEARTBEAT REGISTER FROM OPERATIONS OIT TO PCU-2	Derived Tags	Op_hb	Derived Tag file
PCU-2\HB_PLC2_OCS	Digital	HEARTBEAT FROM PLC-2 TO OCS	Tag Monitor	HeartBeat	
			Events	Mt_hb	Communications Heart Beat Event file
			Events	System	Event file
PCU-2\HB_PLC2_OCS_BOTH	Analog	COMMUN. HEARTBEAT REGISTER FROM PCU-2 TO BOTH OPERATOR TERMINALS	Tag Monitor	HeartBeat	
			Derived Tags	Comm_Check	Derived Tag file
			Derived Tags	Comm_Reset	Derived Tag file
PCU-2\HB_REF	Analog	Communications heartbeat reference register	Tag Monitor	HeartBeat	
			Derived Tags	Comm_Check	Derived Tag file
			Derived Tags	Comm_Reset	Derived Tag file
PCU-2\HS-3125-M	Digital	PID FOR PUMP P-3125 A/B MANUAL MODE	Display	05p3125a	HANFORD CROSS SITE TRANSFER SYSTEM - PCU-2 - BOOSTER PUMP P-3125A
			Display	06p3125b	HANFORD CROSS SITE TRANSFER SYSTEM - PCU-2 - BOOSTER PUMP P-3125B
			Display	Pmp350pid	Transfer Pump Popup
PCU-2\HS-3125A1	Digital	START BOOSTER PUMP P-3125A Y-74.1			
PCU-2\HS-3125A2	Digital	STOP BOOSTER PUMP P-3125A Y-74.1			
PCU-2\HS-3125AA1	Digital	OPEN VALVE MOV-3125AA Y-79.1	Parameters	M3125aa	
PCU-2\HS-3125AA2	Digital	CLOSE VALVE MOV-3125AA Y-79.1	Parameters	M3125aa	
PCU-2\HS-3125AB1	Digital	OPEN VALVE MOV-3125AB Y-79.1	Parameters	M3125ab	
PCU-2\HS-3125AB2	Digital	CLOSE VALVE MOV-3125AB Y-79.1	Parameters	M3125ab	
PCU-2\HS-3125AC1	Digital	OPEN VALVE MOV-3125AC Y-79.1	Parameters	M3125ac	
PCU-2\HS-3125AC2	Digital	CLOSE VALVE MOV-3125AC Y-79.1	Parameters	M3125ac	
PCU-2\HS-3125AD1	Digital	OPEN VALVE MOV-3125AD Y-79.1	Parameters	M3125ad	
PCU-2\HS-3125AD2	Digital	CLOSE VALVE MOV-3125AD Y-79.1	Parameters	M3125ad	
PCU-2\HS-3125AE1	Digital	OPEN VALVE MOV-3125AE Y-79.1	Parameters	M3125ae	
PCU-2\HS-3125AE2	Digital	CLOSE VALVE MOV-3125AE Y-79.1	Parameters	M3125ae	
PCU-2\HS-3125AF1	Digital	OPEN VALVE MOV-3125AF Y-79.1	Parameters	M3125af	
PCU-2\HS-3125AF2	Digital	CLOSE VALVE MOV-3125AF Y-79.1	Parameters	M3125af	
PCU-2\HS-3125AG1	Digital	OPEN VALVE MOV-3125AG Y-79.1	Parameters	M3125ag	
PCU-2\HS-3125AG2	Digital	CLOSE VALVE MOV-3125AG Y-79.1	Parameters	M3125ag	
PCU-2\HS-3125AH1	Digital	OPEN VALVE MOV-3125AH Y-79.1	Parameters	M3125ah	
PCU-2\HS-3125AH2	Digital	CLOSE VALVE MOV-3125AH Y-79.1	Parameters	M3125ah	
PCU-2\HS-3125AJ1	Digital	OPEN VALVE MOV-3125AJ Y-79.2	Parameters	M3125aj	
PCU-2\HS-3125AJ2	Digital	CLOSE VALVE MOV-3125AJ Y-79.2	Parameters	M3125aj	
PCU-2\HS-3125AK1	Digital	OPEN VALVE MOV-3125AK Y-79.2	Parameters	M3125ak	
PCU-2\HS-3125AK2	Digital	CLOSE VALVE MOV-3125AK Y-79.2	Parameters	M3125ak	
PCU-2\HS-3125AZ	Digital	RESET VALVES FOR PUMP P-3125A Y-79.1			
PCU-2\HS-3125B1	Digital	START BOOSTER PUMP P-3125B Y-74.2			

Tag Name	Tag Type	Tag Description	Component Type	Component Name	Component Description
PCU-2\HS-3125B2	Digital	STOP BOOSTER PUMP P-3125B Y-74.2			
PCU-2\HS-3125BA1	Digital	OPEN VALVE MOV-3125BA Y-80.1	Parameters	M3125ba	
PCU-2\HS-3125BA2	Digital	CLOSE VALVE MOV-3125BA Y-80.1	Parameters	M3125ba	
PCU-2\HS-3125BB1	Digital	OPEN VALVE MOV-3125BB Y-80.1	Parameters	M3125bb	
PCU-2\HS-3125BB2	Digital	CLOSE VALVE MOV-3125BB Y-80.1	Parameters	M3125bb	
PCU-2\HS-3125BC1	Digital	OPEN VALVE MOV-3125BC Y-80.1	Parameters	M3125bc	
PCU-2\HS-3125BC2	Digital	CLOSE VALVE MOV-3125BC Y-80.1	Parameters	M3125bc	
PCU-2\HS-3125BD1	Digital	OPEN VALVE MOV-3125BD Y-80.1	Parameters	M3125bd	
PCU-2\HS-3125BD2	Digital	CLOSE VALVE MOV-3125BD Y-80.1	Parameters	M3125bd	
PCU-2\HS-3125BE1	Digital	OPEN VALVE MOV-3125BE Y-80.1	Parameters	M3125be	
PCU-2\HS-3125BE2	Digital	CLOSE VALVE MOV-3125BE Y-80.1	Parameters	M3125be	
PCU-2\HS-3125BF1	Digital	OPEN VALVE MOV-3125BF Y-80.1	Parameters	M3125bf	
PCU-2\HS-3125BF2	Digital	CLOSE VALVE MOV-3125BF Y-80.1	Parameters	M3125bf	
PCU-2\HS-3125BG1	Digital	OPEN VALVE MOV-3125BG Y-80.1	Parameters	M3125bg	
PCU-2\HS-3125BG2	Digital	CLOSE VALVE MOV-3125BG Y-80.1	Parameters	M3125bg	
PCU-2\HS-3125BH1	Digital	OPEN VALVE MOV-3125BH Y-80.1	Parameters	M3125bh	
PCU-2\HS-3125BH2	Digital	CLOSE VALVE MOV-3125BH Y-80.1	Parameters	M3125bh	
PCU-2\HS-3125BJ1	Digital	OPEN VALVE MOV-3125BJ Y-80.2	Parameters	M3125bj	
PCU-2\HS-3125BJ2	Digital	CLOSE VALVE MOV-3125BJ Y-80.2	Parameters	M3125bj	
PCU-2\HS-3125BK1	Digital	OPEN VALVE MOV-3125BK Y-80.2	Parameters	M3125bk	
PCU-2\HS-3125BK2	Digital	CLOSE VALVE MOV-3125BK Y-80.2	Parameters	M3125bk	
PCU-2\HS-3125BY	Digital	INITIATE DRAINING OF PUMP P-3125B Y-80.1			
PCU-2\HS-3125BZ	Digital	RESET VALVES FOR PUMP P-3125B Y-80.1			
PCU-2\HS-3125C1	Digital	OPEN VALVE SOV-3125C Y-84.1	Parameters	S3125c	
PCU-2\HS-3125C2	Digital	CLOSE VALVE SOV-3125C Y-84.1	Parameters	S3125c	
PCU-2\HS-3125D1	Digital	OPEN VALVE SOV-3125D Y-84.1	Parameters	S3125d	
PCU-2\HS-3125D2	Digital	CLOSE VALVE SOV-3125D Y-84.1	Parameters	S3125d	
PCU-2\HS-3125E1	Digital	OPEN VALVE SOV-3125E Y-83.1	Parameters	S3125e	
PCU-2\HS-3125E2	Digital	CLOSE VALVE SOV-3125E Y-83.1	Parameters	S3125e	
PCU-2\HS-3125G1	Digital	OPEN VALVE SOV-3125G Y-84.1	Parameters	S3125g	
PCU-2\HS-3125G2	Digital	CLOSE VALVE SOV-3125G Y-84.1	Parameters	S3125g	
PCU-2\HS-3156A1	Digital	OPEN VALVE MOV-3156A Y-89.1	Parameters	M3156a	
PCU-2\HS-3156A2	Digital	CLOSE VALVE MOV-3156A Y-89.1	Parameters	M3156a	
PCU-2\HS-3156B1	Digital	OPEN VALVE MOV-3156B Y-89.2	Parameters	M3156b	
PCU-2\HS-3156B2	Digital	CLOSE VALVE MOV-3156B Y-89.2	Parameters	M3156b	
PCU-2\HS-3163-1	Digital	OPEN VALVE MOV-3163 Y-79.2	Parameters	S3163	
PCU-2\HS-3163-2	Digital	CLOSE VALVE MOV-3163 Y-79.2	Parameters	S3163	
PCU-2\HS-3173A1	Digital	OPEN VALVE SOV-3173A Y-87.1	Parameters	S3173a	
PCU-2\HS-3173A2	Digital	CLOSE VALVE SOV-3173A Y-87.1	Parameters	S3173a	
PCU-2\HS-3173B1	Digital	OPEN VALVE SOV-3173B Y-87.2	Parameters	S3173b	
PCU-2\HS-3173B2	Digital	CLOSE VALVE SOV-3173B Y-87.2	Parameters	S3173b	
PCU-2\HS-3182A1	Digital	OCS OPEN VALVE SOV-3182A Y-71.1	Parameters	S3182a	
PCU-2\HS-3182A2	Digital	OCS CLOSE VALVE SOV-3182A Y-71.1	Parameters	S3182a	
PCU-2\HS-3182B1	Digital	OCS OPEN VALVE SOV-3182B Y-71.1	Parameters	S3182b	
PCU-2\HS-3182B2	Digital	OCS CLOSE VALVE SOV-3182B Y-71.1	Parameters	S3182b	
PCU-2\HS-3183A1	Digital	OCS OPEN VALVE SOV-3183A Y-71.1	Parameters	S3183a	
PCU-2\HS-3183A2	Digital	OCS CLOSE VALVE SOV-3183A Y-71.1	Parameters	S3183a	
PCU-2\HS-3183B1	Digital	OCS OPEN VALVE SOV-3183B Y-71.1	Parameters	S3183b	
PCU-2\HS-3183B2	Digital	OCS CLOSE VALVE SOV-3183B Y-71.1	Parameters	S3183b	
PCU-2\HS-3184-1	Digital	OCS OPEN VALVE SOV-3184 Y-71.1	Parameters	S3184	
PCU-2\HS-3184-2	Digital	OCS CLOSE VALVE SOV-3184 Y-71.1	Parameters	S3184	
PCU-2\LAL-3125A1	Digital	PUMP P-3125A LOW OIL LEVEL [OFF = ALARM] Y76	Display	04divbox	HANFORD CROSS SITE TRANSFER SYSTEM - PCU-2 - DIVERSION BOX 6241-A
			Derived Tags Alarm Subsystem	Global Alarmed Tag	Derived Tag file
PCU-2\LAL-3125A1_ACK	Digital	PUMP P-3125A LOW OIL LEVEL [OFF = ALARM] Y76 ACKNOWLEDGE	Alarm Acknowledge Bit Tag	PCU-2\LAL-3125A1	
PCU-2\LAL-3125A2	Digital	PUMP P-3125A LOW OIL LEVEL [OFF = ALARM] Y76	Display	04divbox	HANFORD CROSS SITE TRANSFER SYSTEM - PCU-2 - DIVERSION BOX 6241-A
			Derived Tags Alarm Subsystem	Global Alarmed Tag	Derived Tag file
PCU-2\LAL-3125A2_ACK	Digital	PUMP P-3125A LOW OIL LEVEL [OFF = ALARM] Y76 ACKNOWLEDGE	Alarm Acknowledge Bit Tag	PCU-2\LAL-3125A2	

Tag Name	Tag Type	Tag Description	Component Type	Component Name	Component Description
PCU-2\LAL-3125B1	Digital	PUMP P-3125B LOW OIL LEVEL [OFF = ALARM] Y76	Display	04divbox	HANFORD CROSS SITE TRANSFER SYSTEM - PCU-2 - DIVERSION BOX 6241-A
			Derived Tags	Global	Derived Tag file
			Alarm Subsystem	Alarmed Tag	
PCU-2\LAL-3125B1_ACK	Digital	PUMP P-3125B LOW OIL LEVEL [OFF = ALARM] Y76 ACKNOWLEDGE	Alarm Acknowledge Bit Tag	PCU-2\LAL-3125B1	
PCU-2\LAL-3125B2	Digital	PUMP P-3125B LOW OIL LEVEL [OFF = ALARM] Y76	Display	04divbox	HANFORD CROSS SITE TRANSFER SYSTEM - PCU-2 - DIVERSION BOX 6241-A
			Derived Tags	Global	Derived Tag file
			Alarm Subsystem	Alarmed Tag	
PCU-2\LAL-3125B2_ACK	Digital	PUMP P-3125B LOW OIL LEVEL [OFF = ALARM] Y76 ACKNOWLEDGE	Alarm Acknowledge Bit Tag	PCU-2\LAL-3125B2	
PCU-2\LDA-3150	Digital	LEAK DETECTED AT DIVERSION BOX 6241-A SUMP Y-72.1	Display	01overvw	HANFORD CROSS SITE TRANSFER SYSTEM - SYSTEM OVERVIEW DIAGRAM
			Display	04divbox	HANFORD CROSS SITE TRANSFER SYSTEM - PCU-2 - DIVERSION BOX 6241-A
			Alarm Subsystem	Alarmed Tag	
PCU-2\LDA-3150_ACK	Digital	LEAK DETECTED AT DIVERSION BOX 6241-A SUMP Y-72.1 ACKNOWLEDGE	Alarm Acknowledge Bit Tag	PCU-2\LDA-3150	
PCU-2\LDA-3160	Digital	6241-A ENCASEMENT LEAK DETECTION [OFF = ALARM] Y72	Display	01overvw	HANFORD CROSS SITE TRANSFER SYSTEM - SYSTEM OVERVIEW DIAGRAM
			Display	04divbox	HANFORD CROSS SITE TRANSFER SYSTEM - PCU-2 - DIVERSION BOX 6241-A
			Alarm Subsystem	Alarmed Tag	
PCU-2\LDA-3160_ACK	Digital	6241-A ENCASEMENT LEAK DETECTION [OFF = ALARM] Y72 ACKNOWLEDGE	Alarm Acknowledge Bit Tag	PCU-2\LDA-3160	
PCU-2\LDAH-3150	Digital	6241-A SUMP LEAK DETECTION Y72			
PCU-2\LDXA-3150	Digital	SUMP LEAK DETECTOR Y72			
PCU-2\MOV-3125AA1	Digital	OPEN VALVE MOV-3125AA Y79-1			
PCU-2\MOV-3125AA2	Digital	CLOSE VALVE MOV-3125AA Y79-1			
PCU-2\MOV-3125AB1	Digital	OPEN VALVE MOV-3125AB Y79-1			
PCU-2\MOV-3125AB2	Digital	CLOSE VALVE MOV-3125AB Y79-1			
PCU-2\MOV-3125AC1	Digital	OPEN VALVE MOV-3125AC Y79-1			
PCU-2\MOV-3125AC2	Digital	CLOSE VALVE MOV-3125AC Y79-1			
PCU-2\MOV-3125AD1	Digital	OPEN VALVE MOV-3125AD Y79-1			
PCU-2\MOV-3125AD2	Digital	CLOSE VALVE MOV-3125AD Y79-1			
PCU-2\MOV-3125AE1	Digital	OPEN VALVE MOV-3125AE Y79-1			
PCU-2\MOV-3125AE2	Digital	CLOSE VALVE MOV-3125AE Y79-1			
PCU-2\MOV-3125AF1	Digital	OPEN VALVE MOV-3125AF Y79-1			
PCU-2\MOV-3125AF2	Digital	CLOSE VALVE MOV-3125AF Y79-1			
PCU-2\MOV-3125AG1	Digital	OPEN VALVE MOV-3125AG Y79-1			
PCU-2\MOV-3125AG2	Digital	CLOSE VALVE MOV-3125AG Y79-1			
PCU-2\MOV-3125AH1	Digital	OPEN VALVE MOV-3125AH Y79-1			
PCU-2\MOV-3125AH2	Digital	CLOSE VALVE MOV-3125AH Y79-1			
PCU-2\MOV-3125AJ1	Digital	OPEN VALVE MOV-3125AJ Y79-2			
PCU-2\MOV-3125AJ2	Digital	CLOSE VALVE MOV-3125AJ Y79-2			
PCU-2\MOV-3125AK1	Digital	OPEN VALVE MOV-3125AK Y79-2			
PCU-2\MOV-3125AK2	Digital	CLOSE VALVE MOV-3125AK Y79-2			
PCU-2\MOV-3125BA1	Digital	OPEN VALVE MOV-3125BA Y80-1			
PCU-2\MOV-3125BA2	Digital	CLOSE VALVE MOV-3125BA Y80-1			
PCU-2\MOV-3125BB1	Digital	OPEN VALVE MOV-3125BB Y80-1			
PCU-2\MOV-3125BB2	Digital	CLOSE VALVE MOV-3125BB Y80-1			
PCU-2\MOV-3125BC1	Digital	OPEN VALVE MOV-3125BC Y80-1			
PCU-2\MOV-3125BC2	Digital	CLOSE VALVE MOV-3125BC Y80-1			
PCU-2\MOV-3125BD1	Digital	OPEN VALVE MOV-3125BD Y80-1			
PCU-2\MOV-3125BD2	Digital	CLOSE VALVE MOV-3125BD Y80-1			
PCU-2\MOV-3125BE1	Digital	OPEN VALVE MOV-3125BE Y80-1			
PCU-2\MOV-3125BE2	Digital	CLOSE VALVE MOV-3125BE Y80-1			
PCU-2\MOV-3125BF1	Digital	OPEN VALVE MOV-3125BF Y80-1			
PCU-2\MOV-3125BF2	Digital	CLOSE VALVE MOV-3125BF Y80-1			
PCU-2\MOV-3125BG1	Digital	OPEN VALVE MOV-3125BG Y80-1			
PCU-2\MOV-3125BG2	Digital	CLOSE VALVE MOV-3125BG Y80-1			
PCU-2\MOV-3125BH1	Digital	OPEN VALVE MOV-3125BH Y80-1			
PCU-2\MOV-3125BH2	Digital	CLOSE VALVE MOV-3125BH Y80-1			
PCU-2\MOV-3125BJ1	Digital	OPEN VALVE MOV-3125BJ Y80-2			
PCU-2\MOV-3125BJ2	Digital	CLOSE VALVE MOV-3125BJ Y80-2			
PCU-2\MOV-3125BK1	Digital	OPEN VALVE MOV-3125BK Y80-2			
PCU-2\MOV-3125BK2	Digital	CLOSE VALVE MOV-3125BK Y80-2			
PCU-2\MOV-3156A1	Digital	OPEN VALVE MOV-3156A Y89-1			
PCU-2\MOV-3156A2	Digital	CLOSE VALVE MOV-3156A Y89-1			
PCU-2\MOV-3156B1	Digital	OPEN VALVE MOV-3156B Y89-2			
PCU-2\MOV-3156B2	Digital	CLOSE VALVE MOV-3156B Y89-2			
PCU-2\P-3115	Digital	SHUTDOWN SUMP PUMP P-3115 Y-82.1			
PCU-2\P-3125A1	Digital	START PUMP P-3125A Y74-1	Display	00Entry	TEST ENTRY
			Display	04divbox	HANFORD CROSS SITE TRANSFER SYSTEM - PCU-2 - DIVERSION BOX 6241-A

Tag Name	Tag Type	Tag Description	Component Type	Component Name	Component Description
			Display	05p3125a	HANFORD CROSS SITE TRANSFER SYSTEM - PCU-2 - BOOSTER PUMP P-3125A
			Display	06p3125b	HANFORD CROSS SITE TRANSFER SYSTEM - PCU-2 - BOOSTER PUMP P-3125B
			Data Log Setup	R_Transf	
PCU-2\P-3125A2	Digital	STOP PUMP P-3125A Y74-1	Display	00Entry	TEST ENTRY
			Display	05p3125a	HANFORD CROSS SITE TRANSFER SYSTEM - PCU-2 - BOOSTER PUMP P-3125A
PCU-2\P-3125B1	Digital	START PUMP P-3125B Y74-2	Display	00Entry	TEST ENTRY
			Display	04divbox	HANFORD CROSS SITE TRANSFER SYSTEM - PCU-2 - DIVERSION BOX 6241-A
			Display	05p3125a	HANFORD CROSS SITE TRANSFER SYSTEM - PCU-2 - BOOSTER PUMP P-3125A
			Display	06p3125b	HANFORD CROSS SITE TRANSFER SYSTEM - PCU-2 - BOOSTER PUMP P-3125B
			Data Log Setup	R_Transf	
PCU-2\P-3125B2	Digital	STOP PUMP P-3125B Y74-2	Display	00Entry	TEST ENTRY
			Display	06p3125b	HANFORD CROSS SITE TRANSFER SYSTEM - PCU-2 - BOOSTER PUMP P-3125B
PCU-2\PAH-3125A	Digital	BOOSTER PUMP HIGH INLET PRESSURE Y-75.1	Display	04divbox	HANFORD CROSS SITE TRANSFER SYSTEM - PCU-2 - DIVERSION BOX 6241-A
			Display	05p3125a	HANFORD CROSS SITE TRANSFER SYSTEM - PCU-2 - BOOSTER PUMP P-3125A
			Derived Tags	Global	Derived Tag file
			Alarm Subsystem	Alarmed Tag	
PCU-2\PAH-3125A_ACK	Digital	BOOSTER PUMP HIGH INLET PRESSURE Y-75.1 ACKNOWLEDGE	Alarm Acknowledge Bit Tag	PCU-2\PAH-3125A	
PCU-2\PAH-3125B	Digital	BOOSTER PUMP HIGH INLET PRESSURE Y-75.1	Display	04divbox	HANFORD CROSS SITE TRANSFER SYSTEM - PCU-2 - DIVERSION BOX 6241-A
			Display	06p3125b	HANFORD CROSS SITE TRANSFER SYSTEM - PCU-2 - BOOSTER PUMP P-3125B
			Derived Tags	Global	Derived Tag file
			Alarm Subsystem	Alarmed Tag	
PCU-2\PAH-3125B_ACK	Digital	BOOSTER PUMP HIGH INLET PRESSURE Y-75.1 ACKNOWLEDGE	Alarm Acknowledge Bit Tag	PCU-2\PAH-3125B	
PCU-2\PAH-3125C	Digital	BOOSTER PUMP HIGH DISCHARGE PRESSURE Y-78.1	Display	04divbox	HANFORD CROSS SITE TRANSFER SYSTEM - PCU-2 - DIVERSION BOX 6241-A
			Display	05p3125a	HANFORD CROSS SITE TRANSFER SYSTEM - PCU-2 - BOOSTER PUMP P-3125A
			Derived Tags	Global	Derived Tag file
			Alarm Subsystem	Alarmed Tag	
PCU-2\PAH-3125C_ACK	Digital	BOOSTER PUMP HIGH DISCHARGE PRESSURE Y-78.1 ACKNOWLEDGE	Alarm Acknowledge Bit Tag	PCU-2\PAH-3125C	
PCU-2\PAH-3125D	Digital	BOOSTER PUMP HIGH DISCHARGE PRESSURE Y-78.1	Display	04divbox	HANFORD CROSS SITE TRANSFER SYSTEM - PCU-2 - DIVERSION BOX 6241-A
			Display	06p3125b	HANFORD CROSS SITE TRANSFER SYSTEM - PCU-2 - BOOSTER PUMP P-3125B
			Derived Tags	Global	Derived Tag file
			Alarm Subsystem	Alarmed Tag	
PCU-2\PAH-3125D_ACK	Digital	BOOSTER PUMP HIGH DISCHARGE PRESSURE Y-78.1 ACKNOWLEDGE	Alarm Acknowledge Bit Tag	PCU-2\PAH-3125D	
PCU-2\PAH-3173	Digital	VALVE SOV-3173A/B FAILURE Y-73.1	Display	04divbox	HANFORD CROSS SITE TRANSFER SYSTEM - PCU-2 - DIVERSION BOX 6241-A
			Alarm Subsystem	Alarmed Tag	
PCU-2\PAH-3173_ACK	Digital	VALVE SOV-3173A/B FAILURE Y-73.1 ACKNOWLEDGE	Alarm Acknowledge Bit Tag	PCU-2\PAH-3173	
PCU-2\PAH-3182	Digital	VALVE SOV-3182A/B FAILURE	Display	04divbox	HANFORD CROSS SITE TRANSFER SYSTEM - PCU-2 - DIVERSION BOX 6241-A
			Alarm Subsystem	Alarmed Tag	
PCU-2\PAH-3182_ACK	Digital	VALVE SOV-3182A/B FAILURE ACKNOWLEDGE	Alarm Acknowledge Bit Tag	PCU-2\PAH-3182	

Tag Name	Tag Type	Tag Description	Component Type	Component Name	Component Description
PCU-2\PAH-3183	Digital	VALVE SOV-3183A/B FAILURE	Display	04divbox	HANFORD CROSS SITE TRANSFER SYSTEM - PCU-2 - DIVERSION BOX 6241-A
			Alarm Subsystem	Alarmed Tag	
PCU-2\PAH-3183_ACK	Digital	VALVE SOV-3183A/B FAILURE ACKNOWLEDGE	Alarm Acknowledge Bit Tag	PCU-2\PAH-3183	
PCU-2\PAL-3100A	Digital	LOW COMPRESSOR SA-CMP-3101A PRESSURE	Display	01overvw	HANFORD CROSS SITE TRANSFER SYSTEM - SYSTEM OVERVIEW DIAGRAM
			Display	04divbox	HANFORD CROSS SITE TRANSFER SYSTEM - PCU-2 - DIVERSION BOX 6241-A
			Alarm Subsystem	Alarmed Tag	
PCU-2\PAL-3100A_ACK	Digital	LOW COMPRESSOR SA-CMP-3101A PRESSURE ACKNOWLEDGE	Alarm Acknowledge Bit Tag	PCU-2\PAL-3100A	
PCU-2\PAL-3125A	Digital	BOOSTER PUMP LOW INLET PRESSURE Y-74.1	Display	04divbox	HANFORD CROSS SITE TRANSFER SYSTEM - PCU-2 - DIVERSION BOX 6241-A
			Display	05p3125a	HANFORD CROSS SITE TRANSFER SYSTEM - PCU-2 - BOOSTER PUMP P-3125A
			Derived Tags	Global	Derived Tag file
			Alarm Subsystem	Alarmed Tag	
PCU-2\PAL-3125A_ACK	Digital	BOOSTER PUMP LOW INLET PRESSURE Y-74.1 ACKNOWLEDGE	Alarm Acknowledge Bit Tag	PCU-2\PAL-3125A	
PCU-2\PAL-3125A1	Digital	PUMP P-3125A SEAL FAILURE [OFF = ALARM] Y76	Display	04divbox	HANFORD CROSS SITE TRANSFER SYSTEM - PCU-2 - DIVERSION BOX 6241-A
			Derived Tags	Global	Derived Tag file
			Alarm Subsystem	Alarmed Tag	
PCU-2\PAL-3125A1_ACK	Digital	PUMP P-3125A SEAL FAILURE [OFF = ALARM] Y76 ACKNOWLEDGE	Alarm Acknowledge Bit Tag	PCU-2\PAL-3125A1	
PCU-2\PAL-3125A2	Digital	PUMP P-3125A SEAL FAILURE [OFF = ALARM] Y76	Display	04divbox	HANFORD CROSS SITE TRANSFER SYSTEM - PCU-2 - DIVERSION BOX 6241-A
			Derived Tags	Global	Derived Tag file
			Alarm Subsystem	Alarmed Tag	
PCU-2\PAL-3125A2_ACK	Digital	PUMP P-3125A SEAL FAILURE [OFF = ALARM] Y76 ACKNOWLEDGE	Alarm Acknowledge Bit Tag	PCU-2\PAL-3125A2	
PCU-2\PAL-3125B	Digital	BOOSTER PUMP LOW INLET PRESSURE Y-74.2	Display	04divbox	HANFORD CROSS SITE TRANSFER SYSTEM - PCU-2 - DIVERSION BOX 6241-A
			Display	06p3125b	HANFORD CROSS SITE TRANSFER SYSTEM - PCU-2 - BOOSTER PUMP P-3125B
			Derived Tags	Global	Derived Tag file
			Alarm Subsystem	Alarmed Tag	
PCU-2\PAL-3125B_ACK	Digital	BOOSTER PUMP LOW INLET PRESSURE Y-74.2 ACKNOWLEDGE	Alarm Acknowledge Bit Tag	PCU-2\PAL-3125B	
PCU-2\PAL-3125B1	Digital	PUMP P-3125B SEAL FAILURE [OFF = ALARM] Y76	Display	04divbox	HANFORD CROSS SITE TRANSFER SYSTEM - PCU-2 - DIVERSION BOX 6241-A
			Derived Tags	Global	Derived Tag file
			Alarm Subsystem	Alarmed Tag	
PCU-2\PAL-3125B1_ACK	Digital	PUMP P-3125B SEAL FAILURE [OFF = ALARM] Y76 ACKNOWLEDGE	Alarm Acknowledge Bit Tag	PCU-2\PAL-3125B1	
PCU-2\PAL-3125B2	Digital	PUMP P-3125B SEAL FAILURE [OFF = ALARM] Y76	Display	04divbox	HANFORD CROSS SITE TRANSFER SYSTEM - PCU-2 - DIVERSION BOX 6241-A
			Derived Tags	Global	Derived Tag file
			Alarm Subsystem	Alarmed Tag	
PCU-2\PAL-3125B2_ACK	Digital	PUMP P-3125B SEAL FAILURE [OFF = ALARM] Y76 ACKNOWLEDGE	Alarm Acknowledge Bit Tag	PCU-2\PAL-3125B2	
PCU-2\PCU2-SP-AI-8	Analog	SPARE ANALOG INPUT			
PCU-2\PCU2-SP-AI-8_A	Digital	PCU-2 INPUT ANALOG OVER OR UNDER RANGE ALARM			
PCU-2\PCU2-SP-AO-3	Analog	SPARE ANALOG OUTPUT			
PCU-2\PCU2-SP-AO-4	Analog	SPARE ANALOG OUTPUT			
PCU-2\PCU2-SP-I21-04	Digital	SPARE DIGITAL INPUT			
PCU-2\PCU2-SP-I21-05	Digital	SPARE DIGITAL INPUT			
PCU-2\PCU2-SP-I21-06	Digital	SPARE DIGITAL INPUT			
PCU-2\PCU2-SP-I21-07	Digital	SPARE DIGITAL INPUT			
PCU-2\PCU2-SP-I21-10	Digital	SPARE DIGITAL INPUT			
PCU-2\PCU2-SP-I21-11	Digital	SPARE DIGITAL INPUT			
PCU-2\PCU2-SP-I21-12	Digital	SPARE DIGITAL INPUT			
PCU-2\PCU2-SP-I21-13	Digital	SPARE DIGITAL INPUT			
PCU-2\PCU2-SP-I21-14	Digital	SPARE DIGITAL INPUT			
PCU-2\PCU2-SP-I21-15	Digital	SPARE DIGITAL INPUT			
PCU-2\PCU2-SP-I21-16	Digital	SPARE DIGITAL INPUT			
PCU-2\PCU2-SP-I21-17	Digital	SPARE DIGITAL INPUT			

Tag Name	Tag Type	Tag Description	Component Type	Component Name	Component Description
PCU-2\PCU2-SP-I23-14	Digital	SPARE DIGITAL INPUT			
PCU-2\PCU2-SP-I23-15	Digital	SPARE DIGITAL INPUT			
PCU-2\PCU2-SP-I23-16	Digital	SPARE DIGITAL INPUT			
PCU-2\PCU2-SP-I23-17	Digital	SPARE DIGITAL INPUT			
PCU-2\PCU2-SP-O35-15	Digital	SPARE DIGITAL OUTPUT			
PCU-2\PCU2-SP-O35-16	Digital	SPARE DIGITAL OUTPUT			
PCU-2\PCU2-SP-O35-17	Digital	SPARE DIGITAL OUTPUT			
PCU-2\PCU2-SP-O37-14	Digital	SPARE DIGITAL OUTPUT			
PCU-2\PCU2-SP-O37-15	Digital	SPARE DIGITAL OUTPUT			
PCU-2\PCU2-SP-O37-16	Digital	SPARE DIGITAL OUTPUT			
PCU-2\PCU2-SP-O37-17	Digital	SPARE DIGITAL OUTPUT			
PCU-2\PCU2-SP-RI-5	Analog	SPARE R.T.D. TEMP. INPUT			
PCU-2\PCU2-SP-RI-5_A	Digital	PCU-2 INPUT R.T.D. TEMP. OVER OR UNDER RANGE ALARM			
PCU-2\PCU2-SP-RI-6	Analog	SPARE R.T.D. TEMP. INPUT			
PCU-2\PCU2-SP-RI-6_A	Digital	PCU-2 INPUT R.T.D. TEMP. OVER OR UNDER RANGE ALARM			
PCU-2\PCU2-SP-RI-7	Analog	SPARE R.T.D. TEMP. INPUT			
PCU-2\PCU2-SP-RI-7_A	Digital	PCU-2 INPUT R.T.D. TEMP. OVER OR UNDER RANGE ALARM			
PCU-2\PCU2-SP-RI-8	Analog	SPARE R.T.D. TEMP. INPUT			
PCU-2\PCU2-SP-RI-8_A	Digital	PCU-2 INPUT R.T.D. TEMP. OVER OR UNDER RANGE ALARM			
PCU-2\PCU2-SP-TI-2	Analog	SPARE THERMOCOUPLE INPUT			
PCU-2\PCU2-SP-TI-2_A	Digital	PCU-2 INPUT THERMOCOUPLE OVER OR UNDER RANGE ALARM			
PCU-2\PCU2-SP-TI-4	Analog	SPARE THERMOCOUPLE INPUT			
PCU-2\PCU2-SP-TI-4_A	Digital	PCU-2 INPUT THERMOCOUPLE OVER OR UNDER RANGE ALARM			
PCU-2\PCU2-SP-TI-5	Analog	SPARE THERMOCOUPLE INPUT			
PCU-2\PCU2-SP-TI-5_A	Digital	PCU-2 INPUT THERMOCOUPLE OVER OR UNDER RANGE ALARM			
PCU-2\PCU2-SP-TI-6	Analog	SPARE THERMOCOUPLE INPUT			
PCU-2\PCU2-SP-TI-6_A	Digital	PCU-2 INPUT THERMOCOUPLE OVER OR UNDER RANGE ALARM			
PCU-2\PCU2-SP-TI-7	Analog	SPARE THERMOCOUPLE INPUT			
PCU-2\PCU2-SP-TI-7_A	Digital	PCU-2 INPUT THERMOCOUPLE OVER OR UNDER RANGE ALARM			
PCU-2\PCU2-SP-TI-8	Analog	SPARE THERMOCOUPLE INPUT			
PCU-2\PCU2-SP-TI-8_A	Digital	PCU-2 INPUT THERMOCOUPLE OVER OR UNDER RANGE ALARM			
PCU-2\PI-3125A	Analog	PUMP P-3125A INLET PRESSURE	Display	04divbox	HANFORD CROSS SITE TRANSFER SYSTEM - PCU-2 - DIVERSION BOX 6241-A
			Display	05p3125a	HANFORD CROSS SITE TRANSFER SYSTEM - PCU-2 - BOOSTER PUMP P-3125A
			Display	06p3125b	HANFORD CROSS SITE TRANSFER SYSTEM - PCU-2 - BOOSTER PUMP P-3125B
			Data Log Setup	Dlg_tst1	
			Data Log Setup	R_Transf	
PCU-2\PI-3125A_A	Digital	PCU-2 INPUT ANALOG OVER OR UNDER RANGE ALARM	Display	04divbox	HANFORD CROSS SITE TRANSFER SYSTEM - PCU-2 - DIVERSION BOX 6241-A
			Display	05p3125a	HANFORD CROSS SITE TRANSFER SYSTEM - PCU-2 - BOOSTER PUMP P-3125A
			Alarm Subsystem	Alarmed Tag	
PCU-2\PI-3125A_A_ACK	Digital	PCU-2 INPUT ANALOG OVER OR UNDER RANGE ALARM ACKNOWLEDGE	Alarm Acknowledge Bit Tag	PCU-2\PI-3125A_A	
PCU-2\PI-3125B	Analog	PUMP P-3125B INLET PRESSURE	Display	04divbox	HANFORD CROSS SITE TRANSFER SYSTEM - PCU-2 - DIVERSION BOX 6241-A
			Display	06p3125b	HANFORD CROSS SITE TRANSFER SYSTEM - PCU-2 - BOOSTER PUMP P-3125B
			Data Log Setup	Cross Site	
			Data Log Setup	Dlg_tst1	
			Data Log Setup	R_Transf	
PCU-2\PI-3125B_A	Digital	PCU-2 INPUT ANALOG OVER OR UNDER RANGE ALARM	Display	04divbox	HANFORD CROSS SITE TRANSFER SYSTEM - PCU-2 - DIVERSION BOX 6241-A
			Display	06p3125b	HANFORD CROSS SITE TRANSFER SYSTEM - PCU-2 - BOOSTER PUMP P-3125B
			Alarm Subsystem	Alarmed Tag	
PCU-2\PI-3125B_A_ACK	Digital	PCU-2 INPUT ANALOG OVER OR UNDER RANGE ALARM ACKNOWLEDGE	Alarm Acknowledge Bit Tag	PCU-2\PI-3125B_A	
PCU-2\PI-3125C	Analog	PUMP P-3125A OUTLET PRESSURE	Display	04divbox	HANFORD CROSS SITE TRANSFER SYSTEM - PCU-2 - DIVERSION BOX 6241-A
			Display	05p3125a	HANFORD CROSS SITE TRANSFER SYSTEM - PCU-2 - BOOSTER PUMP P-3125A

Tag Name	Tag Type	Tag Description	Component Type	Component Name	Component Description
			Display	Test	HANFORD CROSS SITE TRANSFER SYSTEM - TEST AND DEMONSTRATION DISPLAY
			Data Log Setup	Dlg_tst1	
			Data Log Setup	P3125	
			Data Log Setup	R_Transf	
PCU-2\PI-3125C_A	Digital	PCU-2 INPUT ANALOG OVER OR UNDER RANGE ALARM	Display	04divbox	HANFORD CROSS SITE TRANSFER SYSTEM - PCU-2 - DIVERSION BOX 6241-A
			Display	05p3125a	HANFORD CROSS SITE TRANSFER SYSTEM - PCU-2 - BOOSTER PUMP P-3125A
			Alarm Subsystem	Alarmed Tag	
PCU-2\PI-3125C_A_ACK	Digital	PCU-2 INPUT ANALOG OVER OR UNDER RANGE ALARM ACKNOWLEDGE	Alarm Acknowledge Bit Tag	PCU-2\PI-3125C_A	
PCU-2\PI-3125D	Analog	PUMP P-3125B OUTLET PRESSURE	Display	04divbox	HANFORD CROSS SITE TRANSFER SYSTEM - PCU-2 - DIVERSION BOX 6241-A
			Display	06p3125b	HANFORD CROSS SITE TRANSFER SYSTEM - PCU-2 - BOOSTER PUMP P-3125B
			Display	Test	HANFORD CROSS SITE TRANSFER SYSTEM - TEST AND DEMONSTRATION DISPLAY
			Data Log Setup	Dlg_tst1	
			Data Log Setup	P3125	
			Data Log Setup	R_Transf	
PCU-2\PI-3125D_A	Digital	PCU-2 INPUT ANALOG OVER OR UNDER RANGE ALARM	Display	04divbox	HANFORD CROSS SITE TRANSFER SYSTEM - PCU-2 - DIVERSION BOX 6241-A
			Display	06p3125b	HANFORD CROSS SITE TRANSFER SYSTEM - PCU-2 - BOOSTER PUMP P-3125B
			Alarm Subsystem	Alarmed Tag	
PCU-2\PI-3125D_A_ACK	Digital	PCU-2 INPUT ANALOG OVER OR UNDER RANGE ALARM ACKNOWLEDGE	Alarm Acknowledge Bit Tag	PCU-2\PI-3125D_A	
PCU-2\PI-3125E	Analog	LINE WT-SNL-3150 PRESSURE	Display	04divbox	HANFORD CROSS SITE TRANSFER SYSTEM - PCU-2 - DIVERSION BOX 6241-A
			Data Log Setup	Cross Site	
			Data Log Setup	Dlg_tst1	
PCU-2\PI-3125E_A	Digital	PCU-2 INPUT ANALOG OVER OR UNDER RANGE ALARM	Display	04divbox	HANFORD CROSS SITE TRANSFER SYSTEM - PCU-2 - DIVERSION BOX 6241-A
			Alarm Subsystem	Alarmed Tag	
PCU-2\PI-3125E_A_ACK	Digital	PCU-2 INPUT ANALOG OVER OR UNDER RANGE ALARM ACKNOWLEDGE	Alarm Acknowledge Bit Tag	PCU-2\PI-3125E_A	
PCU-2\PI-3173	Analog	VALVE SOV-3173A/B PRESSURE	Display	04divbox	HANFORD CROSS SITE TRANSFER SYSTEM - PCU-2 - DIVERSION BOX 6241-A
			Data Log Setup	Cross Site	
PCU-2\PI-3173_A	Digital	PCU-2 INPUT ANALOG OVER OR UNDER RANGE ALARM	Display	04divbox	HANFORD CROSS SITE TRANSFER SYSTEM - PCU-2 - DIVERSION BOX 6241-A
			Alarm Subsystem	Alarmed Tag	
PCU-2\PI-3173_A_ACK	Digital	PCU-2 INPUT ANALOG OVER OR UNDER RANGE ALARM ACKNOWLEDGE	Alarm Acknowledge Bit Tag	PCU-2\PI-3173_A	
PCU-2\PI-3182	Analog	VALVE SOV-3182A/B PRESSURE	Display	04divbox	HANFORD CROSS SITE TRANSFER SYSTEM - PCU-2 - DIVERSION BOX 6241-A
			Data Log Setup	Cross Site	
PCU-2\PI-3182_A	Digital	PCU-2 INPUT ANALOG OVER OR UNDER RANGE ALARM	Display	04divbox	HANFORD CROSS SITE TRANSFER SYSTEM - PCU-2 - DIVERSION BOX 6241-A
			Alarm Subsystem	Alarmed Tag	
PCU-2\PI-3182_A_ACK	Digital	PCU-2 INPUT ANALOG OVER OR UNDER RANGE ALARM ACKNOWLEDGE	Alarm Acknowledge Bit Tag	PCU-2\PI-3182_A	
PCU-2\PI-3183	Analog	VALVE SOV-3183A/B PRESSURE	Display	04divbox	HANFORD CROSS SITE TRANSFER SYSTEM - PCU-2 - DIVERSION BOX 6241-A
PCU-2\PI-3183_A	Digital	PCU-2 INPUT ANALOG OVER OR UNDER RANGE ALARM	Display	04divbox	HANFORD CROSS SITE TRANSFER SYSTEM - PCU-2 - DIVERSION BOX 6241-A
			Alarm Subsystem	Alarmed Tag	
PCU-2\PI-3183_A_ACK	Digital	PCU-2 INPUT ANALOG OVER OR UNDER RANGE ALARM ACKNOWLEDGE	Alarm Acknowledge Bit Tag	PCU-2\PI-3183_A	

Tag Name	Tag Type	Tag Description	Component Type	Component Name	Component Description
PCU-2\PID-3125-FR	Analog	PUMP P-3125 A/B OUTLET FLOW REFERENCE FROM OIT	Display	05p3125a	HANFORD CROSS SITE TRANSFER SYSTEM - PCU-2 - BOOSTER PUMP P-3125A
			Display	06p3125b	HANFORD CROSS SITE TRANSFER SYSTEM - PCU-2 - BOOSTER PUMP P-3125B
			Display	Pmp350pid	Transfer Pump Popup
PCU-2\PID-3125-KD	Analog	PUMP P-3125 A/B PID CONTROL DERIV. GAIN FROM OIT	Display	05p3125a	HANFORD CROSS SITE TRANSFER SYSTEM - PCU-2 - BOOSTER PUMP P-3125A
			Display	06p3125b	HANFORD CROSS SITE TRANSFER SYSTEM - PCU-2 - BOOSTER PUMP P-3125B
			Display	Pmp350pid	Transfer Pump Popup
PCU-2\PID-3125-KI	Analog	PUMP P-3125 A/B PID CONTROL INTEG. GAIN FROM OIT	Display	05p3125a	HANFORD CROSS SITE TRANSFER SYSTEM - PCU-2 - BOOSTER PUMP P-3125A
			Display	06p3125b	HANFORD CROSS SITE TRANSFER SYSTEM - PCU-2 - BOOSTER PUMP P-3125B
			Display	Pmp350pid	Transfer Pump Popup
PCU-2\PID-3125-KP	Analog	PUMP P-3125 A/B PID CONTROL PROP. GAIN FROM OIT	Display	05p3125a	HANFORD CROSS SITE TRANSFER SYSTEM - PCU-2 - BOOSTER PUMP P-3125A
			Display	06p3125b	HANFORD CROSS SITE TRANSFER SYSTEM - PCU-2 - BOOSTER PUMP P-3125B
			Display	Pmp350pid	Transfer Pump Popup
PCU-2\SI-3125A	Analog	MOTOR SPEED PUMP P-3125A	Display	05p3125a	HANFORD CROSS SITE TRANSFER SYSTEM - PCU-2 - BOOSTER PUMP P-3125A
			Display	06p3125b	HANFORD CROSS SITE TRANSFER SYSTEM - PCU-2 - BOOSTER PUMP P-3125B
			Display	Test	HANFORD CROSS SITE TRANSFER SYSTEM - TEST AND DEMONSTRATION DISPLAY
			Data Log Setup	Dlg_tst1	
			Data Log Setup	P3125	
PCU-2\SI-3125A_A	Digital	PCU-2 INPUT ANALOG OVER OR UNDER RANGE ALARM	Display	05p3125a	HANFORD CROSS SITE TRANSFER SYSTEM - PCU-2 - BOOSTER PUMP P-3125A
			Alarm Subsystem	Alarmed Tag	
PCU-2\SI-3125A_A_ACK	Digital	PCU-2 INPUT ANALOG OVER OR UNDER RANGE ALARM ACKNOWLEDGE	Alarm Acknowledge Bit Tag	PCU-2\SI-3125A_A	
PCU-2\SI-3125B	Analog	MOTOR SPEED PUMP P-3125B	Display	06p3125b	HANFORD CROSS SITE TRANSFER SYSTEM - PCU-2 - BOOSTER PUMP P-3125B
			Display	Test	HANFORD CROSS SITE TRANSFER SYSTEM - TEST AND DEMONSTRATION DISPLAY
			Data Log Setup	Dlg_tst1	
			Data Log Setup	P3125	
PCU-2\SI-3125B_A	Digital	PCU-2 INPUT ANALOG OVER OR UNDER RANGE ALARM	Display	06p3125b	HANFORD CROSS SITE TRANSFER SYSTEM - PCU-2 - BOOSTER PUMP P-3125B
			Alarm Subsystem	Alarmed Tag	
PCU-2\SI-3125B_A_ACK	Digital	PCU-2 INPUT ANALOG OVER OR UNDER RANGE ALARM ACKNOWLEDGE	Alarm Acknowledge Bit Tag	PCU-2\SI-3125B_A	
PCU-2\SOV-3125C1	Digital	OPEN VALVE SOV-3125C Y-84			
PCU-2\SOV-3125C2	Digital	CLOSE VALVE SOV-3125C Y-84			
PCU-2\SOV-3125D1	Digital	OPEN VALVE SOV-3125D Y-86			
PCU-2\SOV-3125D2	Digital	CLOSE VALVE SOV-3125D Y-86			
PCU-2\SOV-3125E1	Digital	OPEN VALVE SOV-3125E Y-83			
PCU-2\SOV-3125E2	Digital	CLOSE VALVE SOV-3125E Y-83			
PCU-2\SOV-3125G1	Digital	OPEN VALVE SOV-3125G Y-85			
PCU-2\SOV-3125G2	Digital	CLOSE VALVE SOV-3125G Y-85			
PCU-2\SOV-3163-1	Digital	OPEN VALVE SOV-3163 Y80-2			
PCU-2\SOV-3163-2	Digital	CLOSE VALVE SOV-3163 Y80-2			
PCU-2\SOV-3173A1	Digital	OPEN VALVE SOV-3173A Y87-1			
PCU-2\SOV-3173A2	Digital	CLOSE VALVE SOV-3173A Y87-1			
PCU-2\SOV-3173B1	Digital	OPEN VALVE SOV-3173B Y87-2			
PCU-2\SOV-3173B2	Digital	CLOSE VALVE SOV-3173B Y87-2			
PCU-2\SOV-3182A1	Digital	OPEN VALVE SOV-3182A Y71			
PCU-2\SOV-3182A2	Digital	CLOSE VALVE SOV-3182A Y71			
PCU-2\SOV-3182B1	Digital	OPEN VALVE SOV-3182B Y71			
PCU-2\SOV-3182B2	Digital	CLOSE VALVE SOV-3182B Y71			
PCU-2\SOV-3183A1	Digital	OPEN VALVE SOV-3183A Y71			
PCU-2\SOV-3183A2	Digital	CLOSE VALVE SOV-3183A Y71			
PCU-2\SOV-3183B1	Digital	OPEN VALVE SOV-3183B Y71			
PCU-2\SOV-3183B2	Digital	CLOSE VALVE SOV-3183B Y71			
PCU-2\SOV-3184-1	Digital	OPEN VALVE SOV-3184 Y71			
PCU-2\SOV-3184-2	Digital	CLOSE VALVE SOV-3184 Y71			

Tag Name	Tag Type	Tag Description	Component Type	Component Name	Component Description
PCU-2\TAH-3125A	Digital	PUMP P-3125A MOTOR WINDING TEMP. HIGH [OFF = ALARM] Y76	Display	04divbox	HANFORD CROSS SITE TRANSFER SYSTEM - PCU-2 - DIVERSION BOX 6241-A
			Derived Tags	Global	Derived Tag file
			Alarm Subsystem	Alarmed Tag	
PCU-2\TAH-3125A_ACK	Digital	PUMP P-3125A MOTOR WINDING TEMP. HIGH [OFF = ALARM] Y76 ACKNOWLEDGE	Alarm Acknowledge Bit Tag	PCU-2\TAH-3125A	
PCU-2\TAH-3125A1	Digital	PUMP P-3125A INBOARD BEARING HIGH TEMP. Y-76.1	Display	04divbox	HANFORD CROSS SITE TRANSFER SYSTEM - PCU-2 - DIVERSION BOX 6241-A
			Display	05p3125a	HANFORD CROSS SITE TRANSFER SYSTEM - PCU-2 - BOOSTER PUMP P-3125A
			Derived Tags	Global	Derived Tag file
			Alarm Subsystem	Alarmed Tag	
PCU-2\TAH-3125A1_ACK	Digital	PUMP P-3125A INBOARD BEARING HIGH TEMP. Y-76.1 ACKNOWLEDGE	Alarm Acknowledge Bit Tag	PCU-2\TAH-3125A1	
PCU-2\TAH-3125A2	Digital	PUMP P-3125A OUTBOARD BEARING HIGH TEMP. Y-76.1	Display	04divbox	HANFORD CROSS SITE TRANSFER SYSTEM - PCU-2 - DIVERSION BOX 6241-A
			Display	05p3125a	HANFORD CROSS SITE TRANSFER SYSTEM - PCU-2 - BOOSTER PUMP P-3125A
			Derived Tags	Global	Derived Tag file
			Alarm Subsystem	Alarmed Tag	
PCU-2\TAH-3125A2_ACK	Digital	PUMP P-3125A OUTBOARD BEARING HIGH TEMP. Y-76.1 ACKNOWLEDGE	Alarm Acknowledge Bit Tag	PCU-2\TAH-3125A2	
PCU-2\TAH-3125B	Digital	PUMP P-3125B MOTOR WINDING TEMP. HIGH [OFF = ALARM] Y76	Display	04divbox	HANFORD CROSS SITE TRANSFER SYSTEM - PCU-2 - DIVERSION BOX 6241-A
			Derived Tags	Global	Derived Tag file
			Alarm Subsystem	Alarmed Tag	
PCU-2\TAH-3125B_ACK	Digital	PUMP P-3125B MOTOR WINDING TEMP. HIGH [OFF = ALARM] Y76 ACKNOWLEDGE	Alarm Acknowledge Bit Tag	PCU-2\TAH-3125B	
PCU-2\TAH-3125B1	Digital	PUMP P-3125B INBOARD BEARING HIGH TEMP. Y-76.1	Display	04divbox	HANFORD CROSS SITE TRANSFER SYSTEM - PCU-2 - DIVERSION BOX 6241-A
			Display	06p3125b	HANFORD CROSS SITE TRANSFER SYSTEM - PCU-2 - BOOSTER PUMP P-3125B
			Derived Tags	Global	Derived Tag file
			Alarm Subsystem	Alarmed Tag	
PCU-2\TAH-3125B1_ACK	Digital	PUMP P-3125B INBOARD BEARING HIGH TEMP. Y-76.1 ACKNOWLEDGE	Alarm Acknowledge Bit Tag	PCU-2\TAH-3125B1	
PCU-2\TAH-3125B2	Digital	PUMP P-3125B OUTBOARD BEARING HIGH TEMP. Y-76.1	Display	04divbox	HANFORD CROSS SITE TRANSFER SYSTEM - PCU-2 - DIVERSION BOX 6241-A
			Display	06p3125b	HANFORD CROSS SITE TRANSFER SYSTEM - PCU-2 - BOOSTER PUMP P-3125B
			Derived Tags	Global	Derived Tag file
			Alarm Subsystem	Alarmed Tag	
PCU-2\TAH-3125B2_ACK	Digital	PUMP P-3125B OUTBOARD BEARING HIGH TEMP. Y-76.1 ACKNOWLEDGE	Alarm Acknowledge Bit Tag	PCU-2\TAH-3125B2	
PCU-2\TAH_CAB_PLC2	Digital	PLC-2 CABINET HIGH TEMPERATURE [OFF = ALARM]	Display	00Entry	TEST ENTRY
			Alarm Subsystem	Alarmed Tag	
PCU-2\TAH_CAB_PLC2_ACK	Digital	PLC-2 CABINET HIGH TEMPERATURE ACKNOWLEDGE	Alarm Acknowledge Bit Tag	PCU-2\TAH_CAB_PLC2	
PCU-2\TI-3125A	Analog	PUMP P-3125A/B OUTLET FLOW TEMPERATURE WT-SLL-3160	Display	04divbox	HANFORD CROSS SITE TRANSFER SYSTEM - PCU-2 - DIVERSION BOX 6241-A
			Display	05p3125a	HANFORD CROSS SITE TRANSFER SYSTEM - PCU-2 - BOOSTER PUMP P-3125A
			Display	06p3125b	HANFORD CROSS SITE TRANSFER SYSTEM - PCU-2 - BOOSTER PUMP P-3125B
PCU-2\TI-3125A_A	Digital	PCU-2 INPUT THERMOCOUPLE OVER OR UNDER RANGE ALARM	Display	04divbox	HANFORD CROSS SITE TRANSFER SYSTEM - PCU-2 - DIVERSION BOX 6241-A
			Display	05p3125a	HANFORD CROSS SITE TRANSFER SYSTEM - PCU-2 - BOOSTER PUMP P-3125A
			Display	06p3125b	HANFORD CROSS SITE TRANSFER SYSTEM - PCU-2 - BOOSTER PUMP P-3125B
			Alarm Subsystem	Alarmed Tag	

Tag Name	Tag Type	Tag Description	Component Type	Component Name	Component Description
PCU-2\TI-3125A_A_ACK	Digital	PCU-2 INPUT THERMOCOUPLE OVER OR UNDER RANGE ALARM ACKNOWLEDGE	Alarm Acknowledge Bit Tag	PCU-2\TI-3125A_A	
PCU-2\TI-3125A1	Analog	PUMP P-3125A MOTOR BEARING TEMPERATURE	Display	05p3125a	HANFORD CROSS SITE TRANSFER SYSTEM - PCU-2 - BOOSTER PUMP P-3125A
			Display	06p3125b	HANFORD CROSS SITE TRANSFER SYSTEM - PCU-2 - BOOSTER PUMP P-3125B
			Data Log Setup	R_Transf	
PCU-2\TI-3125A1_A	Digital	PCU-2 INPUT R.T.D. TEMP. OVER OR UNDER RANGE ALARM	Display	05p3125a	HANFORD CROSS SITE TRANSFER SYSTEM - PCU-2 - BOOSTER PUMP P-3125A
			Alarm Subsystem	Alarmed Tag	
PCU-2\TI-3125A1_A_ACK	Digital	PCU-2 INPUT R.T.D. TEMP. OVER OR UNDER RANGE ALARM ACKNOWLEDGE	Alarm Acknowledge Bit Tag	PCU-2\TI-3125A1_A	
PCU-2\TI-3125A2	Analog	PUMP P-3125A MOTOR BEARING TEMPERATURE	Display	05p3125a	HANFORD CROSS SITE TRANSFER SYSTEM - PCU-2 - BOOSTER PUMP P-3125A
			Display	06p3125b	HANFORD CROSS SITE TRANSFER SYSTEM - PCU-2 - BOOSTER PUMP P-3125B
PCU-2\TI-3125A2_A	Digital	PCU-2 INPUT R.T.D. TEMP. OVER OR UNDER RANGE ALARM	Display	05p3125a	HANFORD CROSS SITE TRANSFER SYSTEM - PCU-2 - BOOSTER PUMP P-3125A
			Alarm Subsystem	Alarmed Tag	
PCU-2\TI-3125A2_A_ACK	Digital	PCU-2 INPUT R.T.D. TEMP. OVER OR UNDER RANGE ALARM ACKNOWLEDGE	Alarm Acknowledge Bit Tag	PCU-2\TI-3125A2_A	
PCU-2\TI-3125B	Analog	LINE WT-SNL-3150 TEMPERATURE	Display	04divbox	HANFORD CROSS SITE TRANSFER SYSTEM - PCU-2 - DIVERSION BOX 6241-A
			Data Log Setup	Cross Site	
PCU-2\TI-3125B_A	Digital	PCU-2 INPUT THERMOCOUPLE OVER OR UNDER RANGE ALARM	Display	04divbox	HANFORD CROSS SITE TRANSFER SYSTEM - PCU-2 - DIVERSION BOX 6241-A
			Alarm Subsystem	Alarmed Tag	
PCU-2\TI-3125B_A_ACK	Digital	PCU-2 INPUT THERMOCOUPLE OVER OR UNDER RANGE ALARM ACKNOWLEDGE	Alarm Acknowledge Bit Tag	PCU-2\TI-3125B_A	
PCU-2\TI-3125B1	Analog	PUMP P-3125B MOTOR BEARING TEMPERATURE	Display	06p3125b	HANFORD CROSS SITE TRANSFER SYSTEM - PCU-2 - BOOSTER PUMP P-3125B
			Data Log Setup	R_Transf	
PCU-2\TI-3125B1_A	Digital	PCU-2 INPUT R.T.D. TEMP. OVER OR UNDER RANGE ALARM	Display	06p3125b	HANFORD CROSS SITE TRANSFER SYSTEM - PCU-2 - BOOSTER PUMP P-3125B
			Alarm Subsystem	Alarmed Tag	
PCU-2\TI-3125B1_A_ACK	Digital	PCU-2 INPUT R.T.D. TEMP. OVER OR UNDER RANGE ALARM ACKNOWLEDGE	Alarm Acknowledge Bit Tag	PCU-2\TI-3125B1_A	
PCU-2\TI-3125B2	Analog	PUMP P-3125B MOTOR BEARING TEMPERATURE	Display	06p3125b	HANFORD CROSS SITE TRANSFER SYSTEM - PCU-2 - BOOSTER PUMP P-3125B
PCU-2\TI-3125B2_A	Digital	PCU-2 INPUT R.T.D. TEMP. OVER OR UNDER RANGE ALARM	Display	06p3125b	HANFORD CROSS SITE TRANSFER SYSTEM - PCU-2 - BOOSTER PUMP P-3125B
			Alarm Subsystem	Alarmed Tag	
PCU-2\TI-3125B2_A_ACK	Digital	PCU-2 INPUT R.T.D. TEMP. OVER OR UNDER RANGE ALARM ACKNOWLEDGE	Alarm Acknowledge Bit Tag	PCU-2\TI-3125B2_A	
PCU-2\VAH-3125A1	Digital	PUMP P-3125A HIGH MOTOR VIBRATION Y-76.1	Display	04divbox	HANFORD CROSS SITE TRANSFER SYSTEM - PCU-2 - DIVERSION BOX 6241-A
			Display	05p3125a	HANFORD CROSS SITE TRANSFER SYSTEM - PCU-2 - BOOSTER PUMP P-3125A
			Derived Tags	Global	Derived Tag file
			Alarm Subsystem	Alarmed Tag	
PCU-2\VAH-3125A1_ACK	Digital	PUMP P-3125A HIGH MOTOR VIBRATION Y-76.1 ACKNOWLEDGE	Alarm Acknowledge Bit Tag	PCU-2\VAH-3125A1	
PCU-2\VAH-3125A2	Digital	PUMP P-3125A HIGH MOTOR VIBRATION Y-76.1	Display	04divbox	HANFORD CROSS SITE TRANSFER SYSTEM - PCU-2 - DIVERSION BOX 6241-A
			Display	05p3125a	HANFORD CROSS SITE TRANSFER SYSTEM - PCU-2 - BOOSTER PUMP P-3125A
			Derived Tags	Global	Derived Tag file
			Alarm Subsystem	Alarmed Tag	
PCU-2\VAH-3125A2_ACK	Digital	PUMP P-3125A HIGH MOTOR VIBRATION Y-76.1 ACKNOWLEDGE	Alarm Acknowledge Bit Tag	PCU-2\VAH-3125A2	

Tag Name	Tag Type	Tag Description	Component Type	Component Name	Component Description
PCU-2\VAH-3125B1	Digital	PUMP P-3125B HIGH MOTOR VIBRATION Y-76.1	Display	04divbox	HANFORD CROSS SITE TRANSFER SYSTEM - PCU-2 - DIVERSION BOX 6241-A
			Display	06p3125b	HANFORD CROSS SITE TRANSFER SYSTEM - PCU-2 - BOOSTER PUMP P-3125B
			Derived Tags	Global	Derived Tag file
			Alarm Subsystem	Alarmed Tag	
PCU-2\VAH-3125B1_ACK	Digital	PUMP P-3125B HIGH MOTOR VIBRATION Y-76.1 ACKNOWLEDGE	Alarm Acknowledge Bit Tag	PCU-2\VAH-3125B1	
PCU-2\VAH-3125B2	Digital	PUMP P-3125B HIGH MOTOR VIBRATION Y-76.1	Display	04divbox	HANFORD CROSS SITE TRANSFER SYSTEM - PCU-2 - DIVERSION BOX 6241-A
			Display	06p3125b	HANFORD CROSS SITE TRANSFER SYSTEM - PCU-2 - BOOSTER PUMP P-3125B
			Derived Tags	Global	Derived Tag file
			Alarm Subsystem	Alarmed Tag	
PCU-2\VAH-3125B2_ACK	Digital	PUMP P-3125B HIGH MOTOR VIBRATION Y-76.1 ACKNOWLEDGE	Alarm Acknowledge Bit Tag	PCU-2\VAH-3125B2	
PCU-2\VI-3125A1	Analog	PUMP P-3125A BEARING VIBRATION	Display	05p3125a	HANFORD CROSS SITE TRANSFER SYSTEM - PCU-2 - BOOSTER PUMP P-3125A
			Display	Test	HANFORD CROSS SITE TRANSFER SYSTEM - TEST AND DEMONSTRATION DISPLAY
			Data Log Setup	Dlg_tst1	
			Data Log Setup	P3125	
PCU-2\VI-3125A1_A	Digital	PCU-2 INPUT ANALOG OVER OR UNDER RANGE ALARM	Display	05p3125a	HANFORD CROSS SITE TRANSFER SYSTEM - PCU-2 - BOOSTER PUMP P-3125A
			Alarm Subsystem	Alarmed Tag	
PCU-2\VI-3125A1_A_ACK	Digital	PCU-2 INPUT ANALOG OVER OR UNDER RANGE ALARM ACKNOWLEDGE	Alarm Acknowledge Bit Tag	PCU-2\VI-3125A1_A	
PCU-2\VI-3125A2	Analog	PUMP P-3125A BEARING VIBRATION	Display	05p3125a	HANFORD CROSS SITE TRANSFER SYSTEM - PCU-2 - BOOSTER PUMP P-3125A
			Display	Test	HANFORD CROSS SITE TRANSFER SYSTEM - TEST AND DEMONSTRATION DISPLAY
			Data Log Setup	Dlg_tst1	
			Data Log Setup	P3125	
PCU-2\VI-3125A2_A	Digital	PCU-2 INPUT ANALOG OVER OR UNDER RANGE ALARM	Display	05p3125a	HANFORD CROSS SITE TRANSFER SYSTEM - PCU-2 - BOOSTER PUMP P-3125A
			Alarm Subsystem	Alarmed Tag	
PCU-2\VI-3125A2_A_ACK	Digital	PCU-2 INPUT ANALOG OVER OR UNDER RANGE ALARM ACKNOWLEDGE	Alarm Acknowledge Bit Tag	PCU-2\VI-3125A2_A	
PCU-2\VI-3125B1	Analog	PUMP P-3125B BEARING VIBRATION	Display	06p3125b	HANFORD CROSS SITE TRANSFER SYSTEM - PCU-2 - BOOSTER PUMP P-3125B
			Display	Test	HANFORD CROSS SITE TRANSFER SYSTEM - TEST AND DEMONSTRATION DISPLAY
			Data Log Setup	Dlg_tst1	
			Data Log Setup	P3125	
PCU-2\VI-3125B1_A	Digital	PCU-2 INPUT ANALOG OVER OR UNDER RANGE ALARM	Display	06p3125b	HANFORD CROSS SITE TRANSFER SYSTEM - PCU-2 - BOOSTER PUMP P-3125B
			Alarm Subsystem	Alarmed Tag	
PCU-2\VI-3125B1_A_ACK	Digital	PCU-2 INPUT ANALOG OVER OR UNDER RANGE ALARM ACKNOWLEDGE	Alarm Acknowledge Bit Tag	PCU-2\VI-3125B1_A	
PCU-2\VI-3125B2	Analog	PUMP P-3125B BEARING VIBRATION	Display	06p3125b	HANFORD CROSS SITE TRANSFER SYSTEM - PCU-2 - BOOSTER PUMP P-3125B
			Display	Test	HANFORD CROSS SITE TRANSFER SYSTEM - TEST AND DEMONSTRATION DISPLAY
			Data Log Setup	Dlg_tst1	
			Data Log Setup	P3125	
PCU-2\VI-3125B2_A	Digital	PCU-2 INPUT ANALOG OVER OR UNDER RANGE ALARM	Display	06p3125b	HANFORD CROSS SITE TRANSFER SYSTEM - PCU-2 - BOOSTER PUMP P-3125B
			Alarm Subsystem	Alarmed Tag	
PCU-2\VI-3125B2_A_ACK	Digital	PCU-2 INPUT ANALOG OVER OR UNDER RANGE ALARM ACKNOWLEDGE	Alarm Acknowledge Bit Tag	PCU-2\VI-3125B2_A	

Tag Name	Tag Type	Tag Description	Component Type	Component Name	Component Description
PCU-2\XA-3125A	Digital	BOOSTER PUMP P-3125A FAILURE Y-74.1	Display	00Entry	TEST ENTRY
			Display	04divbox	HANFORD CROSS SITE TRANSFER SYSTEM - PCU-2 - DIVERSION BOX 6241-A
			Display	05p3125a	HANFORD CROSS SITE TRANSFER SYSTEM - PCU-2 - BOOSTER PUMP P-3125A
			Derived Tags	Global	Derived Tag file
			Alarm Subsystem	Alarmed Tag	
PCU-2\XA-3125A_ACK	Digital	BOOSTER PUMP P-3125A FAILURE Y-74.1 ACKNOWLEDGE	Alarm Acknowledge Bit Tag	PCU-2\XA-3125A	
PCU-2\XA-3125B	Digital	BOOSTER PUMP P-3125B FAILURE Y-74.2	Display	00Entry	TEST ENTRY
			Display	04divbox	HANFORD CROSS SITE TRANSFER SYSTEM - PCU-2 - DIVERSION BOX 6241-A
			Display	06p3125b	HANFORD CROSS SITE TRANSFER SYSTEM - PCU-2 - BOOSTER PUMP P-3125B
			Derived Tags	Global	Derived Tag file
			Alarm Subsystem	Alarmed Tag	
PCU-2\XA-3125B_ACK	Digital	BOOSTER PUMP P-3125B FAILURE Y-74.2 ACKNOWLEDGE	Alarm Acknowledge Bit Tag	PCU-2\XA-3125B	
PCU-2\YA-3101A	Digital	ENCASEMENT RUPTURE DISK ACTIVATED [OFF = ALARM] OIT	Alarm Subsystem	Alarmed Tag	
PCU-2\YA-3101A_ACK	Digital	ENCASEMENT RUPTURE DISK ACTIVATED [OFF = ALARM] OIT ACKNOWLEDGE	Alarm Acknowledge Bit Tag	PCU-2\YA-3101A	
PCU-2\YA-3101B	Digital	ENCASEMENT RUPTURE DISK ACTIVATED [OFF = ALARM] OIT	Alarm Subsystem	Alarmed Tag	
PCU-2\YA-3101B_ACK	Digital	ENCASEMENT RUPTURE DISK ACTIVATED [OFF = ALARM] OIT ACKNOWLEDGE	Alarm Acknowledge Bit Tag	PCU-2\YA-3101B	
PCU-2\YA-3101C	Digital	ENCASEMENT RUPTURE DISK ACTIVATED [OFF = ALARM] OIT	Alarm Subsystem	Alarmed Tag	
PCU-2\YA-3101C_ACK	Digital	ENCASEMENT RUPTURE DISK ACTIVATED [OFF = ALARM] OIT ACKNOWLEDGE	Alarm Acknowledge Bit Tag	PCU-2\YA-3101C	
PCU-2\YA-3101D	Digital	ENCASEMENT RUPTURE DISK ACTIVATED [OFF = ALARM] OIT	Alarm Subsystem	Alarmed Tag	
PCU-2\YA-3101D_ACK	Digital	ENCASEMENT RUPTURE DISK ACTIVATED [OFF = ALARM] OIT ACKNOWLEDGE	Alarm Acknowledge Bit Tag	PCU-2\YA-3101D	
PCU-2\YA-3101E	Digital	ENCASEMENT RUPTURE DISK ACTIVATED [OFF = ALARM] OIT	Alarm Subsystem	Alarmed Tag	
PCU-2\YA-3101E_ACK	Digital	ENCASEMENT RUPTURE DISK ACTIVATED [OFF = ALARM] OIT ACKNOWLEDGE	Alarm Acknowledge Bit Tag	PCU-2\YA-3101E	
PCU-2\YA-3101F	Digital	ENCASEMENT RUPTURE DISK ACTIVATED [OFF = ALARM] OIT	Alarm Subsystem	Alarmed Tag	
PCU-2\YA-3101F_ACK	Digital	ENCASEMENT RUPTURE DISK ACTIVATED [OFF = ALARM] OIT ACKNOWLEDGE	Alarm Acknowledge Bit Tag	PCU-2\YA-3101F	
PCU-2\YA-3101G	Digital	ENCASEMENT RUPTURE DISK ACTIVATED [OFF = ALARM] OIT	Alarm Subsystem	Alarmed Tag	
PCU-2\YA-3101G_ACK	Digital	ENCASEMENT RUPTURE DISK ACTIVATED [OFF = ALARM] OIT ACKNOWLEDGE	Alarm Acknowledge Bit Tag	PCU-2\YA-3101G	
PCU-2\YA-3101H	Digital	ENCASEMENT RUPTURE DISK ACTIVATED [OFF = ALARM] OIT	Alarm Subsystem	Alarmed Tag	
PCU-2\YA-3101H_ACK	Digital	ENCASEMENT RUPTURE DISK ACTIVATED [OFF = ALARM] OIT ACKNOWLEDGE	Alarm Acknowledge Bit Tag	PCU-2\YA-3101H	
PCU-2\YL-3125A3	Digital	LOCAL/REMOTE STATUS FOR P-3125A [ON = REMOTE] OIT	Display	00Entry	TEST ENTRY
			Display	05p3125a	HANFORD CROSS SITE TRANSFER SYSTEM - PCU-2 - BOOSTER PUMP P-3125A
PCU-2\YL-3125B3	Digital	LOCAL/REMOTE STATUS FOR P-3125B [ON = REMOTE] OIT	Display	00Entry	TEST ENTRY
			Display	06p3125b	HANFORD CROSS SITE TRANSFER SYSTEM - PCU-2 - BOOSTER PUMP P-3125B
PCU-2\ZA-3125C	Digital	VALVE SOV-3125C POSITION SWITCH FAILURE Y-84.1	Display	04divbox	HANFORD CROSS SITE TRANSFER SYSTEM - PCU-2 - DIVERSION BOX 6241-A
			Parameters	S3125c	
			Derived Tags	Global	Derived Tag file
			Alarm Subsystem	Alarmed Tag	
PCU-2\ZA-3125C_ACK	Digital	VALVE SOV-3125C POSITION SWITCH FAILURE Y-84.1 ACKNOWLEDGE	Alarm Acknowledge Bit Tag	PCU-2\ZA-3125C	
PCU-2\ZA-3125C1	Digital	VALVE SOV-3125C FAILED TO OPEN Y-84.1	Display	04divbox	HANFORD CROSS SITE TRANSFER SYSTEM - PCU-2 - DIVERSION BOX 6241-A
			Parameters	S3125c	

Tag Name	Tag Type	Tag Description	Component Type	Component Name	Component Description
			Derived Tags	Global	Derived Tag file
			Alarm Subsystem	Alarmed Tag	
PCU-2\ZA-3125C1_ACK	Digital	VALVE SOV-3125C FAILED TO OPEN Y-84.1 ACKNOWLEDGE	Alarm Acknowledge Bit Tag	PCU-2\ZA-3125C1	
PCU-2\ZA-3125C2	Digital	VALVE SOV-3125C FAILED TO CLOSE Y-84.1	Display	04divbox	HANFORD CROSS SITE TRANSFER SYSTEM - PCU-2 - DIVERSION BOX 6241-A
			Parameters	S3125c	
			Derived Tags	Global	Derived Tag file
			Alarm Subsystem	Alarmed Tag	
PCU-2\ZA-3125C2_ACK	Digital	VALVE SOV-3125C FAILED TO CLOSE Y-84.1 ACKNOWLEDGE	Alarm Acknowledge Bit Tag	PCU-2\ZA-3125C2	
PCU-2\ZA-3125D	Digital	VALVE SOV-3125D POSITION SWITCH FAILURE Y-86.1	Display	04divbox	HANFORD CROSS SITE TRANSFER SYSTEM - PCU-2 - DIVERSION BOX 6241-A
			Parameters	S3125d	
			Derived Tags	Global	Derived Tag file
			Alarm Subsystem	Alarmed Tag	
PCU-2\ZA-3125D_ACK	Digital	VALVE SOV-3125D POSITION SWITCH FAILURE Y-86.1 ACKNOWLEDGE	Alarm Acknowledge Bit Tag	PCU-2\ZA-3125D	
PCU-2\ZA-3125D1	Digital	VALVE SOV-3125D FAILED TO OPEN Y-86.1	Display	04divbox	HANFORD CROSS SITE TRANSFER SYSTEM - PCU-2 - DIVERSION BOX 6241-A
			Parameters	S3125d	
			Derived Tags	Global	Derived Tag file
			Alarm Subsystem	Alarmed Tag	
PCU-2\ZA-3125D1_ACK	Digital	VALVE SOV-3125D FAILED TO OPEN Y-86.1 ACKNOWLEDGE	Alarm Acknowledge Bit Tag	PCU-2\ZA-3125D1	
PCU-2\ZA-3125D2	Digital	VALVE SOV-3125D FAILED TO CLOSE Y-86.1	Display	04divbox	HANFORD CROSS SITE TRANSFER SYSTEM - PCU-2 - DIVERSION BOX 6241-A
			Parameters	S3125d	
			Derived Tags	Global	Derived Tag file
			Alarm Subsystem	Alarmed Tag	
PCU-2\ZA-3125D2_ACK	Digital	VALVE SOV-3125D FAILED TO CLOSE Y-86.1 ACKNOWLEDGE	Alarm Acknowledge Bit Tag	PCU-2\ZA-3125D2	
PCU-2\ZA-3125E	Digital	VALVE SOV-3125E POSITION SWITCH FAILURE Y-83.1	Display	04divbox	HANFORD CROSS SITE TRANSFER SYSTEM - PCU-2 - DIVERSION BOX 6241-A
			Parameters	S3125e	
			Derived Tags	Global	Derived Tag file
			Alarm Subsystem	Alarmed Tag	
PCU-2\ZA-3125E_ACK	Digital	VALVE SOV-3125E POSITION SWITCH FAILURE Y-83.1 ACKNOWLEDGE	Alarm Acknowledge Bit Tag	PCU-2\ZA-3125E	
PCU-2\ZA-3125E1	Digital	VALVE SOV-3125E FAILED TO OPEN Y-83.1	Display	04divbox	HANFORD CROSS SITE TRANSFER SYSTEM - PCU-2 - DIVERSION BOX 6241-A
			Parameters	S3125e	
			Derived Tags	Global	Derived Tag file
			Alarm Subsystem	Alarmed Tag	
PCU-2\ZA-3125E1_ACK	Digital	VALVE SOV-3125E FAILED TO OPEN Y-83.1 ACKNOWLEDGE	Alarm Acknowledge Bit Tag	PCU-2\ZA-3125E1	
PCU-2\ZA-3125E2	Digital	VALVE SOV-3125E FAILED TO CLOSE Y-83.1	Display	04divbox	HANFORD CROSS SITE TRANSFER SYSTEM - PCU-2 - DIVERSION BOX 6241-A
			Parameters	S3125e	
			Derived Tags	Global	Derived Tag file
			Alarm Subsystem	Alarmed Tag	
PCU-2\ZA-3125E2_ACK	Digital	VALVE SOV-3125E FAILED TO CLOSE Y-83.1 ACKNOWLEDGE	Alarm Acknowledge Bit Tag	PCU-2\ZA-3125E2	
PCU-2\ZA-3125G	Digital	VALVE SOV-3125G POSITION SWITCH FAILURE Y-85.1	Display	04divbox	HANFORD CROSS SITE TRANSFER SYSTEM - PCU-2 - DIVERSION BOX 6241-A
			Parameters	S3125g	
			Derived Tags	Global	Derived Tag file
			Alarm Subsystem	Alarmed Tag	
PCU-2\ZA-3125G_ACK	Digital	VALVE SOV-3125G POSITION SWITCH FAILURE Y-85.1 ACKNOWLEDGE	Alarm Acknowledge Bit Tag	PCU-2\ZA-3125G	
PCU-2\ZA-3125G1	Digital	VALVE SOV-3125G FAILED TO OPEN Y-85.1	Display	04divbox	HANFORD CROSS SITE TRANSFER SYSTEM - PCU-2 - DIVERSION BOX 6241-A
			Parameters	S3125g	
			Derived Tags	Global	Derived Tag file
			Alarm Subsystem	Alarmed Tag	
PCU-2\ZA-3125G1_ACK	Digital	VALVE SOV-3125G FAILED TO OPEN Y-85.1 ACKNOWLEDGE	Alarm Acknowledge Bit Tag	PCU-2\ZA-3125G1	
PCU-2\ZA-3125G2	Digital	VALVE SOV-3125G FAILED TO CLOSE Y-85.1	Display	04divbox	HANFORD CROSS SITE TRANSFER SYSTEM - PCU-2 - DIVERSION BOX 6241-A
			Parameters	S3125g	
			Derived Tags	Global	Derived Tag file
			Alarm Subsystem	Alarmed Tag	

Tag Name	Tag Type	Tag Description	Component Type	Component Name	Component Description
PCU-2\ZA-3125G2_ACK	Digital	VALVE SOV-3125G FAILED TO CLOSE Y-85.1 ACKNOWLEDGE	Alarm Acknowledge Bit Tag	PCU-2\ZA-3125G2	
PCU-2\ZA-3156A	Digital	VALVE MOV-3156A POSITION SWITCH FAILURE Y-89.1	Display	04divbox	HANFORD CROSS SITE TRANSFER SYSTEM - PCU-2 - DIVERSION BOX 6241-A
			Parameters	M3156a	
			Alarm Subsystem	Alarmed Tag	
PCU-2\ZA-3156A_ACK	Digital	VALVE MOV-3156A POSITION SWITCH FAILURE Y-89.1 ACKNOWLEDGE	Alarm Acknowledge Bit Tag	PCU-2\ZA-3156A	
PCU-2\ZA-3156A1	Digital	VALVE MOV-3156A FAILED TO OPEN Y-89.1	Display	04divbox	HANFORD CROSS SITE TRANSFER SYSTEM - PCU-2 - DIVERSION BOX 6241-A
			Parameters	M3156a	
			Alarm Subsystem	Alarmed Tag	
PCU-2\ZA-3156A1_ACK	Digital	VALVE MOV-3156A FAILED TO OPEN Y-89.1 ACKNOWLEDGE	Alarm Acknowledge Bit Tag	PCU-2\ZA-3156A1	
PCU-2\ZA-3156A2	Digital	VALVE MOV-3156A FAILED TO CLOSE Y-89.1	Display	04divbox	HANFORD CROSS SITE TRANSFER SYSTEM - PCU-2 - DIVERSION BOX 6241-A
			Parameters	M3156a	
			Alarm Subsystem	Alarmed Tag	
PCU-2\ZA-3156A2_ACK	Digital	VALVE MOV-3156A FAILED TO CLOSE Y-89.1 ACKNOWLEDGE	Alarm Acknowledge Bit Tag	PCU-2\ZA-3156A2	
PCU-2\ZA-3156B	Digital	VALVE MOV-3156B POSITION SWITCH FAILURE Y-89.2	Display	04divbox	HANFORD CROSS SITE TRANSFER SYSTEM - PCU-2 - DIVERSION BOX 6241-A
			Parameters	M3156b	
			Alarm Subsystem	Alarmed Tag	
PCU-2\ZA-3156B_ACK	Digital	VALVE MOV-3156B POSITION SWITCH FAILURE Y-89.2 ACKNOWLEDGE	Alarm Acknowledge Bit Tag	PCU-2\ZA-3156B	
PCU-2\ZA-3156B1	Digital	VALVE MOV-3156B FAILED TO OPEN Y-89.2	Display	04divbox	HANFORD CROSS SITE TRANSFER SYSTEM - PCU-2 - DIVERSION BOX 6241-A
			Parameters	M3156b	
			Alarm Subsystem	Alarmed Tag	
PCU-2\ZA-3156B1_ACK	Digital	VALVE MOV-3156B FAILED TO OPEN Y-89.2 ACKNOWLEDGE	Alarm Acknowledge Bit Tag	PCU-2\ZA-3156B1	
PCU-2\ZA-3156B2	Digital	VALVE MOV-3156B FAILED TO CLOSE Y-89.2	Display	04divbox	HANFORD CROSS SITE TRANSFER SYSTEM - PCU-2 - DIVERSION BOX 6241-A
			Parameters	M3156b	
			Alarm Subsystem	Alarmed Tag	
PCU-2\ZA-3156B2_ACK	Digital	VALVE MOV-3156B FAILED TO CLOSE Y-89.2 ACKNOWLEDGE	Alarm Acknowledge Bit Tag	PCU-2\ZA-3156B2	
PCU-2\ZA-3173A	Digital	VALVE SOV-3173A POSITION SWITCH FAILURE Y-87.1	Display	04divbox	HANFORD CROSS SITE TRANSFER SYSTEM - PCU-2 - DIVERSION BOX 6241-A
			Parameters	S3173a	
			Derived Tags	Global	Derived Tag file
			Alarm Subsystem	Alarmed Tag	
PCU-2\ZA-3173A_ACK	Digital	VALVE SOV-3173A POSITION SWITCH FAILURE Y-87.1 ACKNOWLEDGE	Alarm Acknowledge Bit Tag	PCU-2\ZA-3173A	
PCU-2\ZA-3173A1	Digital	VALVE SOV-3173A FAILED TO OPEN Y-87.1	Display	04divbox	HANFORD CROSS SITE TRANSFER SYSTEM - PCU-2 - DIVERSION BOX 6241-A
			Parameters	S3173a	
			Derived Tags	Global	Derived Tag file
			Alarm Subsystem	Alarmed Tag	
PCU-2\ZA-3173A1_ACK	Digital	VALVE SOV-3173A FAILED TO OPEN Y-87.1 ACKNOWLEDGE	Alarm Acknowledge Bit Tag	PCU-2\ZA-3173A1	
PCU-2\ZA-3173A2	Digital	VALVE SOV-3173A FAILED TO CLOSE Y-87.1	Display	04divbox	HANFORD CROSS SITE TRANSFER SYSTEM - PCU-2 - DIVERSION BOX 6241-A
			Parameters	S3173a	
			Derived Tags	Global	Derived Tag file
			Alarm Subsystem	Alarmed Tag	
PCU-2\ZA-3173A2_ACK	Digital	VALVE SOV-3173A FAILED TO CLOSE Y-87.1 ACKNOWLEDGE	Alarm Acknowledge Bit Tag	PCU-2\ZA-3173A2	
PCU-2\ZA-3173B	Digital	VALVE SOV-3173B POSITION SWITCH FAILURE Y-87.2	Display	04divbox	HANFORD CROSS SITE TRANSFER SYSTEM - PCU-2 - DIVERSION BOX 6241-A
			Parameters	S3173b	
			Derived Tags	Global	Derived Tag file
			Alarm Subsystem	Alarmed Tag	
PCU-2\ZA-3173B_ACK	Digital	VALVE SOV-3173B POSITION SWITCH FAILURE Y-87.2 ACKNOWLEDGE	Alarm Acknowledge Bit Tag	PCU-2\ZA-3173B	
PCU-2\ZA-3173B1	Digital	VALVE SOV-3173B FAILED TO OPEN Y-87.2	Display	04divbox	HANFORD CROSS SITE TRANSFER SYSTEM - PCU-2 - DIVERSION BOX 6241-A
			Parameters	S3173b	

Tag Name	Tag Type	Tag Description	Component Type	Component Name	Component Description
			Derived Tags	Global	Derived Tag file
			Alarm Subsystem	Alarmed Tag	
PCU-2\ZA-3173B1_ACK	Digital	VALVE SOV-3173B FAILED TO OPEN Y-87.2 ACKNOWLEDGE	Alarm Acknowledge Bit Tag	PCU-2\ZA-3173B1	
PCU-2\ZA-3173B2	Digital	VALVE SOV-3173B FAILED TO CLOSE Y-87.2	Display	04divbox	HANFORD CROSS SITE TRANSFER SYSTEM - PCU-2 - DIVERSION BOX 6241-A
			Parameters	S3173b	
			Derived Tags	Global	Derived Tag file
			Alarm Subsystem	Alarmed Tag	
PCU-2\ZA-3173B2_ACK	Digital	VALVE SOV-3173B FAILED TO CLOSE Y-87.2 ACKNOWLEDGE	Alarm Acknowledge Bit Tag	PCU-2\ZA-3173B2	
PCU-2\ZA-3182A	Digital	VALVE POSITION SWITCH FAILURE Y-71.1	Display	04divbox	HANFORD CROSS SITE TRANSFER SYSTEM - PCU-2 - DIVERSION BOX 6241-A
			Parameters	S3182a	
			Derived Tags	Global	Derived Tag file
			Alarm Subsystem	Alarmed Tag	
PCU-2\ZA-3182A_ACK	Digital	VALVE POSITION SWITCH FAILURE Y-71.1 ACKNOWLEDGE	Alarm Acknowledge Bit Tag	PCU-2\ZA-3182A	
PCU-2\ZA-3182A1	Digital	VALVE FAILED TO OPEN Y-71.1	Display	04divbox	HANFORD CROSS SITE TRANSFER SYSTEM - PCU-2 - DIVERSION BOX 6241-A
			Parameters	S3182a	
			Derived Tags	Global	Derived Tag file
			Alarm Subsystem	Alarmed Tag	
PCU-2\ZA-3182A1_ACK	Digital	VALVE FAILED TO OPEN Y-71.1 ACKNOWLEDGE	Alarm Acknowledge Bit Tag	PCU-2\ZA-3182A1	
PCU-2\ZA-3182A2	Digital	VALVE FAILED TO CLOSE Y-71.1	Display	04divbox	HANFORD CROSS SITE TRANSFER SYSTEM - PCU-2 - DIVERSION BOX 6241-A
			Parameters	S3182a	
			Derived Tags	Global	Derived Tag file
			Alarm Subsystem	Alarmed Tag	
PCU-2\ZA-3182A2_ACK	Digital	VALVE FAILED TO CLOSE Y-71.1 ACKNOWLEDGE	Alarm Acknowledge Bit Tag	PCU-2\ZA-3182A2	
PCU-2\ZA-3182B	Digital	VALVE POSITION SWITCH FAILURE Y-71.1	Display	04divbox	HANFORD CROSS SITE TRANSFER SYSTEM - PCU-2 - DIVERSION BOX 6241-A
			Parameters	S3182b	
			Derived Tags	Global	Derived Tag file
			Alarm Subsystem	Alarmed Tag	
PCU-2\ZA-3182B_ACK	Digital	VALVE POSITION SWITCH FAILURE Y-71.1 ACKNOWLEDGE	Alarm Acknowledge Bit Tag	PCU-2\ZA-3182B	
PCU-2\ZA-3182B1	Digital	VALVE FAILED TO OPEN Y-71.1	Display	04divbox	HANFORD CROSS SITE TRANSFER SYSTEM - PCU-2 - DIVERSION BOX 6241-A
			Parameters	S3182b	
			Derived Tags	Global	Derived Tag file
			Alarm Subsystem	Alarmed Tag	
PCU-2\ZA-3182B1_ACK	Digital	VALVE FAILED TO OPEN Y-71.1 ACKNOWLEDGE	Alarm Acknowledge Bit Tag	PCU-2\ZA-3182B1	
PCU-2\ZA-3182B2	Digital	VALVE FAILED TO CLOSE Y-71.1	Display	04divbox	HANFORD CROSS SITE TRANSFER SYSTEM - PCU-2 - DIVERSION BOX 6241-A
			Parameters	S3182b	
			Derived Tags	Global	Derived Tag file
			Alarm Subsystem	Alarmed Tag	
PCU-2\ZA-3182B2_ACK	Digital	VALVE FAILED TO CLOSE Y-71.1 ACKNOWLEDGE	Alarm Acknowledge Bit Tag	PCU-2\ZA-3182B2	
PCU-2\ZA-3183A	Digital	VALVE POSITION SWITCH FAILURE Y-71.1	Display	04divbox	HANFORD CROSS SITE TRANSFER SYSTEM - PCU-2 - DIVERSION BOX 6241-A
			Parameters	S3183a	
			Derived Tags	Global	Derived Tag file
			Alarm Subsystem	Alarmed Tag	
PCU-2\ZA-3183A_ACK	Digital	VALVE POSITION SWITCH FAILURE Y-71.1 ACKNOWLEDGE	Alarm Acknowledge Bit Tag	PCU-2\ZA-3183A	
PCU-2\ZA-3183A1	Digital	VALVE FAILED TO OPEN Y-71.1	Display	04divbox	HANFORD CROSS SITE TRANSFER SYSTEM - PCU-2 - DIVERSION BOX 6241-A
			Parameters	S3183a	
			Derived Tags	Global	Derived Tag file
			Alarm Subsystem	Alarmed Tag	
PCU-2\ZA-3183A1_ACK	Digital	VALVE FAILED TO OPEN Y-71.1 ACKNOWLEDGE	Alarm Acknowledge Bit Tag	PCU-2\ZA-3183A1	
PCU-2\ZA-3183A2	Digital	VALVE FAILED TO CLOSE Y-71.1	Display	04divbox	HANFORD CROSS SITE TRANSFER SYSTEM - PCU-2 - DIVERSION BOX 6241-A
			Parameters	S3183a	
			Derived Tags	Global	Derived Tag file
			Alarm Subsystem	Alarmed Tag	
PCU-2\ZA-3183A2_ACK	Digital	VALVE FAILED TO CLOSE Y-71.1 ACKNOWLEDGE	Alarm Acknowledge Bit Tag	PCU-2\ZA-3183A2	

Tag Name	Tag Type	Tag Description	Component Type	Component Name	Component Description
PCU-2\ZA-3183B	Digital	VALVE POSITION SWITCH FAILURE Y-71.1	Display	04divbox	HANFORD CROSS SITE TRANSFER SYSTEM - PCU-2 - DIVERSION BOX 6241-A
			Parameters	S3183b	
			Derived Tags	Global	Derived Tag file
			Alarm Subsystem	Alarmed Tag	
PCU-2\ZA-3183B_ACK	Digital	VALVE POSITION SWITCH FAILURE Y-71.1 ACKNOWLEDGE	Alarm Acknowledge Bit Tag	PCU-2\ZA-3183B	
PCU-2\ZA-3183B1	Digital	VALVE FAILED TO OPEN Y-71.1	Display	04divbox	HANFORD CROSS SITE TRANSFER SYSTEM - PCU-2 - DIVERSION BOX 6241-A
			Parameters	S3183b	
			Derived Tags	Global	Derived Tag file
			Alarm Subsystem	Alarmed Tag	
PCU-2\ZA-3183B1_ACK	Digital	VALVE FAILED TO OPEN Y-71.1 ACKNOWLEDGE	Alarm Acknowledge Bit Tag	PCU-2\ZA-3183B1	
PCU-2\ZA-3183B2	Digital	VALVE FAILED TO CLOSE Y-71.1	Display	04divbox	HANFORD CROSS SITE TRANSFER SYSTEM - PCU-2 - DIVERSION BOX 6241-A
			Parameters	S3183b	
			Derived Tags	Global	Derived Tag file
			Alarm Subsystem	Alarmed Tag	
PCU-2\ZA-3183B2_ACK	Digital	VALVE FAILED TO CLOSE Y-71.1 ACKNOWLEDGE	Alarm Acknowledge Bit Tag	PCU-2\ZA-3183B2	
PCU-2\ZA-3184	Digital	VALVE POSITION SWITCH FAILURE Y-71.1	Display	04divbox	HANFORD CROSS SITE TRANSFER SYSTEM - PCU-2 - DIVERSION BOX 6241-A
			Parameters	S3184	
			Alarm Subsystem	Alarmed Tag	
PCU-2\ZA-3184-1	Digital	VALVE FAILED TO OPEN Y-71.1	Display	04divbox	HANFORD CROSS SITE TRANSFER SYSTEM - PCU-2 - DIVERSION BOX 6241-A
			Parameters	S3184	
			Alarm Subsystem	Alarmed Tag	
PCU-2\ZA-3184-1_ACK	Digital	VALVE FAILED TO OPEN Y-71.1 ACKNOWLEDGE	Alarm Acknowledge Bit Tag	PCU-2\ZA-3184-1	
PCU-2\ZA-3184-2	Digital	VALVE FAILED TO CLOSE Y-71.1	Display	04divbox	HANFORD CROSS SITE TRANSFER SYSTEM - PCU-2 - DIVERSION BOX 6241-A
			Parameters	S3184	
			Alarm Subsystem	Alarmed Tag	
PCU-2\ZA-3184-2_ACK	Digital	VALVE FAILED TO CLOSE Y-71.1 ACKNOWLEDGE	Alarm Acknowledge Bit Tag	PCU-2\ZA-3184-2	
PCU-2\ZA-3184_ACK	Digital	VALVE POSITION SWITCH FAILURE Y-71.1 ACKNOWLEDGE	Alarm Acknowledge Bit Tag	PCU-2\ZA-3184	
PCU-2\ZA-PUMPS	Digital	PCU-2 PUMP FAILURE FOR OVERVIEW SCREEN INDICATION	Display	01overvw	HANFORD CROSS SITE TRANSFER SYSTEM - SYSTEM OVERVIEW DIAGRAM
			Derived Tags	Global	Derived Tag file
PCU-2\ZA-VALVES	Digital	PCU-2 VALVE FAILURE FOR OVERVIEW SCREEN INDICATION	Display	01overvw	HANFORD CROSS SITE TRANSFER SYSTEM - SYSTEM OVERVIEW DIAGRAM
			Derived Tags	Global	Derived Tag file
PCU-2\ZLH-3125AA	Digital	MOV-3125AA IS OPEN Y79-1	Display	07draina	HANFORD CROSS SITE TRANSFER SYSTEM - PCU-2 - BOOSTER PUMP P-3125A - DRAIN VALVES
			Parameters	M3125aa	
PCU-2\ZLH-3125AB	Digital	MOV-3125AB IS OPEN Y79-1	Display	07draina	HANFORD CROSS SITE TRANSFER SYSTEM - PCU-2 - BOOSTER PUMP P-3125A - DRAIN VALVES
			Parameters	M3125ab	
PCU-2\ZLH-3125AC	Digital	MOV-3125AC IS OPEN Y79-1	Display	07draina	HANFORD CROSS SITE TRANSFER SYSTEM - PCU-2 - BOOSTER PUMP P-3125A - DRAIN VALVES
			Parameters	M3125ac	
PCU-2\ZLH-3125AD	Digital	MOV-3125AD IS OPEN Y79-1	Display	07draina	HANFORD CROSS SITE TRANSFER SYSTEM - PCU-2 - BOOSTER PUMP P-3125A - DRAIN VALVES
			Parameters	M3125ad	
PCU-2\ZLH-3125AE	Digital	MOV-3125AE IS OPEN Y79-1	Display	07draina	HANFORD CROSS SITE TRANSFER SYSTEM - PCU-2 - BOOSTER PUMP P-3125A - DRAIN VALVES
			Parameters	M3125ae	
PCU-2\ZLH-3125AF	Digital	MOV-3125AF IS OPEN Y79-1	Display	07draina	HANFORD CROSS SITE TRANSFER SYSTEM - PCU-2 - BOOSTER PUMP P-3125A - DRAIN VALVES
			Parameters	M3125af	

Tag Name	Tag Type	Tag Description	Component Type	Component Name	Component Description
PCU-2\ZLH-3125AG	Digital	MOV-3125AG IS OPEN Y79-1	Display	07draina	HANFORD CROSS SITE TRANSFER SYSTEM - PCU-2 - BOOSTER PUMP P-3125A - DRAIN VALVES
			Parameters	M3125ag	
PCU-2\ZLH-3125AH	Digital	MOV-3125AH IS OPEN Y79-1	Display	07draina	HANFORD CROSS SITE TRANSFER SYSTEM - PCU-2 - BOOSTER PUMP P-3125A - DRAIN VALVES
			Parameters	M3125ah	
PCU-2\ZLH-3125AJ	Digital	MOV-3125AJ IS OPEN Y79-2	Display	07draina	HANFORD CROSS SITE TRANSFER SYSTEM - PCU-2 - BOOSTER PUMP P-3125A - DRAIN VALVES
			Parameters	M3125aj	
PCU-2\ZLH-3125AK	Digital	MOV-3125AK IS OPEN Y79-2	Display	07draina	HANFORD CROSS SITE TRANSFER SYSTEM - PCU-2 - BOOSTER PUMP P-3125A - DRAIN VALVES
			Parameters	M3125ak	
PCU-2\ZLH-3125BA	Digital	MOV-3125BA IS OPEN Y80-1	Display	08drainb	HANFORD CROSS SITE TRANSFER SYSTEM - PCU-2 - BOOSTER PUMP P-3125B - DRAIN VALVES
			Parameters	M3125ba	
PCU-2\ZLH-3125BB	Digital	MOV-3125BB IS OPEN Y80-1	Display	08drainb	HANFORD CROSS SITE TRANSFER SYSTEM - PCU-2 - BOOSTER PUMP P-3125B - DRAIN VALVES
			Parameters	M3125bb	
PCU-2\ZLH-3125BC	Digital	MOV-3125BC IS OPEN Y80-1	Display	08drainb	HANFORD CROSS SITE TRANSFER SYSTEM - PCU-2 - BOOSTER PUMP P-3125B - DRAIN VALVES
			Parameters	M3125bc	
PCU-2\ZLH-3125BD	Digital	MOV-3125BD IS OPEN Y80-1	Display	08drainb	HANFORD CROSS SITE TRANSFER SYSTEM - PCU-2 - BOOSTER PUMP P-3125B - DRAIN VALVES
			Parameters	M3125bd	
PCU-2\ZLH-3125BE	Digital	MOV-3125BE IS OPEN Y80-1	Display	08drainb	HANFORD CROSS SITE TRANSFER SYSTEM - PCU-2 - BOOSTER PUMP P-3125B - DRAIN VALVES
			Parameters	M3125be	
PCU-2\ZLH-3125BF	Digital	MOV-3125BF IS OPEN Y80-1	Display	08drainb	HANFORD CROSS SITE TRANSFER SYSTEM - PCU-2 - BOOSTER PUMP P-3125B - DRAIN VALVES
			Parameters	M3125bf	
PCU-2\ZLH-3125BG	Digital	MOV-3125BG IS OPEN Y80-1	Display	08drainb	HANFORD CROSS SITE TRANSFER SYSTEM - PCU-2 - BOOSTER PUMP P-3125B - DRAIN VALVES
			Parameters	M3125bg	
PCU-2\ZLH-3125BH	Digital	MOV-3125BH IS OPEN Y80-1	Display	08drainb	HANFORD CROSS SITE TRANSFER SYSTEM - PCU-2 - BOOSTER PUMP P-3125B - DRAIN VALVES
			Parameters	M3125bh	
PCU-2\ZLH-3125BJ	Digital	MOV-3125BJ IS OPEN Y81-2	Display	08drainb	HANFORD CROSS SITE TRANSFER SYSTEM - PCU-2 - BOOSTER PUMP P-3125B - DRAIN VALVES
			Parameters	M3125bj	
PCU-2\ZLH-3125BK	Digital	MOV-3125BK IS OPEN Y81-2	Display	08drainb	HANFORD CROSS SITE TRANSFER SYSTEM - PCU-2 - BOOSTER PUMP P-3125B - DRAIN VALVES
			Parameters	M3125bk	
PCU-2\ZLH-3125C	Digital	SOV-3125C IS OPEN Y84-1	Display	04divbox	HANFORD CROSS SITE TRANSFER SYSTEM - PCU-2 - DIVERSION BOX 6241-A
			Parameters	S3125c	
PCU-2\ZLH-3125D	Digital	SOV-3125D IS OPEN Y86-1	Display	04divbox	HANFORD CROSS SITE TRANSFER SYSTEM - PCU-2 - DIVERSION BOX 6241-A
			Parameters	S3125d	
PCU-2\ZLH-3125E	Digital	SOV-3125E IS OPEN Y83-1	Display	04divbox	HANFORD CROSS SITE TRANSFER SYSTEM - PCU-2 - DIVERSION BOX 6241-A
			Parameters	S3125e	

Tag Name	Tag Type	Tag Description	Component Type	Component Name	Component Description
PCU-2\ZLH-3125G	Digital	SOV-3125G IS OPEN Y85-1	Display	04divbox	HANFORD CROSS SITE TRANSFER SYSTEM - PCU-2 - DIVERSION BOX 6241-A
			Parameters	S3125g	
PCU-2\ZLH-3156A	Digital	MOV-3156A IS OPEN Y89-1	Display	04divbox	HANFORD CROSS SITE TRANSFER SYSTEM - PCU-2 - DIVERSION BOX 6241-A
			Parameters	M3156a	
PCU-2\ZLH-3156B	Digital	MOV-3156B IS OPEN Y89-2	Display	04divbox	HANFORD CROSS SITE TRANSFER SYSTEM - PCU-2 - DIVERSION BOX 6241-A
			Parameters	M3156b	
PCU-2\ZLH-3163	Digital	SOV-3163 IS OPEN	Display	04divbox	HANFORD CROSS SITE TRANSFER SYSTEM - PCU-2 - DIVERSION BOX 6241-A
			Parameters	S3163	
PCU-2\ZLH-3173A	Digital	SOV-3173A IS OPEN Y87-1	Display	04divbox	HANFORD CROSS SITE TRANSFER SYSTEM - PCU-2 - DIVERSION BOX 6241-A
			Parameters	S3173a	
PCU-2\ZLH-3173B	Digital	SOV-3173B IS OPEN Y87-2	Display	04divbox	HANFORD CROSS SITE TRANSFER SYSTEM - PCU-2 - DIVERSION BOX 6241-A
			Parameters	S3173b	
PCU-2\ZLH-3182A	Digital	SOV-3182A IS OPEN Y71	Display	04divbox	HANFORD CROSS SITE TRANSFER SYSTEM - PCU-2 - DIVERSION BOX 6241-A
			Parameters	S3182a	
PCU-2\ZLH-3182B	Digital	SOV-3182B IS OPEN Y71	Display	04divbox	HANFORD CROSS SITE TRANSFER SYSTEM - PCU-2 - DIVERSION BOX 6241-A
			Parameters	S3182b	
PCU-2\ZLH-3183A	Digital	SOV-3183A IS OPEN Y71	Display	04divbox	HANFORD CROSS SITE TRANSFER SYSTEM - PCU-2 - DIVERSION BOX 6241-A
			Parameters	S3183a	
PCU-2\ZLH-3183B	Digital	SOV-3183B IS OPEN Y71	Display	04divbox	HANFORD CROSS SITE TRANSFER SYSTEM - PCU-2 - DIVERSION BOX 6241-A
			Parameters	S3183b	
PCU-2\ZLH-3184	Digital	SOV-3184 IS OPEN Y71	Display	04divbox	HANFORD CROSS SITE TRANSFER SYSTEM - PCU-2 - DIVERSION BOX 6241-A
			Parameters	S3184	
PCU-2\ZLL-3125AA	Digital	MOV-3125AA IS CLOSED Y80-1	Display	07draina	HANFORD CROSS SITE TRANSFER SYSTEM - PCU-2 - BOOSTER PUMP P-3125A - DRAIN VALVES
			Parameters	M3125aa	
PCU-2\ZLL-3125AB	Digital	MOV-3125AB IS CLOSED Y80-1	Display	07draina	HANFORD CROSS SITE TRANSFER SYSTEM - PCU-2 - BOOSTER PUMP P-3125A - DRAIN VALVES
			Parameters	M3125ab	
PCU-2\ZLL-3125AC	Digital	MOV-3125AC IS CLOSED Y80-1	Display	07draina	HANFORD CROSS SITE TRANSFER SYSTEM - PCU-2 - BOOSTER PUMP P-3125A - DRAIN VALVES
			Parameters	M3125ac	
PCU-2\ZLL-3125AD	Digital	MOV-3125AD IS CLOSED Y80-1	Display	07draina	HANFORD CROSS SITE TRANSFER SYSTEM - PCU-2 - BOOSTER PUMP P-3125A - DRAIN VALVES
			Parameters	M3125ad	
PCU-2\ZLL-3125AE	Digital	MOV-3125AE IS CLOSED Y80-1	Display	07draina	HANFORD CROSS SITE TRANSFER SYSTEM - PCU-2 - BOOSTER PUMP P-3125A - DRAIN VALVES
			Parameters	M3125ae	
PCU-2\ZLL-3125AF	Digital	MOV-3125AF IS CLOSED Y80-1	Display	07draina	HANFORD CROSS SITE TRANSFER SYSTEM - PCU-2 - BOOSTER PUMP P-3125A - DRAIN VALVES
			Parameters	M3125af	
PCU-2\ZLL-3125AG	Digital	MOV-3125AG IS CLOSED Y80-1	Display	07draina	HANFORD CROSS SITE TRANSFER SYSTEM - PCU-2 - BOOSTER PUMP P-3125A - DRAIN VALVES
			Parameters	M3125ag	

Tag Name	Tag Type	Tag Description	Component Type	Component Name	Component Description
PCU-2\ZLL-3125AH	Digital	MOV-3125AH IS CLOSED Y80-1	Display	07draina	HANFORD CROSS SITE TRANSFER SYSTEM - PCU-2 - BOOSTER PUMP P-3125A - DRAIN VALVES
			Parameters	M3125ah	
PCU-2\ZLL-3125AJ	Digital	MOV-3125AJ IS CLOSED Y80-2	Display	07draina	HANFORD CROSS SITE TRANSFER SYSTEM - PCU-2 - BOOSTER PUMP P-3125A - DRAIN VALVES
			Parameters	M3125aj	
PCU-2\ZLL-3125AK	Digital	MOV-3125AK IS CLOSED Y80-2	Display	07draina	HANFORD CROSS SITE TRANSFER SYSTEM - PCU-2 - BOOSTER PUMP P-3125A - DRAIN VALVES
			Parameters	M3125ak	
PCU-2\ZLL-3125BA	Digital	MOV-3125BA IS CLOSED Y81-1	Display	08drainb	HANFORD CROSS SITE TRANSFER SYSTEM - PCU-2 - BOOSTER PUMP P-3125B - DRAIN VALVES
			Parameters	M3125ba	
PCU-2\ZLL-3125BB	Digital	MOV-3125BB IS CLOSED Y81-1	Display	08drainb	HANFORD CROSS SITE TRANSFER SYSTEM - PCU-2 - BOOSTER PUMP P-3125B - DRAIN VALVES
			Parameters	M3125bb	
PCU-2\ZLL-3125BC	Digital	MOV-3125BC IS CLOSED Y81-1	Display	08drainb	HANFORD CROSS SITE TRANSFER SYSTEM - PCU-2 - BOOSTER PUMP P-3125B - DRAIN VALVES
			Parameters	M3125bc	
PCU-2\ZLL-3125BD	Digital	MOV-3125BD IS CLOSED Y81-1	Display	08drainb	HANFORD CROSS SITE TRANSFER SYSTEM - PCU-2 - BOOSTER PUMP P-3125B - DRAIN VALVES
			Parameters	M3125bd	
PCU-2\ZLL-3125BE	Digital	MOV-3125BE IS CLOSED Y81-1	Display	08drainb	HANFORD CROSS SITE TRANSFER SYSTEM - PCU-2 - BOOSTER PUMP P-3125B - DRAIN VALVES
			Parameters	M3125be	
PCU-2\ZLL-3125BF	Digital	MOV-3125BF IS CLOSED Y81-1	Display	08drainb	HANFORD CROSS SITE TRANSFER SYSTEM - PCU-2 - BOOSTER PUMP P-3125B - DRAIN VALVES
			Parameters	M3125bf	
PCU-2\ZLL-3125BG	Digital	MOV-3125BG IS CLOSED Y81-1	Display	08drainb	HANFORD CROSS SITE TRANSFER SYSTEM - PCU-2 - BOOSTER PUMP P-3125B - DRAIN VALVES
			Parameters	M3125bg	
PCU-2\ZLL-3125BH	Digital	MOV-3125BH IS CLOSED Y81-1	Display	08drainb	HANFORD CROSS SITE TRANSFER SYSTEM - PCU-2 - BOOSTER PUMP P-3125B - DRAIN VALVES
			Parameters	M3125bh	
PCU-2\ZLL-3125BJ	Digital	MOV-3125BJ IS CLOSED Y81-2	Display	08drainb	HANFORD CROSS SITE TRANSFER SYSTEM - PCU-2 - BOOSTER PUMP P-3125B - DRAIN VALVES
			Parameters	M3125bj	
PCU-2\ZLL-3125BK	Digital	MOV-3125BK IS CLOSED Y81-2	Display	08drainb	HANFORD CROSS SITE TRANSFER SYSTEM - PCU-2 - BOOSTER PUMP P-3125B - DRAIN VALVES
			Parameters	M3125bk	
PCU-2\ZLL-3125C	Digital	SOV-3125C IS CLOSED Y84-1	Display	04divbox	HANFORD CROSS SITE TRANSFER SYSTEM - PCU-2 - DIVERSION BOX 6241-A
			Parameters	S3125c	
PCU-2\ZLL-3125D	Digital	SOV-3125D IS CLOSED Y86-1	Display	04divbox	HANFORD CROSS SITE TRANSFER SYSTEM - PCU-2 - DIVERSION BOX 6241-A
			Parameters	S3125d	
PCU-2\ZLL-3125E	Digital	SOV-3125E IS CLOSED Y83-1	Display	04divbox	HANFORD CROSS SITE TRANSFER SYSTEM - PCU-2 - DIVERSION BOX 6241-A
			Parameters	S3125e	
PCU-2\ZLL-3125G	Digital	SOV-3125G IS CLOSED Y85-1	Display	04divbox	HANFORD CROSS SITE TRANSFER SYSTEM - PCU-2 - DIVERSION BOX 6241-A
			Parameters	S3125g	

Tag Name	Tag Type	Tag Description	Component Type	Component Name	Component Description
PCU-2\ZLL-3156A	Digital	MOV-3156A IS CLOSED Y89-1	Display	04divbox	HANFORD CROSS SITE TRANSFER SYSTEM - PCU-2 - DIVERSION BOX 6241-A
			Parameters	M3156a	
PCU-2\ZLL-3156B	Digital	MOV-3156B IS CLOSED Y89-2	Display	04divbox	HANFORD CROSS SITE TRANSFER SYSTEM - PCU-2 - DIVERSION BOX 6241-A
			Parameters	M3156b	
PCU-2\ZLL-3163	Digital	SOV-3163 IS CLOSED	Display	04divbox	HANFORD CROSS SITE TRANSFER SYSTEM - PCU-2 - DIVERSION BOX 6241-A
			Parameters	S3163	
PCU-2\ZLL-3173A	Digital	SOV-3173A IS CLOSED Y87-1	Display	04divbox	HANFORD CROSS SITE TRANSFER SYSTEM - PCU-2 - DIVERSION BOX 6241-A
			Parameters	S3173a	
PCU-2\ZLL-3173B	Digital	SOV-3173B IS CLOSED Y87-2	Display	04divbox	HANFORD CROSS SITE TRANSFER SYSTEM - PCU-2 - DIVERSION BOX 6241-A
			Parameters	S3173b	
PCU-2\ZLL-3182A	Digital	SOV-3182A IS CLOSED Y71	Display	04divbox	HANFORD CROSS SITE TRANSFER SYSTEM - PCU-2 - DIVERSION BOX 6241-A
			Parameters	S3182a	
PCU-2\ZLL-3182B	Digital	SOV-3182B IS CLOSED Y71	Display	04divbox	HANFORD CROSS SITE TRANSFER SYSTEM - PCU-2 - DIVERSION BOX 6241-A
			Parameters	S3182b	
PCU-2\ZLL-3183A	Digital	SOV-3183A IS CLOSED Y71	Display	04divbox	HANFORD CROSS SITE TRANSFER SYSTEM - PCU-2 - DIVERSION BOX 6241-A
			Parameters	S3183a	
PCU-2\ZLL-3183B	Digital	SOV-3183B IS CLOSED Y71	Display	04divbox	HANFORD CROSS SITE TRANSFER SYSTEM - PCU-2 - DIVERSION BOX 6241-A
			Parameters	S3183b	
PCU-2\ZLL-3184	Digital	SOV-3184 IS CLOSED Y71	Display	04divbox	HANFORD CROSS SITE TRANSFER SYSTEM - PCU-2 - DIVERSION BOX 6241-A
			Parameters	S3184	
PCU-3\0_OFF	Digital	ALWAYS OFF PLACE HOLDER FOR PCU-3 VARIABLES			
PCU-3\BATT_BAD_PLC3	Digital	PLC-3 BATTERY IS BAD OR MISSING	Tag Monitor	HeartBeat	
			Display	00Entry	TEST ENTRY
			Display	01overvw	HANFORD CROSS SITE TRANSFER SYSTEM - SYSTEM OVERVIEW DIAGRAM
			Alarm Subsystem	Alarmed Tag	
PCU-3\BATT_BAD_PLC3_ACK	Digital	PLC-3 BATTERY IS BAD OR MISSING ACKNOWLEDGE	Alarm Acknowledge Bit Tag	PCU-3\BATT_BAD_PLC3	
PCU-3\COM-3_OCS	Digital	COMMUNICATION WITH OCS IGNORED	Tag Monitor	HeartBeat	
			Display	01overvw	HANFORD CROSS SITE TRANSFER SYSTEM - SYSTEM OVERVIEW DIAGRAM
			Macro	Alm_Suppress	
			Alarm Subsystem	Alarmed Tag	
PCU-3\COM-3_OCS_ACK	Digital	COMMUNICATION WITH OCS IGNORED ACKNOWLEDGE	Alarm Acknowledge Bit Tag	PCU-3\COM-3_OCS	
PCU-3\COM-31	Digital	COMMUN. WITH PCU-1 IGNORED	Display	01overvw	HANFORD CROSS SITE TRANSFER SYSTEM - SYSTEM OVERVIEW DIAGRAM
			Alarm Subsystem	Alarmed Tag	
PCU-3\COM-31_ACK	Digital	COMMUN. WITH PCU-1 IGNORED ACKNOWLEDGE	Alarm Acknowledge Bit Tag	PCU-3\COM-31	
PCU-3\COM-32	Digital	COMMUN. WITH PCU-2 IGNORED	Display	01overvw	HANFORD CROSS SITE TRANSFER SYSTEM - SYSTEM OVERVIEW DIAGRAM
			Alarm Subsystem	Alarmed Tag	
PCU-3\COM-32_ACK	Digital	COMMUN. WITH PCU-2 IGNORED ACKNOWLEDGE	Alarm Acknowledge Bit Tag	PCU-3\COM-32	
PCU-3\COM-34	Digital	COMMUN. WITH PCU-4 IGNORED	Display	00Entry	TEST ENTRY
			Display	01overvw	HANFORD CROSS SITE TRANSFER SYSTEM - SYSTEM OVERVIEW DIAGRAM
			Alarm Subsystem	Alarmed Tag	
PCU-3\COM-34_ACK	Digital	COMMUN. WITH PCU-4 IGNORED ACKNOWLEDGE	Alarm Acknowledge Bit Tag	PCU-3\COM-34	

Tag Name	Tag Type	Tag Description	Component Type	Component Name	Component Description
PCU-3\COM-35	Digital	COMMUN. WITH PCU-5 IGNORED	Display	01overvw	HANFORD CROSS SITE TRANSFER SYSTEM - SYSTEM OVERVIEW DIAGRAM
			Alarm Subsystem	Alarmed Tag	
PCU-3\COM-35_ACK	Digital	COMMUN. WITH PCU-5 IGNORED ACKNOWLEDGE	Alarm Acknowledge Bit Tag	PCU-3\COM-35	
PCU-3\COM-OCS_3	Digital	COMMUN. WITH PCU-3 IGNORED - DETECTED AT OCS	Display	01overvw	HANFORD CROSS SITE TRANSFER SYSTEM - SYSTEM OVERVIEW DIAGRAM
			Events	Mt_hb	Communications Heart Beat Event file
			Events	System	Event file
			Alarm Subsystem	Alarmed Tag	
PCU-3\COM-OCS_3_ACK	Digital	COMMUN. WITH PCU-3 IGNORED - DETECTED AT OCS ACKNOWLEDGE	Alarm Acknowledge Bit Tag	PCU-3\COM-OCS_3	
PCU-3\COM_OCS_3_MNT	Digital	Communiations failure with the PLC detected in this OIT	Derived Tags	Mt_hb	Derived Tag file
			Alarm Subsystem	Alarmed Tag	
PCU-3\COM_OCS_3_OPR	Digital	Communiations failure with the PLC detected in this OIT	Derived Tags	Op_hb	Derived Tag file
			Alarm Subsystem	Alarmed Tag	
PCU-3\D_OVR_REQ_M	Digital	DISPLAY OVERVIEW SCREEN ON MAINTENANCE REQUEST	Display	00Entry	TEST ENTRY
			Display	00mode	HANFORD CROSS SITE TRANSFER SYSTEM - WELCOME AND TRANSFER MODE SELECTION SCREEN
			Events	System	Event file
PCU-3\D_OVR_REQ_O	Digital	DISPLAY OVERVIEW SCREEN ON OPERATIONS REQUEST	Display	00Entry	TEST ENTRY
			Events	System	Event file
PCU-3\D_OVR_STAT_M	Digital	DISPLAY OVERVIEW SCREEN ON MAINTENANCE	Display	00mode	HANFORD CROSS SITE TRANSFER SYSTEM - WELCOME AND TRANSFER MODE SELECTION SCREEN
			Events	System	Event file
			Macro	StartMac	
PCU-3\D_OVR_STAT_O	Digital	DISPLAY OVERVIEW SCREEN ON OPERATIONS	Events	System	Event file
			Macro	StartMac	
PCU-3\HB_COMM_CNT	Analog	Communications checking counter	Tag Monitor	HeartBeat	
			Derived Tags	Comm_Check	Derived Tag file
PCU-3\HB_COMM_OK	Digital	Communications from PLC currently OK	Tag Monitor	HeartBeat	
			Derived Tags	Comm_Check	Derived Tag file
			Derived Tags	Mt_hb	Derived Tag file
			Derived Tags	Op_hb	Derived Tag file
PCU-3\HB_COMM_TIME	Analog	ACCUMULATED TIME FOR THE COMMUNICATION CHECK HEART-BEAT	Events	Mt_hb	Communications Heart Beat Event file
PCU-3\HB_OCS_PLC3	Digital	HEARTBEAT FROM OCS TO PLC-3	Tag Monitor	HeartBeat	
			Events	Mt_hb	Communications Heart Beat Event file
			Events	System	Event file
PCU-3\HB_OCS_PLC3_MNT	Analog	COMMUN. HEARTBEAT REGISTER FROM MAINTENANCE OIT TO PCU-3	Derived Tags	Mt_hb	Derived Tag file
PCU-3\HB_OCS_PLC3_OPR	Analog	COMMUN. HEARTBEAT REGISTER FROM OPERATIONS OIT TO PCU-3	Derived Tags	Op_hb	Derived Tag file
PCU-3\HB_PLC3_OCS	Digital	HEARTBEAT FROM PLC-3 TO OCS	Tag Monitor	HeartBeat	
			Events	Mt_hb	Communications Heart Beat Event file
			Events	System	Event file
PCU-3\HB_PLC3_OCS_BOTH	Analog	COMMUN. HEARTBEAT REGISTER FROM PCU-3 TO BOTH OPERATOR TERMINALS	Tag Monitor	HeartBeat	
			Derived Tags	Comm_Check	Derived Tag file
			Derived Tags	Comm_Reset	Derived Tag file
PCU-3\HB_REF	Analog	Communications heartbeat reference register	Tag Monitor	HeartBeat	
			Derived Tags	Comm_Check	Derived Tag file
			Derived Tags	Comm_Reset	Derived Tag file
PCU-3\HS-1000A	Digital	OCS INITIATE TRANSFER Y-70.1			
PCU-3\HS-1000B	Digital	OCS RESET TRANSFER Y-70.1			
PCU-3\HS-1001	Digital	OCS SELECT TRANSFER TYPE 1 Y-70.1			
PCU-3\HS-1002A	Digital	OCS SELECT TRANSFER TYPE 2A Y-70.1			
PCU-3\HS-1002B	Digital	OCS SELECT TRANSFER TYPE 2B Y-70.1			
PCU-3\HS-1003	Digital	OCS SELECT TRANSFER TYPE 3 Y-70.1			

Tag Name	Tag Type	Tag Description	Component Type	Component Name	Component Description
PCU-3\HS-1010A	Digital	LEAK DETECTION OVERRIDE Y-72.1			
PCU-3\HS-1010B	Digital	LEAK DETECTION OVERRIDE RESET Y-72.1			
PCU-3\HS-3165A1	Digital	OCS OPEN VALVE SOV-3165A Y71	Parameters	S3165a	
PCU-3\HS-3165A2	Digital	OCS CLOSE VALVE SOV-3165A Y71	Parameters	S3165a	
PCU-3\HS-3165B1	Digital	OCS OPEN VALVE SOV-3165B Y71	Parameters	S3165b	
PCU-3\HS-3165B2	Digital	OCS CLOSE VALVE SOV-3165B Y71	Parameters	S3165b	
PCU-3\HS-3166A1	Digital	OCS OPEN VALVE SOV-3166A Y71	Parameters	S3166a	
PCU-3\HS-3166A2	Digital	OCS CLOSE VALVE SOV-3166A Y71	Parameters	S3166a	
PCU-3\HS-3166B1	Digital	OCS OPEN VALVE SOV-3166B Y71	Parameters	S3166b	
PCU-3\HS-3166B2	Digital	OCS CLOSE VALVE SOV-3166B Y71	Parameters	S3166b	
PCU-3\HS-3167A1	Digital	OCS OPEN VALVE SOV-3167A Y88-1	Parameters	S3167a	
PCU-3\HS-3167A2	Digital	OCS CLOSE VALVE SOV-3167A Y88-1	Parameters	S3167a	
PCU-3\HS-3167B1	Digital	OCS OPEN VALVE SOV-3167B Y87-2	Parameters	S3167b	
PCU-3\HS-3167B2	Digital	OCS CLOSE VALVE SOV-3167B Y87-2	Parameters	S3167b	
PCU-3\HS-3168A1	Digital	OCS OPEN VALVE SOL-3168A Y81-3	Parameters	S3168a	
PCU-3\HS-3168A2	Digital	OCS CLOSE VALVE SOL-3168A Y81-3	Parameters	S3168a	
PCU-3\HS-3168B1	Digital	OCS OPEN VALVE SOL-3168B Y81-4	Parameters	S3168b	
PCU-3\HS-3168B2	Digital	OCS CLOSE VALVE SOL-3168B Y81-4	Parameters	S3168b	
PCU-3\HS-3185A1	Digital	OCS OPEN VALVE SOL-3185A Y81-1	Parameters	S3185a	
PCU-3\HS-3185A2	Digital	OCS CLOSE VALVE SOL-3185A Y81-1	Parameters	S3185a	
PCU-3\HS-3185B1	Digital	OCS OPEN VALVE SOL-3185B Y81-2	Parameters	S3185b	
PCU-3\HS-3185B2	Digital	OCS CLOSE VALVE SOL-3185B Y81-2	Parameters	S3185b	
PCU-3\HS_MD_CLEAR	Digital	TRANSFER MODE SELECT ENABLE	Display	00mode	HANFORD CROSS SITE TRANSFER SYSTEM - WELCOME AND TRANSFER MODE SELECTION SCREEN
PCU-3\HS_MD_SL_101	Digital	SLURRY MODE TRANSFER FROM SY101 SELECT	Display	00mode	HANFORD CROSS SITE TRANSFER SYSTEM - WELCOME AND TRANSFER MODE SELECTION SCREEN
PCU-3\HS_MD_SL_102	Digital	SLURRY MODE TRANSFER FROM SY102 SELECT	Display	00mode	HANFORD CROSS SITE TRANSFER SYSTEM - WELCOME AND TRANSFER MODE SELECTION SCREEN
PCU-3\HS_MD_SU_101	Digital	SUPERNATE MODE TRANSFER FROM SY101 SELECT	Display	00mode	HANFORD CROSS SITE TRANSFER SYSTEM - WELCOME AND TRANSFER MODE SELECTION SCREEN
PCU-3\HS_MD_SU_102	Digital	SUPERNATE MODE TRANSFER SELECT FROM SY102 SELECT	Display	00mode	HANFORD CROSS SITE TRANSFER SYSTEM - WELCOME AND TRANSFER MODE SELECTION SCREEN
PCU-3\LDA-3151	Digital	LEAK DETECTED AT VENT STATION 6241-V SUMP Y-72.1	Display	01overvw	HANFORD CROSS SITE TRANSFER SYSTEM - SYSTEM OVERVIEW DIAGRAM
			Display	09ventsn	HANFORD CROSS SITE TRANSFER SYSTEM - PCU-3 - VENT STATION 6241-V
			Alarm Subsystem	Alarmed Tag	
PCU-3\LDA-3151_ACK	Digital	LEAK DETECTED AT VENT STATION 6241-V SUMP Y-72.1 ACKNOWLEDGE	Alarm Acknowledge Bit Tag	PCU-3\LDA-3151	
PCU-3\LDA-3161	Digital	6241-V ENCASEMENT LEAK DETECTION [OFF = ALARM] Y72	Display	01overvw	HANFORD CROSS SITE TRANSFER SYSTEM - SYSTEM OVERVIEW DIAGRAM
			Display	09ventsn	HANFORD CROSS SITE TRANSFER SYSTEM - PCU-3 - VENT STATION 6241-V
			Alarm Subsystem	Alarmed Tag	
PCU-3\LDA-3161_ACK	Digital	6241-V ENCASEMENT LEAK DETECTION [OFF = ALARM] Y72 ACKNOWLEDGE	Alarm Acknowledge Bit Tag	PCU-3\LDA-3161	
PCU-3\LDA-TR-LINE	Digital	TRANSFER LINE LEAK DETECTED Y-72.1 (COMBINED ALARM)	Display	00Entry	TEST ENTRY
			Display	01overvw	HANFORD CROSS SITE TRANSFER SYSTEM - SYSTEM OVERVIEW DIAGRAM
PCU-3\LDAH-3151	Digital	6241-V SUMP LEAK DETECTION Y72			
PCU-3\LDXA-3151	Digital	SUMP LEAK DETECTOR Y72			
PCU-3\MD_SEL_ENAB	Digital	NEW TRANSFER MODE SELECTION ENABLED ON OIT			

Tag Name	Tag Type	Tag Description	Component Type	Component Name	Component Description
PCU-3\MD_SL_101	Digital	SLURRY MODE TRANSFER FROM SY101 SELECTED	Display	00Entry	TEST ENTRY
			Display	00mode	HANFORD CROSS SITE TRANSFER SYSTEM - WELCOME AND TRANSFER MODE SELECTION SCREEN
			Display	01overvw	HANFORD CROSS SITE TRANSFER SYSTEM - SYSTEM OVERVIEW DIAGRAM
			Display	11sy101	HANFORD CROSS SITE TRANSFER SYSTEM - PCU-1 - TRANSFER PUMP FROM SY-101
			Display	Pmp350pid	Transfer Pump Popup
PCU-3\MD_SL_102	Digital	SLURRY MODE TRANSFER FROM SY102 SELECTED	Display	00Entry	TEST ENTRY
			Display	00mode	HANFORD CROSS SITE TRANSFER SYSTEM - WELCOME AND TRANSFER MODE SELECTION SCREEN
			Display	01overvw	HANFORD CROSS SITE TRANSFER SYSTEM - SYSTEM OVERVIEW DIAGRAM
			Display	12sy102	HANFORD CROSS SITE TRANSFER SYSTEM - PCU-1 - TRANSFER PUMP FROM SY-102
PCU-3\MD_SU_101	Digital	SUPERNATE MOVE TRANSFER FROM SY101 SELECTED	Display	00Entry	TEST ENTRY
			Display	00mode	HANFORD CROSS SITE TRANSFER SYSTEM - WELCOME AND TRANSFER MODE SELECTION SCREEN
			Display	01overvw	HANFORD CROSS SITE TRANSFER SYSTEM - SYSTEM OVERVIEW DIAGRAM
			Display	11sy101	HANFORD CROSS SITE TRANSFER SYSTEM - PCU-1 - TRANSFER PUMP FROM SY-101
			Display	Pmp350pid	Transfer Pump Popup
PCU-3\MD_SU_102	Digital	SUPERNATE MODE TRANSFER FROM SY102 SELECTED	Display	00Entry	TEST ENTRY
			Display	00mode	HANFORD CROSS SITE TRANSFER SYSTEM - WELCOME AND TRANSFER MODE SELECTION SCREEN
			Display	01overvw	HANFORD CROSS SITE TRANSFER SYSTEM - SYSTEM OVERVIEW DIAGRAM
			Display	12sy102	HANFORD CROSS SITE TRANSFER SYSTEM - PCU-1 - TRANSFER PUMP FROM SY-102
PCU-3\P-3116-SD	Digital	SHUTDOWN SUMP PUMP P-3116 Y-82.1			
PCU-3\PAH-3126A	Digital	SUPERNATE LINE HIGH PRESSURE FAILURE	Alarm Subsystem	Alarmed Tag	
PCU-3\PAH-3126A_ACK	Digital	SUPERNATE LINE HIGH PRESSURE FAILURE ACKNOWLEDGE	Alarm Acknowledge Bit Tag	PCU-3\PAH-3126A	
PCU-3\PAH-3167	Digital	VALVE SOV-3167A/B FAILURE Y73	Display	09ventsn	HANFORD CROSS SITE TRANSFER SYSTEM - PCU-3 - VENT STATION 6241-V
			Alarm Subsystem	Alarmed Tag	
PCU-3\PAH-3167_ACK	Digital	VALVE SOV-3167A/B FAILURE Y73 ACKNOWLEDGE	Alarm Acknowledge Bit Tag	PCU-3\PAH-3167	
PCU-3\PAH-3168	Digital	VALVE SOV-3168A/B FAILURE Y73	Display	09ventsn	HANFORD CROSS SITE TRANSFER SYSTEM - PCU-3 - VENT STATION 6241-V
			Macro	Alm_Suppress	
			Alarm Subsystem	Alarmed Tag	
PCU-3\PAH-3168_ACK	Digital	VALVE SOV-3168A/B FAILURE Y73 ACKNOWLEDGE	Alarm Acknowledge Bit Tag	PCU-3\PAH-3168	
PCU-3\PAH-3185	Digital	VALVE SOV-3185A/B FAILURE Y73	Display	09ventsn	HANFORD CROSS SITE TRANSFER SYSTEM - PCU-3 - VENT STATION 6241-V
			Alarm Subsystem	Alarmed Tag	
PCU-3\PAH-3185_ACK	Digital	VALVE SOV-3185A/B FAILURE Y73 ACKNOWLEDGE	Alarm Acknowledge Bit Tag	PCU-3\PAH-3185	
PCU-3\PAHW-3126A	Digital	SUPERNATE LINE HIGH PRESSURE WARNING	Alarm Subsystem	Alarmed Tag	
PCU-3\PAHW-3126A_ACK	Digital	SUPERNATE LINE HIGH PRESSURE WARNING ACKNOWLEDGE	Alarm Acknowledge Bit Tag	PCU-3\PAHW-3126A	
PCU-3\PAL-3100B	Digital	LOW COMPRESSOR SA-CMP-3101B PRESSURE	Display	01overvw	HANFORD CROSS SITE TRANSFER SYSTEM - SYSTEM OVERVIEW DIAGRAM
			Display	09ventsn	HANFORD CROSS SITE TRANSFER SYSTEM - PCU-3 - VENT STATION 6241-V

Tag Name	Tag Type	Tag Description	Component Type	Component Name	Component Description
			Alarm Subsystem	Alarmed Tag	
PCU-3\PAL-3100B_ACK	Digital	LOW COMPRESSOR SA-CMP-3101B PRESSURE ACKNOWLEDGE	Alarm Acknowledge Bit Tag	PCU-3\PAL-3100B	
PCU-3\PCU3-SP-AI-6	Analog	SPARE ANALOG INPUT			
PCU-3\PCU3-SP-AI-6_A	Digital	PCU-3 INPUT ANALOG OVER OR UNDER RANGE ALARM			
PCU-3\PCU3-SP-AI-7	Analog	SPARE ANALOG INPUT			
PCU-3\PCU3-SP-AI-7_A	Digital	PCU-3 INPUT ANALOG OVER OR UNDER RANGE ALARM			
PCU-3\PCU3-SP-AI-8	Analog	SPARE ANALOG INPUT			
PCU-3\PCU3-SP-AI-8_A	Digital	PCU-3 INPUT ANALOG OVER OR UNDER RANGE ALARM			
PCU-3\PCU3-SP-I4-16	Digital	SPARE DIGITAL INPUT			
PCU-3\PCU3-SP-I4-17	Digital	SPARE DIGITAL INPUT			
PCU-3\PCU3-SP-I4-2	Digital	SPARE DIGITAL INPUT			
PCU-3\PCU3-SP-I4-3	Digital	SPARE DIGITAL INPUT			
PCU-3\PCU3-SP-O7-05	Digital	SPARE DIGITAL OUTPUT			
PCU-3\PCU3-SP-O7-06	Digital	SPARE DIGITAL OUTPUT			
PCU-3\PCU3-SP-O7-07	Digital	SPARE DIGITAL OUTPUT			
PCU-3\PCU3-SP-O7-10	Digital	SPARE DIGITAL OUTPUT			
PCU-3\PCU3-SP-O7-11	Digital	SPARE DIGITAL OUTPUT			
PCU-3\PCU3-SP-O7-12	Digital	SPARE DIGITAL OUTPUT			
PCU-3\PCU3-SP-O7-13	Digital	SPARE DIGITAL OUTPUT			
PCU-3\PCU3-SP-O7-14	Digital	SPARE DIGITAL OUTPUT			
PCU-3\PCU3-SP-O7-15	Digital	SPARE DIGITAL OUTPUT			
PCU-3\PCU3-SP-O7-16	Digital	SPARE DIGITAL OUTPUT			
PCU-3\PCU3-SP-O7-17	Digital	SPARE DIGITAL OUTPUT			
PCU-3\PCU3-SP-TI-2	Analog	SPARE THERMOCOUPLE INPUT			
PCU-3\PCU3-SP-TI-2_A	Digital	PCU-3 INPUT THERMOCOUPLE OVER OR UNDER RANGE ALARM			
PCU-3\PCU3-SP-TI-4	Analog	SPARE THERMOCOUPLE INPUT			
PCU-3\PCU3-SP-TI-4_A	Digital	PCU-3 INPUT THERMOCOUPLE OVER OR UNDER RANGE ALARM			
PCU-3\PCU3-SP-TI-5	Analog	SPARE THERMOCOUPLE INPUT			
PCU-3\PCU3-SP-TI-5_A	Digital	PCU-3 INPUT THERMOCOUPLE OVER OR UNDER RANGE ALARM			
PCU-3\PCU3-SP-TI-6	Analog	SPARE THERMOCOUPLE INPUT			
PCU-3\PCU3-SP-TI-6_A	Digital	PCU-3 INPUT THERMOCOUPLE OVER OR UNDER RANGE ALARM			
PCU-3\PCU3-SP-TI-7	Analog	SPARE THERMOCOUPLE INPUT			
PCU-3\PCU3-SP-TI-7_A	Digital	PCU-3 INPUT THERMOCOUPLE OVER OR UNDER RANGE ALARM			
PCU-3\PCU3-SP-TI-8	Analog	SPARE THERMOCOUPLE INPUT			
PCU-3\PCU3-SP-TI-8_A	Digital	PCU-3 INPUT THERMOCOUPLE OVER OR UNDER RANGE ALARM			
PCU-3\PI-3126A	Analog	LOSS OF VACUUM WT-SNL-3150	Display	09ventsn	HANFORD CROSS SITE TRANSFER SYSTEM - PCU-3 - VENT STATION 6241-V
			Data Log Setup	Cross Site	
			Data Log Setup	R_Transf	
PCU-3\PI-3126A_A	Digital	PCU-3 INPUT ANALOG OVER OR UNDER RANGE ALARM	Display	09ventsn	HANFORD CROSS SITE TRANSFER SYSTEM - PCU-3 - VENT STATION 6241-V
			Alarm Subsystem	Alarmed Tag	
PCU-3\PI-3126A_A_ACK	Digital	PCU-3 INPUT ANALOG OVER OR UNDER RANGE ALARM ACKNOWLEDGE	Alarm Acknowledge Bit Tag	PCU-3\PI-3126A_A	
PCU-3\PI-3126B	Analog	LOSS OF VACUUM WT-SLL-3160	Display	09ventsn	HANFORD CROSS SITE TRANSFER SYSTEM - PCU-3 - VENT STATION 6241-V
PCU-3\PI-3126B_A	Digital	PCU-3 INPUT ANALOG OVER OR UNDER RANGE ALARM	Display	09ventsn	HANFORD CROSS SITE TRANSFER SYSTEM - PCU-3 - VENT STATION 6241-V
			Macro	Alm_Suppress	
			Alarm Subsystem	Alarmed Tag	
PCU-3\PI-3126B_A_ACK	Digital	PCU-3 INPUT ANALOG OVER OR UNDER RANGE ALARM ACKNOWLEDGE	Alarm Acknowledge Bit Tag	PCU-3\PI-3126B_A	
PCU-3\PI-3167	Analog	VALVE SOV-3167A/B PRESSURE	Display	09ventsn	HANFORD CROSS SITE TRANSFER SYSTEM - PCU-3 - VENT STATION 6241-V
			Data Log Setup	Cross Site	
PCU-3\PI-3167_A	Digital	PCU-3 INPUT ANALOG OVER OR UNDER RANGE ALARM	Display	09ventsn	HANFORD CROSS SITE TRANSFER SYSTEM - PCU-3 - VENT STATION 6241-V
			Macro	Alm_Suppress	
			Alarm Subsystem	Alarmed Tag	
PCU-3\PI-3167_A_ACK	Digital	PCU-3 INPUT ANALOG OVER OR UNDER RANGE ALARM ACKNOWLEDGE	Alarm Acknowledge Bit Tag	PCU-3\PI-3167_A	
PCU-3\PI-3168	Analog	VALVE SOV-3168A/B PRESSURE	Display	09ventsn	HANFORD CROSS SITE TRANSFER SYSTEM - PCU-3 - VENT STATION 6241-V
PCU-3\PI-3168_A	Digital	PCU-3 INPUT ANALOG OVER OR UNDER RANGE ALARM	Display	09ventsn	HANFORD CROSS SITE TRANSFER SYSTEM - PCU-3 - VENT STATION 6241-V
			Macro	Alm_Suppress	

Tag Name	Tag Type	Tag Description	Component Type	Component Name	Component Description
			Alarm Subsystem	Alarmed Tag	
PCU-3\PI-3168_A_ACK	Digital	PCU-3 INPUT ANALOG OVER OR UNDER RANGE ALARM ACKNOWLEDGE	Alarm Acknowledge Bit Tag	PCU-3\PI-3168_A	
PCU-3\PI-3185	Analog	VALVE SOV-3185A/B PRESSURE	Display	09ventsn	HANFORD CROSS SITE TRANSFER SYSTEM - PCU-3 - VENT STATION 6241-V
			Data Log Setup	Cross Site	
PCU-3\PI-3185_A	Digital	PCU-3 INPUT ANALOG OVER OR UNDER RANGE ALARM	Display	09ventsn	HANFORD CROSS SITE TRANSFER SYSTEM - PCU-3 - VENT STATION 6241-V
			Alarm Subsystem	Alarmed Tag	
PCU-3\PI-3185_A_ACK	Digital	PCU-3 INPUT ANALOG OVER OR UNDER RANGE ALARM ACKNOWLEDGE	Alarm Acknowledge Bit Tag	PCU-3\PI-3185_A	
PCU-3\SOV-3165A1	Digital	OPEN VALVE SOV-3165A Y71			
PCU-3\SOV-3165A2	Digital	CLOSE VALVE SOV-3165A Y71			
PCU-3\SOV-3165B1	Digital	OPEN VALVE SOV-3165B Y71			
PCU-3\SOV-3165B2	Digital	CLOSE VALVE SOV-3165B Y71			
PCU-3\SOV-3166A1	Digital	OPEN VALVE SOV-3166A Y71			
PCU-3\SOV-3166A2	Digital	CLOSE VALVE SOV-3166A Y71			
PCU-3\SOV-3166B1	Digital	OPEN VALVE SOV-3166B Y71			
PCU-3\SOV-3166B2	Digital	CLOSE VALVE SOV-3166B Y88-1			
PCU-3\SOV-3167A1	Digital	OPEN VALVE SOV-3167A Y88-1			
PCU-3\SOV-3167A2	Digital	CLOSE VALVE SOV-3167A Y81-3			
PCU-3\SOV-3167B1	Digital	OPEN VALVE SOV-3167B Y88-1			
PCU-3\SOV-3167B2	Digital	CLOSE VALVE SOV-3167B Y88-1			
PCU-3\SOV-3168A1	Digital	OPEN VALVE SOV-3168A Y81-3			
PCU-3\SOV-3168A2	Digital	CLOSE VALVE SOV-3168A Y81-4			
PCU-3\SOV-3168B1	Digital	OPEN VALVE SOV-3168B Y81-4			
PCU-3\SOV-3168B2	Digital	CLOSE VALVE SOV-3168B Y81-1			
PCU-3\SOV-3185A1	Digital	OPEN VALVE SOV-3185A Y81-1			
PCU-3\SOV-3185A2	Digital	CLOSE VALVE SOV-3185A			
PCU-3\SOV-3185B1	Digital	OPEN VALVE SOV-3185B Y81-2			
PCU-3\SOV-3185B2	Digital	CLOSE VALVE SOV-3185B Y81-2			
PCU-3\TAH_CAB_PLC3	Digital	PLC-3 CABINET HIGH TEMPERATURE [OFF = ALARM]	Display	00Entry	TEST ENTRY
			Alarm Subsystem	Alarmed Tag	
PCU-3\TAH_CAB_PLC3_ACK	Digital	PLC-3 CABINET HIGH TEMPERATURE ACKNOWLEDGE	Alarm Acknowledge Bit Tag	PCU-3\TAH_CAB_PLC3	
PCU-3\TI-3126A	Analog	LINE WT-SNL-3150 TEMPERATURE	Display	09ventsn	HANFORD CROSS SITE TRANSFER SYSTEM - PCU-3 - VENT STATION 6241-V
			Data Log Setup	Cross Site	
PCU-3\TI-3126A_A	Digital	PCU-3 INPUT THERMOCOUPLE OVER OR UNDER RANGE ALARM	Display	09ventsn	HANFORD CROSS SITE TRANSFER SYSTEM - PCU-3 - VENT STATION 6241-V
			Alarm Subsystem	Alarmed Tag	
PCU-3\TI-3126A_A_ACK	Digital	PCU-3 INPUT THERMOCOUPLE OVER OR UNDER RANGE ALARM ACKNOWLEDGE	Alarm Acknowledge Bit Tag	PCU-3\TI-3126A_A	
PCU-3\TI-3126B	Analog	LINE WT-SLL-3160 TEMPERATURE	Display	09ventsn	HANFORD CROSS SITE TRANSFER SYSTEM - PCU-3 - VENT STATION 6241-V
PCU-3\TI-3126B_A	Digital	PCU-3 INPUT THERMOCOUPLE OVER OR UNDER RANGE ALARM	Display	09ventsn	HANFORD CROSS SITE TRANSFER SYSTEM - PCU-3 - VENT STATION 6241-V
			Alarm Subsystem	Alarmed Tag	
PCU-3\TI-3126B_A_ACK	Digital	PCU-3 INPUT THERMOCOUPLE OVER OR UNDER RANGE ALARM ACKNOWLEDGE	Alarm Acknowledge Bit Tag	PCU-3\TI-3126B_A	
PCU-3\TR_EN_1001	Digital	ENABLE TRANSFER 1 241-SY-A TO 241-A-B Y-70.1	Display	00Entry	TEST ENTRY
			Display	01overvw	HANFORD CROSS SITE TRANSFER SYSTEM - SYSTEM OVERVIEW DIAGRAM
			Events	System	Event file
PCU-3\TR_EN_1002A	Digital	ENABLE TRANSFER 2A 241-SY-B TO 241-A-A Y-70.1	Display	00Entry	TEST ENTRY
			Display	01overvw	HANFORD CROSS SITE TRANSFER SYSTEM - SYSTEM OVERVIEW DIAGRAM
			Events	System	Event file
PCU-3\TR_EN_1002B	Digital	ENABLE TRANSFER 2B 241-SY-B TO 241-A-A Y-70.1	Display	00Entry	TEST ENTRY
			Display	01overvw	HANFORD CROSS SITE TRANSFER SYSTEM - SYSTEM OVERVIEW DIAGRAM
			Events	System	Event file
PCU-3\TR_EN_1003	Digital	ENABLE TRANSFER 3 241-A-B TO 241-SY-A Y-70.1	Display	00Entry	TEST ENTRY
			Display	01overvw	HANFORD CROSS SITE TRANSFER SYSTEM - SYSTEM OVERVIEW DIAGRAM
			Events	System	Event file

Tag Name	Tag Type	Tag Description	Component Type	Component Name	Component Description
PCU-3\TR_ON_1001	Digital	TRANSFER 1 INITIATED Y-41.1	Display	00Entry	TEST ENTRY
			Display	00mode	HANFORD CROSS SITE TRANSFER SYSTEM - WELCOME AND TRANSFER MODE SELECTION SCREEN
			Display	01overvw	HANFORD CROSS SITE TRANSFER SYSTEM - SYSTEM OVERVIEW DIAGRAM
			Display	Mov-2p-d	Two Position Motor Operated Drain Valve Pop-Up
			Display	Mov-2pos	Two Position Motor Operated Valve Pop-Up
			Display	Mov-3pos	Three Position Motor Operated Valve Pop-Up
			Display	Sov-2pos	Two Position Solenoid Valve Pop-Up
			Data Log Setup	R_Transf	
PCU-3\TR_ON_1002A	Digital	TRANSFER 2A INITIATED Y-42.1	Display	00Entry	TEST ENTRY
			Display	00mode	HANFORD CROSS SITE TRANSFER SYSTEM - WELCOME AND TRANSFER MODE SELECTION SCREEN
			Display	01overvw	HANFORD CROSS SITE TRANSFER SYSTEM - SYSTEM OVERVIEW DIAGRAM
			Display	Mov-2p-d	Two Position Motor Operated Drain Valve Pop-Up
			Display	Mov-2pos	Two Position Motor Operated Valve Pop-Up
			Display	Mov-3pos	Three Position Motor Operated Valve Pop-Up
			Display	Sov-2pos	Two Position Solenoid Valve Pop-Up
			Data Log Setup	R_Transf	
PCU-3\TR_ON_1002B	Digital	TRANSFER 2B INITIATED Y-43.1	Display	00Entry	TEST ENTRY
			Display	00mode	HANFORD CROSS SITE TRANSFER SYSTEM - WELCOME AND TRANSFER MODE SELECTION SCREEN
			Display	01overvw	HANFORD CROSS SITE TRANSFER SYSTEM - SYSTEM OVERVIEW DIAGRAM
			Display	Mov-2p-d	Two Position Motor Operated Drain Valve Pop-Up
			Display	Mov-2pos	Two Position Motor Operated Valve Pop-Up
			Display	Mov-3pos	Three Position Motor Operated Valve Pop-Up
			Display	Sov-2pos	Two Position Solenoid Valve Pop-Up
			Data Log Setup	R_Transf	
PCU-3\TR_ON_1003	Digital	TRANSFER 3 INITIATED Y-44.1	Display	00Entry	TEST ENTRY
			Display	00mode	HANFORD CROSS SITE TRANSFER SYSTEM - WELCOME AND TRANSFER MODE SELECTION SCREEN
			Display	01overvw	HANFORD CROSS SITE TRANSFER SYSTEM - SYSTEM OVERVIEW DIAGRAM
			Display	Mov-2p-d	Two Position Motor Operated Drain Valve Pop-Up
			Display	Mov-2pos	Two Position Motor Operated Valve Pop-Up
			Display	Mov-3pos	Three Position Motor Operated Valve Pop-Up
			Display	Sov-2pos	Two Position Solenoid Valve Pop-Up
			Data Log Setup	R_Transf	
PCU-3\YA-3102A	Digital	ENCASEMENT RUPTURE DISK ACTIVATED [OFF = ALARM] OIT	Macro	Alm_Suppress	
			Alarm Subsystem	Alarmed Tag	
PCU-3\YA-3102A_ACK	Digital	ENCASEMENT RUPTURE DISK ACTIVATED [OFF = ALARM] OIT ACKNOWLEDGE	Alarm Acknowledge Bit Tag	PCU-3\YA-3102A	
PCU-3\YA-3102B	Digital	ENCASEMENT RUPTURE DISK ACTIVATED [OFF = ALARM] OIT	Alarm Subsystem	Alarmed Tag	
PCU-3\YA-3102B_ACK	Digital	ENCASEMENT RUPTURE DISK ACTIVATED [OFF = ALARM] OIT ACKNOWLEDGE	Alarm Acknowledge Bit Tag	PCU-3\YA-3102B	
PCU-3\YA-3102C	Digital	ENCASEMENT RUPTURE DISK ACTIVATED [OFF = ALARM] OIT	Alarm Subsystem	Alarmed Tag	
PCU-3\YA-3102C_ACK	Digital	ENCASEMENT RUPTURE DISK ACTIVATED [OFF = ALARM] OIT ACKNOWLEDGE	Alarm Acknowledge Bit Tag	PCU-3\YA-3102C	
PCU-3\YA-3102D	Digital	ENCASEMENT RUPTURE DISK ACTIVATED [OFF = ALARM] OIT	Alarm Subsystem	Alarmed Tag	
PCU-3\YA-3102D_ACK	Digital	ENCASEMENT RUPTURE DISK ACTIVATED [OFF = ALARM] OIT ACKNOWLEDGE	Alarm Acknowledge Bit Tag	PCU-3\YA-3102D	
PCU-3\ZA-3165A	Digital	VALVE POSITION SWITCH FAILURE Y71	Display	09ventsn	HANFORD CROSS SITE TRANSFER SYSTEM - PCU-3 - VENT STATION 6241-V
			Parameters	S3165a	

Tag Name	Tag Type	Tag Description	Component Type	Component Name	Component Description
			Derived Tags	Global	Derived Tag file
			Alarm Subsystem	Alarmed Tag	
PCU-3\ZA-3165A_ACK	Digital	VALVE POSITION SWITCH FAILURE Y71 ACKNOWLEDGE	Alarm Acknowledge Bit Tag	PCU-3\ZA-3165A	
PCU-3\ZA-3165A1	Digital	VALVE FAILED TO OPEN Y71	Display	09ventsn	HANFORD CROSS SITE TRANSFER SYSTEM - PCU-3 - VENT STATION 6241-V
			Parameters	S3165a	
			Derived Tags	Global	Derived Tag file
			Alarm Subsystem	Alarmed Tag	
PCU-3\ZA-3165A1_ACK	Digital	VALVE FAILED TO OPEN Y71 ACKNOWLEDGE	Alarm Acknowledge Bit Tag	PCU-3\ZA-3165A1	
PCU-3\ZA-3165A2	Digital	VALVE FAILED TO CLOSE Y71	Display	09ventsn	HANFORD CROSS SITE TRANSFER SYSTEM - PCU-3 - VENT STATION 6241-V
			Parameters	S3165a	
			Derived Tags	Global	Derived Tag file
			Alarm Subsystem	Alarmed Tag	
PCU-3\ZA-3165A2_ACK	Digital	VALVE FAILED TO CLOSE Y71 ACKNOWLEDGE	Alarm Acknowledge Bit Tag	PCU-3\ZA-3165A2	
PCU-3\ZA-3165B	Digital	VALVE POSITION SWITCH FAILURE Y71	Display	09ventsn	HANFORD CROSS SITE TRANSFER SYSTEM - PCU-3 - VENT STATION 6241-V
			Parameters	S3165b	
			Derived Tags	Global	Derived Tag file
			Alarm Subsystem	Alarmed Tag	
PCU-3\ZA-3165B_ACK	Digital	VALVE POSITION SWITCH FAILURE Y71 ACKNOWLEDGE	Alarm Acknowledge Bit Tag	PCU-3\ZA-3165B	
PCU-3\ZA-3165B1	Digital	VALVE FAILED TO OPEN Y71	Display	09ventsn	HANFORD CROSS SITE TRANSFER SYSTEM - PCU-3 - VENT STATION 6241-V
			Parameters	S3165b	
			Derived Tags	Global	Derived Tag file
			Alarm Subsystem	Alarmed Tag	
PCU-3\ZA-3165B1_ACK	Digital	VALVE FAILED TO OPEN Y71 ACKNOWLEDGE	Alarm Acknowledge Bit Tag	PCU-3\ZA-3165B1	
PCU-3\ZA-3165B2	Digital	VALVE FAILED TO CLOSE Y71	Display	09ventsn	HANFORD CROSS SITE TRANSFER SYSTEM - PCU-3 - VENT STATION 6241-V
			Parameters	S3165b	
			Derived Tags	Global	Derived Tag file
			Alarm Subsystem	Alarmed Tag	
PCU-3\ZA-3165B2_ACK	Digital	VALVE FAILED TO CLOSE Y71 ACKNOWLEDGE	Alarm Acknowledge Bit Tag	PCU-3\ZA-3165B2	
PCU-3\ZA-3166A	Digital	VALVE POSITION SWITCH FAILURE Y71	Display	09ventsn	HANFORD CROSS SITE TRANSFER SYSTEM - PCU-3 - VENT STATION 6241-V
			Parameters	S3166a	
			Derived Tags	Global	Derived Tag file
			Alarm Subsystem	Alarmed Tag	
PCU-3\ZA-3166A_ACK	Digital	VALVE POSITION SWITCH FAILURE Y71 ACKNOWLEDGE	Alarm Acknowledge Bit Tag	PCU-3\ZA-3166A	
PCU-3\ZA-3166A1	Digital	VALVE FAILED TO OPEN Y71	Display	09ventsn	HANFORD CROSS SITE TRANSFER SYSTEM - PCU-3 - VENT STATION 6241-V
			Parameters	S3166a	
			Derived Tags	Global	Derived Tag file
			Alarm Subsystem	Alarmed Tag	
PCU-3\ZA-3166A1_ACK	Digital	VALVE FAILED TO OPEN Y71 ACKNOWLEDGE	Alarm Acknowledge Bit Tag	PCU-3\ZA-3166A1	
PCU-3\ZA-3166A2	Digital	VALVE FAILED TO CLOSE Y71	Display	09ventsn	HANFORD CROSS SITE TRANSFER SYSTEM - PCU-3 - VENT STATION 6241-V
			Parameters	S3166a	
			Derived Tags	Global	Derived Tag file
			Alarm Subsystem	Alarmed Tag	
PCU-3\ZA-3166A2_ACK	Digital	VALVE FAILED TO CLOSE Y71 ACKNOWLEDGE	Alarm Acknowledge Bit Tag	PCU-3\ZA-3166A2	
PCU-3\ZA-3166B	Digital	VALVE POSITION SWITCH FAILURE Y71	Display	09ventsn	HANFORD CROSS SITE TRANSFER SYSTEM - PCU-3 - VENT STATION 6241-V
			Parameters	S3166b	
			Derived Tags	Global	Derived Tag file
			Alarm Subsystem	Alarmed Tag	
PCU-3\ZA-3166B_ACK	Digital	VALVE POSITION SWITCH FAILURE Y71 ACKNOWLEDGE	Alarm Acknowledge Bit Tag	PCU-3\ZA-3166B	
PCU-3\ZA-3166B1	Digital	VALVE FAILED TO OPEN Y71	Display	09ventsn	HANFORD CROSS SITE TRANSFER SYSTEM - PCU-3 - VENT STATION 6241-V
			Parameters	S3166b	
			Derived Tags	Global	Derived Tag file
			Alarm Subsystem	Alarmed Tag	
PCU-3\ZA-3166B1_ACK	Digital	VALVE FAILED TO OPEN Y71 ACKNOWLEDGE	Alarm Acknowledge Bit Tag	PCU-3\ZA-3166B1	

Tag Name	Tag Type	Tag Description	Component Type	Component Name	Component Description
PCU-3\ZA-3166B2	Digital	VALVE FAILED TO CLOSE Y71	Display	09ventsn	HANFORD CROSS SITE TRANSFER SYSTEM - PCU-3 - VENT STATION 6241-V
			Parameters	S3166b	
			Derived Tags	Global	Derived Tag file
			Alarm Subsystem	Alarmed Tag	
PCU-3\ZA-3166B2_ACK	Digital	VALVE FAILED TO CLOSE Y71 ACKNOWLEDGE	Alarm Acknowledge Bit Tag	PCU-3\ZA-3166B2	
PCU-3\ZA-3167A	Digital	VALVE POSITION SWITCH FAILURE Y88-1	Display	09ventsn	HANFORD CROSS SITE TRANSFER SYSTEM - PCU-3 - VENT STATION 6241-V
			Parameters	S3167a	
			Derived Tags	Global	Derived Tag file
			Alarm Subsystem	Alarmed Tag	
PCU-3\ZA-3167A_ACK	Digital	VALVE POSITION SWITCH FAILURE Y88-1 ACKNOWLEDGE	Alarm Acknowledge Bit Tag	PCU-3\ZA-3167A	
PCU-3\ZA-3167A1	Digital	VALVE FAILED TO OPEN Y88-1	Display	09ventsn	HANFORD CROSS SITE TRANSFER SYSTEM - PCU-3 - VENT STATION 6241-V
			Parameters	S3167a	
			Derived Tags	Global	Derived Tag file
			Alarm Subsystem	Alarmed Tag	
PCU-3\ZA-3167A1_ACK	Digital	VALVE FAILED TO OPEN Y88-1 ACKNOWLEDGE	Alarm Acknowledge Bit Tag	PCU-3\ZA-3167A1	
PCU-3\ZA-3167A2	Digital	VALVE FAILED TO CLOSE Y88-1	Display	09ventsn	HANFORD CROSS SITE TRANSFER SYSTEM - PCU-3 - VENT STATION 6241-V
			Parameters	S3167a	
			Derived Tags	Global	Derived Tag file
			Alarm Subsystem	Alarmed Tag	
PCU-3\ZA-3167A2_ACK	Digital	VALVE FAILED TO CLOSE Y88-1 ACKNOWLEDGE	Alarm Acknowledge Bit Tag	PCU-3\ZA-3167A2	
PCU-3\ZA-3167B	Digital	VALVE POSITION SWITCH FAILURE Y88-2	Display	09ventsn	HANFORD CROSS SITE TRANSFER SYSTEM - PCU-3 - VENT STATION 6241-V
			Parameters	S3167b	
			Derived Tags	Global	Derived Tag file
			Alarm Subsystem	Alarmed Tag	
PCU-3\ZA-3167B_ACK	Digital	VALVE POSITION SWITCH FAILURE Y88-2 ACKNOWLEDGE	Alarm Acknowledge Bit Tag	PCU-3\ZA-3167B	
PCU-3\ZA-3167B1	Digital	VALVE FAILED TO OPEN Y88-2	Display	09ventsn	HANFORD CROSS SITE TRANSFER SYSTEM - PCU-3 - VENT STATION 6241-V
			Parameters	S3167b	
			Derived Tags	Global	Derived Tag file
			Alarm Subsystem	Alarmed Tag	
PCU-3\ZA-3167B1_ACK	Digital	VALVE FAILED TO OPEN Y88-2 ACKNOWLEDGE	Alarm Acknowledge Bit Tag	PCU-3\ZA-3167B1	
PCU-3\ZA-3167B2	Digital	VALVE FAILED TO CLOSE Y88-2	Display	09ventsn	HANFORD CROSS SITE TRANSFER SYSTEM - PCU-3 - VENT STATION 6241-V
			Parameters	S3167b	
			Derived Tags	Global	Derived Tag file
			Alarm Subsystem	Alarmed Tag	
PCU-3\ZA-3167B2_ACK	Digital	VALVE FAILED TO CLOSE Y88-2 ACKNOWLEDGE	Alarm Acknowledge Bit Tag	PCU-3\ZA-3167B2	
PCU-3\ZA-3168A	Digital	VALVE POSITION SWITCH FAILURE Y81-3	Display	09ventsn	HANFORD CROSS SITE TRANSFER SYSTEM - PCU-3 - VENT STATION 6241-V
			Parameters	S3168a	
			Derived Tags	Global	Derived Tag file
			Alarm Subsystem	Alarmed Tag	
PCU-3\ZA-3168A_ACK	Digital	VALVE POSITION SWITCH FAILURE Y81-3 ACKNOWLEDGE	Alarm Acknowledge Bit Tag	PCU-3\ZA-3168A	
PCU-3\ZA-3168A1	Digital	VALVE FAILED TO OPEN Y81-3	Display	09ventsn	HANFORD CROSS SITE TRANSFER SYSTEM - PCU-3 - VENT STATION 6241-V
			Parameters	S3168a	
			Derived Tags	Global	Derived Tag file
			Alarm Subsystem	Alarmed Tag	
PCU-3\ZA-3168A1_ACK	Digital	VALVE FAILED TO OPEN Y81-3 ACKNOWLEDGE	Alarm Acknowledge Bit Tag	PCU-3\ZA-3168A1	
PCU-3\ZA-3168A2	Digital	VALVE FAILED TO CLOSE Y81-3	Display	09ventsn	HANFORD CROSS SITE TRANSFER SYSTEM - PCU-3 - VENT STATION 6241-V
			Parameters	S3168a	
			Derived Tags	Global	Derived Tag file
			Alarm Subsystem	Alarmed Tag	
PCU-3\ZA-3168A2_ACK	Digital	VALVE FAILED TO CLOSE Y81-3 ACKNOWLEDGE	Alarm Acknowledge Bit Tag	PCU-3\ZA-3168A2	
PCU-3\ZA-3168B	Digital	VALVE POSITION SWITCH FAILURE Y81-4	Display	09ventsn	HANFORD CROSS SITE TRANSFER SYSTEM - PCU-3 - VENT STATION 6241-V
			Parameters	S3168b	

Tag Name	Tag Type	Tag Description	Component Type	Component Name	Component Description
			Derived Tags	Global	Derived Tag file
			Alarm Subsystem	Alarmed Tag	
PCU-3\ZA-3168B_ACK	Digital	VALVE POSITION SWITCH FAILURE Y81-4 ACKNOWLEDGE	Alarm Acknowledge Bit Tag	PCU-3\ZA-3168B	
PCU-3\ZA-3168B1	Digital	VALVE FAILED TO OPEN Y81-4	Display	09ventsn	HANFORD CROSS SITE TRANSFER SYSTEM - PCU-3 - VENT STATION 6241-V
			Parameters	S3168b	
			Derived Tags	Global	Derived Tag file
			Alarm Subsystem	Alarmed Tag	
PCU-3\ZA-3168B1_ACK	Digital	VALVE FAILED TO OPEN Y81-4 ACKNOWLEDGE	Alarm Acknowledge Bit Tag	PCU-3\ZA-3168B1	
PCU-3\ZA-3168B2	Digital	VALVE FAILED TO CLOSE Y81-4	Display	09ventsn	HANFORD CROSS SITE TRANSFER SYSTEM - PCU-3 - VENT STATION 6241-V
			Parameters	S3168b	
			Derived Tags	Global	Derived Tag file
			Alarm Subsystem	Alarmed Tag	
PCU-3\ZA-3168B2_ACK	Digital	VALVE FAILED TO CLOSE Y81-4 ACKNOWLEDGE	Alarm Acknowledge Bit Tag	PCU-3\ZA-3168B2	
PCU-3\ZA-3185A	Digital	VALVE POSITION SWITCH FAILURE Y81-1	Display	09ventsn	HANFORD CROSS SITE TRANSFER SYSTEM - PCU-3 - VENT STATION 6241-V
			Parameters	S3185a	
			Derived Tags	Global	Derived Tag file
			Alarm Subsystem	Alarmed Tag	
PCU-3\ZA-3185A_ACK	Digital	VALVE POSITION SWITCH FAILURE Y81-1 ACKNOWLEDGE	Alarm Acknowledge Bit Tag	PCU-3\ZA-3185A	
PCU-3\ZA-3185A1	Digital	VALVE FAILED TO OPEN Y81-1	Display	09ventsn	HANFORD CROSS SITE TRANSFER SYSTEM - PCU-3 - VENT STATION 6241-V
			Parameters	S3185a	
			Derived Tags	Global	Derived Tag file
			Alarm Subsystem	Alarmed Tag	
PCU-3\ZA-3185A1_ACK	Digital	VALVE FAILED TO OPEN Y81-1 ACKNOWLEDGE	Alarm Acknowledge Bit Tag	PCU-3\ZA-3185A1	
PCU-3\ZA-3185A2	Digital	VALVE FAILED TO CLOSE Y81-1	Display	09ventsn	HANFORD CROSS SITE TRANSFER SYSTEM - PCU-3 - VENT STATION 6241-V
			Parameters	S3185a	
			Derived Tags	Global	Derived Tag file
			Alarm Subsystem	Alarmed Tag	
PCU-3\ZA-3185A2_ACK	Digital	VALVE FAILED TO CLOSE Y81-1 ACKNOWLEDGE	Alarm Acknowledge Bit Tag	PCU-3\ZA-3185A2	
PCU-3\ZA-3185B	Digital	VALVE POSITION SWITCH FAILURE Y81-2	Display	09ventsn	HANFORD CROSS SITE TRANSFER SYSTEM - PCU-3 - VENT STATION 6241-V
			Parameters	S3185b	
			Derived Tags	Global	Derived Tag file
			Alarm Subsystem	Alarmed Tag	
PCU-3\ZA-3185B_ACK	Digital	VALVE POSITION SWITCH FAILURE Y81-2 ACKNOWLEDGE	Alarm Acknowledge Bit Tag	PCU-3\ZA-3185B	
PCU-3\ZA-3185B1	Digital	VALVE FAILED TO OPEN Y81-2	Display	09ventsn	HANFORD CROSS SITE TRANSFER SYSTEM - PCU-3 - VENT STATION 6241-V
			Parameters	S3185b	
			Derived Tags	Global	Derived Tag file
			Alarm Subsystem	Alarmed Tag	
PCU-3\ZA-3185B1_ACK	Digital	VALVE FAILED TO OPEN Y81-2 ACKNOWLEDGE	Alarm Acknowledge Bit Tag	PCU-3\ZA-3185B1	
PCU-3\ZA-3185B2	Digital	VALVE FAILED TO CLOSE Y81-2	Display	09ventsn	HANFORD CROSS SITE TRANSFER SYSTEM - PCU-3 - VENT STATION 6241-V
			Parameters	S3185b	
			Derived Tags	Global	Derived Tag file
			Alarm Subsystem	Alarmed Tag	
PCU-3\ZA-3185B2_ACK	Digital	VALVE FAILED TO CLOSE Y81-2 ACKNOWLEDGE	Alarm Acknowledge Bit Tag	PCU-3\ZA-3185B2	
PCU-3\ZA-VALVES	Digital	PCU-3 VALVE FAILURE FOR OVERVIEW SCREEN INDICATION	Display	01overvw	HANFORD CROSS SITE TRANSFER SYSTEM - SYSTEM OVERVIEW DIAGRAM
			Derived Tags	Global	Derived Tag file
PCU-3\ZLH-3165A	Digital	SOV-3165A IS OPEN Y70	Display	09ventsn	HANFORD CROSS SITE TRANSFER SYSTEM - PCU-3 - VENT STATION 6241-V
			Parameters	S3165a	
PCU-3\ZLH-3165B	Digital	SOV-3165B IS OPEN Y70	Display	09ventsn	HANFORD CROSS SITE TRANSFER SYSTEM - PCU-3 - VENT STATION 6241-V
			Parameters	S3165b	
PCU-3\ZLH-3166A	Digital	SOV-3166A IS OPEN Y70	Display	09ventsn	HANFORD CROSS SITE TRANSFER SYSTEM - PCU-3 - VENT STATION 6241-V
			Parameters	S3166a	

Tag Name	Tag Type	Tag Description	Component Type	Component Name	Component Description
PCU-3\ZLH-3166B	Digital	SOV-3166B IS OPEN Y70	Display	09ventsn	HANFORD CROSS SITE TRANSFER SYSTEM - PCU-3 - VENT STATION 6241-V
			Parameters	S3166b	
PCU-3\ZLH-3167A	Digital	SOV-3167A IS OPEN Y88-1	Display	09ventsn	HANFORD CROSS SITE TRANSFER SYSTEM - PCU-3 - VENT STATION 6241-V
			Parameters	S3167a	
PCU-3\ZLH-3167B	Digital	SOV-3167B IS OPEN Y-88.2	Display	09ventsn	HANFORD CROSS SITE TRANSFER SYSTEM - PCU-3 - VENT STATION 6241-V
			Parameters	S3167b	
PCU-3\ZLH-3168A	Digital	SOV-3168A IS OPEN Y81-3	Display	09ventsn	HANFORD CROSS SITE TRANSFER SYSTEM - PCU-3 - VENT STATION 6241-V
			Parameters	S3168a	
PCU-3\ZLH-3168B	Digital	SOV-3168B IS OPEN Y-81-4	Display	09ventsn	HANFORD CROSS SITE TRANSFER SYSTEM - PCU-3 - VENT STATION 6241-V
			Parameters	S3168b	
PCU-3\ZLH-3185A	Digital	SOV-3185A IS OPEN Y81-1	Display	09ventsn	HANFORD CROSS SITE TRANSFER SYSTEM - PCU-3 - VENT STATION 6241-V
			Parameters	S3185a	
PCU-3\ZLH-3185B	Digital	SOV-3185B IS OPEN Y81-2	Display	09ventsn	HANFORD CROSS SITE TRANSFER SYSTEM - PCU-3 - VENT STATION 6241-V
			Parameters	S3185b	
PCU-3\ZLL-3165A	Digital	SOV-3165A IS CLOSED Y70	Display	09ventsn	HANFORD CROSS SITE TRANSFER SYSTEM - PCU-3 - VENT STATION 6241-V
			Parameters	S3165a	
PCU-3\ZLL-3165B	Digital	SOV-3165B IS CLOSED Y70	Display	09ventsn	HANFORD CROSS SITE TRANSFER SYSTEM - PCU-3 - VENT STATION 6241-V
			Parameters	S3165b	
PCU-3\ZLL-3166A	Digital	SOV-3166A IS CLOSED Y70	Display	09ventsn	HANFORD CROSS SITE TRANSFER SYSTEM - PCU-3 - VENT STATION 6241-V
			Parameters	S3166a	
PCU-3\ZLL-3166B	Digital	SOV-3166B IS CLOSED Y70	Display	09ventsn	HANFORD CROSS SITE TRANSFER SYSTEM - PCU-3 - VENT STATION 6241-V
			Parameters	S3166b	
PCU-3\ZLL-3167A	Digital	SOV-3167A IS CLOSED Y88-1	Display	09ventsn	HANFORD CROSS SITE TRANSFER SYSTEM - PCU-3 - VENT STATION 6241-V
			Parameters	S3167a	
PCU-3\ZLL-3167B	Digital	SOV-3167B IS CLOSED Y-88.2	Display	09ventsn	HANFORD CROSS SITE TRANSFER SYSTEM - PCU-3 - VENT STATION 6241-V
			Parameters	S3167b	
PCU-3\ZLL-3168A	Digital	SOV-3168A IS CLOSED Y81-3	Display	09ventsn	HANFORD CROSS SITE TRANSFER SYSTEM - PCU-3 - VENT STATION 6241-V
			Parameters	S3168a	
PCU-3\ZLL-3168B	Digital	SOV-3168B IS CLOSED Y-81-4	Display	09ventsn	HANFORD CROSS SITE TRANSFER SYSTEM - PCU-3 - VENT STATION 6241-V
			Parameters	S3168b	
PCU-3\ZLL-3185A	Digital	SOV-3185A IS CLOSED Y81-1	Display	09ventsn	HANFORD CROSS SITE TRANSFER SYSTEM - PCU-3 - VENT STATION 6241-V
			Parameters	S3185a	
PCU-3\ZLL-3185B	Digital	SOV-3185B IS CLOSED Y81-2	Display	09ventsn	HANFORD CROSS SITE TRANSFER SYSTEM - PCU-3 - VENT STATION 6241-V
			Parameters	S3185b	
PCU-4\0_OFF	Digital	ALWAYS OFF PLACE HOLDER FOR PCU-4 VARIABLES			
PCU-4\BATT_BAD_PLC4	Digital	PLC-4 BATTERY IS BAD OR MISSING	Tag Monitor	HeartBeat	
			Display	00Entry	TEST ENTRY
			Display	01overvw	HANFORD CROSS SITE TRANSFER SYSTEM - SYSTEM OVERVIEW DIAGRAM
			Alarm Subsystem	Alarmed Tag	
PCU-4\BATT_BAD_PLC4_ACK	Digital	PLC-4 BATTERY IS BAD OR MISSING ACKNOWLEDGE	Alarm Acknowledge Bit Tag	PCU-4\BATT_BAD_PLC4	

Tag Name	Tag Type	Tag Description	Component Type	Component Name	Component Description
PCU-4\COM-4_OCS	Digital	COMMUN. WITH OCS IGNORED	Tag Monitor	HeartBeat	
			Display	01overvw	HANFORD CROSS SITE TRANSFER SYSTEM - SYSTEM OVERVIEW DIAGRAM
			Macro	Alm_Suppress	
			Alarm Subsystem	Alarmed Tag	
PCU-4\COM-4_OCS_ACK	Digital	COMMUN. WITH OCS IGNORED ACKNOWLEDGE	Alarm Acknowledge Bit Tag	PCU-4\COM-4_OCS	
PCU-4\COM-41	Digital	COMMUN. WITH PCU-1 IGNORED	Display	01overvw	HANFORD CROSS SITE TRANSFER SYSTEM - SYSTEM OVERVIEW DIAGRAM
			Alarm Subsystem	Alarmed Tag	
PCU-4\COM-41_ACK	Digital	COMMUN. WITH PCU-1 IGNORED ACKNOWLEDGE	Alarm Acknowledge Bit Tag	PCU-4\COM-41	
PCU-4\COM-42	Digital	COMMUN. WITH PCU-2 IGNORED	Display	01overvw	HANFORD CROSS SITE TRANSFER SYSTEM - SYSTEM OVERVIEW DIAGRAM
			Alarm Subsystem	Alarmed Tag	
PCU-4\COM-42_ACK	Digital	COMMUN. WITH PCU-2 IGNORED ACKNOWLEDGE	Alarm Acknowledge Bit Tag	PCU-4\COM-42	
PCU-4\COM-43	Digital	COMMUN. WITH PCU-3 IGNORED	Display	01overvw	HANFORD CROSS SITE TRANSFER SYSTEM - SYSTEM OVERVIEW DIAGRAM
			Alarm Subsystem	Alarmed Tag	
PCU-4\COM-43_ACK	Digital	COMMUN. WITH PCU-3 IGNORED ACKNOWLEDGE	Alarm Acknowledge Bit Tag	PCU-4\COM-43	
PCU-4\COM-45	Digital	COMMUN. WITH PCU-5 IGNORED	Display	00Entry	TEST ENTRY
			Display	01overvw	HANFORD CROSS SITE TRANSFER SYSTEM - SYSTEM OVERVIEW DIAGRAM
			Alarm Subsystem	Alarmed Tag	
PCU-4\COM-45_ACK	Digital	COMMUN. WITH PCU-5 IGNORED ACKNOWLEDGE	Alarm Acknowledge Bit Tag	PCU-4\COM-45	
PCU-4\COM-OCS_4	Digital	COMMUN. WITH PCU-4 IGNORED - DETECTED AT OCS	Display	01overvw	HANFORD CROSS SITE TRANSFER SYSTEM - SYSTEM OVERVIEW DIAGRAM
			Events	Mt_hb	Communications Heart Beat Event file
			Events	System	Event file
			Alarm Subsystem	Alarmed Tag	
PCU-4\COM-OCS_4_ACK	Digital	COMMUN. WITH PCU-4 IGNORED - DETECTED AT OCS ACKNOWLEDGE	Alarm Acknowledge Bit Tag	PCU-4\COM-OCS_4	
PCU-4\COM_OCS_4_MNT	Digital	Communiations failure with the PLC detected in this OIT	Derived Tags	Mt_hb	Derived Tag file
			Alarm Subsystem	Alarmed Tag	
PCU-4\COM_OCS_4_OPR	Digital	Communiations failure with the PLC detected in this OIT	Derived Tags	Op_hb	Derived Tag file
			Alarm Subsystem	Alarmed Tag	
PCU-4\DI-850	Analog	DENSITY READING OF 244-A SUMP	Display	10liftsn	HANFORD CROSS SITE TRANSFER SYSTEM - PCU-4 - 244A LIFT STATION
PCU-4\DI-850_A	Digital	PCU-4 INPUT ANALOG OVER OR UNDER RANGE ALARM	Display	10liftsn	HANFORD CROSS SITE TRANSFER SYSTEM - PCU-4 - 244A LIFT STATION
			Macro	Alm_Suppress	
			Alarm Subsystem	Alarmed Tag	
PCU-4\DI-850_A_ACK	Digital	PCU-4 INPUT ANALOG OVER OR UNDER RANGE ALARM ACKNOWLEDGE	Alarm Acknowledge Bit Tag	PCU-4\DI-850_A	
PCU-4\DI-853	Analog	DENSITY READING OF 244-A CATCH TANK	Display	10liftsn	HANFORD CROSS SITE TRANSFER SYSTEM - PCU-4 - 244A LIFT STATION
PCU-4\DI-853_A	Digital	PCU-4 INPUT ANALOG OVER OR UNDER RANGE ALARM	Display	10liftsn	HANFORD CROSS SITE TRANSFER SYSTEM - PCU-4 - 244A LIFT STATION
			Alarm Subsystem	Alarmed Tag	
PCU-4\DI-853_A_ACK	Digital	PCU-4 INPUT ANALOG OVER OR UNDER RANGE ALARM ACKNOWLEDGE	Alarm Acknowledge Bit Tag	PCU-4\DI-853_A	
PCU-4\FAL-851	Digital	STACK 296-A-25 LOW FLOW	Alarm Subsystem	Alarmed Tag	
PCU-4\FAL-851_ACK	Digital	STACK 296-A-25 LOW FLOW ACKNOWLEDGE	Alarm Acknowledge Bit Tag	PCU-4\FAL-851	
PCU-4\HB_COMM_CNT	Analog	Communications checking counter	Tag Monitor	HeartBeat	
			Derived Tags	Comm_Check	Derived Tag file
PCU-4\HB_COMM_OK	Digital	Communications from PLC currently OK	Tag Monitor	HeartBeat	
			Derived Tags	Comm_Check	Derived Tag file
			Derived Tags	Mt_hb	Derived Tag file
			Derived Tags	Op_hb	Derived Tag file
PCU-4\HB_COMM_TIME	Analog	ACCUMULATED TIME FOR THE COMMUNICATION CHECK HEART-BEAT	Events	Mt_hb	Communications Heart Beat Event file

Tag Name	Tag Type	Tag Description	Component Type	Component Name	Component Description
PCU-4\HB_OCS_PLC4	Digital	HEARTBEAT FROM OCS TO PLC-4	Tag Monitor	HeartBeat	
			Events	Mt_hb	Communications Heart Beat Event file
			Events	System	Event file
PCU-4\HB_OCS_PLC4_MNT	Analog	COMMUN. HEARTBEAT REGISTER FROM MAINTENANCE OIT TO PCU-4	Derived Tags	Mt_hb	Derived Tag file
PCU-4\HB_OCS_PLC4_OPR	Analog	COMMUN. HEARTBEAT REGISTER FROM OPERATIONS OIT TO PCU-4	Derived Tags	Op_hb	Derived Tag file
PCU-4\HB_PLC4_OCS	Digital	HEARTBEAT FROM PLC-4 TO OCS	Tag Monitor	HeartBeat	
			Events	Mt_hb	Communications Heart Beat Event file
			Events	System	Event file
PCU-4\HB_PLC4_OCS_BOTH	Analog	COMMUN. HEARTBEAT REGISTER FROM PCU-4 TO BOTH OPERATOR TERMINALS	Tag Monitor	HeartBeat	
			Derived Tags	Comm_Check	Derived Tag file
			Derived Tags	Comm_Reset	Derived Tag file
PCU-4\HB_REF	Analog	Communications heartbeat reference register	Tag Monitor	HeartBeat	
			Derived Tags	Comm_Check	Derived Tag file
			Derived Tags	Comm_Reset	Derived Tag file
PCU-4\HS-058E	Digital	OVERRIDE OF 200-E MASTER SHUTDOWN Y-77.1			
PCU-4\LDA-3163	Digital	244-A TO AN ENC. LEAK DETECTION [OFF = ALARM]	Display	01overvw	HANFORD CROSS SITE TRANSFER SYSTEM - SYSTEM OVERVIEW DIAGRAM
			Display	10liftsn	HANFORD CROSS SITE TRANSFER SYSTEM - PCU-4 - 244A LIFT STATION
			Alarm Subsystem	Alarmed Tag	
PCU-4\LDA-3163_ACK	Digital	244-A TO AN ENC. LEAK DETECTION [OFF = ALARM] ACKNOWLEDGE	Alarm Acknowledge Bit Tag	PCU-4\LDA-3163	
PCU-4\LDA-841	Digital	244-A PUMP PIT LEAK DETECTION (OFF=ALARM) Y72	Display	10liftsn	HANFORD CROSS SITE TRANSFER SYSTEM - PCU-4 - 244A LIFT STATION
			Alarm Subsystem	Alarmed Tag	
PCU-4\LDA-841_ACK	Digital	244-A PUMP PIT LEAK DETECTION Y72 ACKNOWLEDGE	Alarm Acknowledge Bit Tag	PCU-4\LDA-841	
PCU-4\LI-850	Analog	244-A SUMP LEVEL READING	Display	10liftsn	HANFORD CROSS SITE TRANSFER SYSTEM - PCU-4 - 244A LIFT STATION
			Data Log Setup	R_Transf	
PCU-4\LI-850_A	Digital	PCU-4 INPUT ANALOG OVER OR UNDER RANGE ALARM	Display	10liftsn	HANFORD CROSS SITE TRANSFER SYSTEM - PCU-4 - 244A LIFT STATION
			Alarm Subsystem	Alarmed Tag	
PCU-4\LI-850_A_ACK	Digital	PCU-4 INPUT ANALOG OVER OR UNDER RANGE ALARM ACKNOWLEDGE	Alarm Acknowledge Bit Tag	PCU-4\LI-850_A	
PCU-4\LI-853	Analog	244-A CATCH TANK LEVEL READING	Display	10liftsn	HANFORD CROSS SITE TRANSFER SYSTEM - PCU-4 - 244A LIFT STATION
			Data Log Setup	R_Transf	
PCU-4\LI-853_A	Digital	PCU-4 INPUT ANALOG OVER OR UNDER RANGE ALARM	Display	10liftsn	HANFORD CROSS SITE TRANSFER SYSTEM - PCU-4 - 244A LIFT STATION
			Alarm Subsystem	Alarmed Tag	
PCU-4\LI-853_A_ACK	Digital	PCU-4 INPUT ANALOG OVER OR UNDER RANGE ALARM ACKNOWLEDGE	Alarm Acknowledge Bit Tag	PCU-4\LI-853_A	
PCU-4\P-200E-SPM	Digital	START PERM. CONTACT FOR 200-E TRANSF. PUMP Y-44.1			
PCU-4\PAH-842	Digital	SUPERNATE LINE HIGH PRESSURE	Alarm Subsystem	Alarmed Tag	
PCU-4\PAH-842_ACK	Digital	SUPERNATE LINE HIGH PRESSURE ACKNOWLEDGE	Alarm Acknowledge Bit Tag	PCU-4\PAH-842	
PCU-4\PCU-4-SP-I3-0	Digital	SPARE DIGITAL INPUT			
PCU-4\PCU-4-SP-I3-10	Digital	SPARE DIGITAL INPUT			
PCU-4\PCU-4-SP-I3-11	Digital	SPARE DIGITAL INPUT			
PCU-4\PCU-4-SP-I3-2	Digital	SPARE DIGITAL INPUT			
PCU-4\PCU-4-SP-I3-3	Digital	SPARE DIGITAL INPUT			
PCU-4\PCU-4-SP-I3-4	Digital	SPARE DIGITAL INPUT			
PCU-4\PCU-4-SP-I3-5	Digital	SPARE DIGITAL INPUT			
PCU-4\PCU-4-SP-I3-6	Digital	SPARE DIGITAL INPUT			
PCU-4\PCU-4-SP-I3-7	Digital	SPARE DIGITAL INPUT			
PCU-4\PCU-4-SP-I3-8	Digital	SPARE DIGITAL INPUT			
PCU-4\PCU-4-SP-I3-9	Digital	SPARE DIGITAL INPUT			
PCU-4\PCU4-SP-O7-0	Digital	SPARE DIGITAL OUTPUT			
PCU-4\PCU4-SP-O7-1	Digital	SPARE DIGITAL OUTPUT			
PCU-4\PCU4-SP-O7-13	Digital	SPARE DIGITAL OUTPUT			
PCU-4\PCU4-SP-O7-14	Digital	SPARE DIGITAL OUTPUT			
PCU-4\PCU4-SP-O7-15	Digital	SPARE DIGITAL OUTPUT			
PCU-4\PCU4-SP-O7-16	Digital	SPARE DIGITAL OUTPUT			
PCU-4\PCU4-SP-O7-17	Digital	SPARE DIGITAL OUTPUT			

Tag Name	Tag Type	Tag Description	Component Type	Component Name	Component Description
PCU-4\PCU4-SP-O7-2	Digital	SPARE DIGITAL OUTPUT			
PCU-4\PCU4-SP-O7-3	Digital	SPARE DIGITAL OUTPUT			
PCU-4\PCU4-SP-O7-4	Digital	SPARE DIGITAL OUTPUT			
PCU-4\PCU4-SP-O7-5	Digital	SPARE DIGITAL OUTPUT			
PCU-4\PCU4-SP-O7-6	Digital	SPARE DIGITAL OUTPUT			
PCU-4\PCU4-SP-O7-7	Digital	SPARE DIGITAL OUTPUT			
PCU-4\PCU4-SP-O7-8	Digital	SPARE DIGITAL OUTPUT			
PCU-4\PCU4-SP-O7-9	Digital	SPARE DIGITAL OUTPUT			
PCU-4\PCU4-SP-TI-2	Analog	SPARE THERMOCOUPLE INPUT			
PCU-4\PCU4-SP-TI-2_A	Digital	PCU-4 INPUT THERMOCOUPLE OVER OR UNDER RANGE ALARM			
PCU-4\PCU4-SP-TI-4	Analog	SPARE THERMOCOUPLE INPUT			
PCU-4\PCU4-SP-TI-4_A	Digital	PCU-4 INPUT THERMOCOUPLE OVER OR UNDER RANGE ALARM			
PCU-4\PCU4-SP-TI-5	Analog	SPARE THERMOCOUPLE INPUT			
PCU-4\PCU4-SP-TI-5_A	Digital	PCU-4 INPUT THERMOCOUPLE OVER OR UNDER RANGE ALARM			
PCU-4\PCU4-SP-TI-6	Analog	SPARE THERMOCOUPLE INPUT			
PCU-4\PCU4-SP-TI-6_A	Digital	PCU-4 INPUT THERMOCOUPLE OVER OR UNDER RANGE ALARM			
PCU-4\PCU4-SP-TI-7	Analog	SPARE THERMOCOUPLE INPUT			
PCU-4\PCU4-SP-TI-7_A	Digital	PCU-4 INPUT THERMOCOUPLE OVER OR UNDER RANGE ALARM			
PCU-4\PCU4-SP-TI-8	Analog	SPARE THERMOCOUPLE INPUT			
PCU-4\PCU4-SP-TI-8_A	Digital	PCU-4 INPUT THERMOCOUPLE OVER OR UNDER RANGE ALARM			
PCU-4\RAH-851	Digital	STACK 296-A-25 HIGH RADIATION	Alarm Subsystem	Alarmed Tag	
PCU-4\RAH-851_ACK	Digital	STACK 296-A-25 HIGH RADIATION ACKNOWLEDGE	Alarm Acknowledge Bit Tag	PCU-4\RAH-851	
PCU-4\TAH_CAB_PLC4	Digital	PLC-4 CABINET HIGH TEMPERATURE [OFF = ALARM]	Display	00Entry	TEST ENTRY
			Macro	Alm_Suppress	
			Alarm Subsystem	Alarmed Tag	
PCU-4\TAH_CAB_PLC4_ACK	Digital	PLC-4 CABINET HIGH TEMPERATURE ACKNOWLEDGE	Alarm Acknowledge Bit Tag	PCU-4\TAH_CAB_PLC4	
PCU-4\XA-058E	Digital	200-E MASTER SHUTDOWN CIRCUIT ACTIVATED Y-77.1	Display	01overvw	HANFORD CROSS SITE TRANSFER SYSTEM - SYSTEM OVERVIEW DIAGRAM
			Display	10liftsn	HANFORD CROSS SITE TRANSFER SYSTEM - PCU-4 - 244A LIFT STATION
			Alarm Subsystem	Alarmed Tag	
PCU-4\XA-058E_ACK	Digital	200-E MASTER SHUTDOWN CIRCUIT ACTIVATED Y-77.1 ACKNOWLEDGE	Alarm Acknowledge Bit Tag	PCU-4\XA-058E	
PCU-4\YL-058E	Digital	OVERRIDE OF 200-E MASTER SHUTDOWN Y-77.1	Display	10liftsn	HANFORD CROSS SITE TRANSFER SYSTEM - PCU-4 - 244A LIFT STATION
PCU-4\YL-841	Digital	ON/OFF STATUS FOR PUMP P-841 (OCS)	Display	10liftsn	HANFORD CROSS SITE TRANSFER SYSTEM - PCU-4 - 244A LIFT STATION
PCU-5\0_OFF	Digital	ALWAYS OFF PLACE HOLDER FOR PCU-5 VARIABLES			
PCU-5\BATT_BAD_PLC5	Digital	PLC-5 BATTERY IS BAD OR MISSING	Tag Monitor	HeartBeat	
			Display	00Entry	TEST ENTRY
			Display	01overvw	HANFORD CROSS SITE TRANSFER SYSTEM - SYSTEM OVERVIEW DIAGRAM
			Alarm Subsystem	Alarmed Tag	
PCU-5\BATT_BAD_PLC5_ACK	Digital	PLC-5 BATTERY IS BAD OR MISSING ACKNOWLEDGE	Alarm Acknowledge Bit Tag	PCU-5\BATT_BAD_PLC5	
PCU-5\COM-5_OCS	Digital	COMMUN. WITH OCS IGNORED	Tag Monitor	HeartBeat	
			Display	01overvw	HANFORD CROSS SITE TRANSFER SYSTEM - SYSTEM OVERVIEW DIAGRAM
			Macro	Alm_Suppress	
			Alarm Subsystem	Alarmed Tag	
PCU-5\COM-5_OCS_ACK	Digital	COMMUN. WITH OCS IGNORED ACKNOWLEDGE	Alarm Acknowledge Bit Tag	PCU-5\COM-5_OCS	
PCU-5\COM-51	Digital	COMMUN. WITH PCU-1 IGNORED	Display	00Entry	TEST ENTRY
			Display	01overvw	HANFORD CROSS SITE TRANSFER SYSTEM - SYSTEM OVERVIEW DIAGRAM
			Alarm Subsystem	Alarmed Tag	
PCU-5\COM-51_ACK	Digital	COMMUN. WITH PCU-1 IGNORED ACKNOWLEDGE	Alarm Acknowledge Bit Tag	PCU-5\COM-51	
PCU-5\COM-52	Digital	COMMUN. WITH PCU-2 IGNORED	Display	01overvw	HANFORD CROSS SITE TRANSFER SYSTEM - SYSTEM OVERVIEW DIAGRAM
			Alarm Subsystem	Alarmed Tag	
PCU-5\COM-52_ACK	Digital	COMMUN. WITH PCU-2 IGNORED ACKNOWLEDGE	Alarm Acknowledge Bit Tag	PCU-5\COM-52	
PCU-5\COM-53	Digital	COMMUN. WITH PCU-3 IGNORED	Display	01overvw	HANFORD CROSS SITE TRANSFER SYSTEM - SYSTEM OVERVIEW DIAGRAM
			Alarm Subsystem	Alarmed Tag	

Tag Name	Tag Type	Tag Description	Component Type	Component Name	Component Description
PCU-5\COM-53_ACK	Digital	COMMUN. WITH PCU-3 IGNORED ACKNOWLEDGE	Alarm Acknowledge Bit Tag	PCU-5\COM-53	
PCU-5\COM-54	Digital	COMMUN. WITH PCU-4 IGNORED	Display	01overvw	HANFORD CROSS SITE TRANSFER SYSTEM - SYSTEM OVERVIEW DIAGRAM
			Alarm Subsystem	Alarmed Tag	
PCU-5\COM-54_ACK	Digital	COMMUN. WITH PCU-4 IGNORED ACKNOWLEDGE	Alarm Acknowledge Bit Tag	PCU-5\COM-54	
PCU-5\COM-OCS_5	Digital	COMMUN. WITH PCU-5 IGNORED - DETECTED AT OCS	Display	01overvw	HANFORD CROSS SITE TRANSFER SYSTEM - SYSTEM OVERVIEW DIAGRAM
			Events	Mt_hb	Communications Heart Beat Event file
			Events	System	Event file
			Alarm Subsystem	Alarmed Tag	
PCU-5\COM-OCS_5_ACK	Digital	COMMUN. WITH PCU-5 IGNORED - DETECTED AT OCS ACKNOWLEDGE	Alarm Acknowledge Bit Tag	PCU-5\COM-OCS_5	
PCU-5\COM_OCS_5_MNT	Digital	Communiations failure with the PLC detected in this OIT	Derived Tags	Mt_hb	Derived Tag file
			Alarm Subsystem	Alarmed Tag	
PCU-5\COM_OCS_5_OPR	Digital	Communiations failure with the PLC detected in this OIT	Derived Tags	Op_hb	Derived Tag file
			Alarm Subsystem	Alarmed Tag	
PCU-5\HB_COMM_CNT	Analog	Communications checking counter	Tag Monitor	HeartBeat	
			Derived Tags	Comm_Check	Derived Tag file
PCU-5\HB_COMM_OK	Digital	Communications from PLC currently OK	Tag Monitor	HeartBeat	
			Derived Tags	Comm_Check	Derived Tag file
			Derived Tags	Mt_hb	Derived Tag file
			Derived Tags	Op_hb	Derived Tag file
PCU-5\HB_COMM_TIME	Analog	ACCUMULATED TIME FOR THE COMMUNICATION CHECK HEART-BEAT	Events	Mt_hb	Communications Heart Beat Event file
PCU-5\HB_OCS_PLC5	Digital	HEARTBEAT FROM OCS TO PLC-5	Tag Monitor	HeartBeat	
			Events	Mt_hb	Communications Heart Beat Event file
			Events	System	Event file
PCU-5\HB_OCS_PLC5_MNT	Analog	COMMUN. HEARTBEAT REGISTER FROM MAINTENANCE OIT TO PCU-5	Derived Tags	Mt_hb	Derived Tag file
PCU-5\HB_OCS_PLC5_OPR	Analog	COMMUN. HEARTBEAT REGISTER FROM OPERATIONS OIT TO PCU-5	Derived Tags	Op_hb	Derived Tag file
PCU-5\HB_PLC5_OCS	Digital	HEARTBEAT FROM PLC-5 TO OCS	Tag Monitor	HeartBeat	
			Events	Mt_hb	Communications Heart Beat Event file
			Events	System	Event file
PCU-5\HB_PLC5_OCS_BOTH	Analog	COMMUN. HEARTBEAT REGISTER FROM PCU-5 TO BOTH OPERATOR TERMINALS	Tag Monitor	HeartBeat	
			Derived Tags	Comm_Check	Derived Tag file
			Derived Tags	Comm_Reset	Derived Tag file
PCU-5\HB_REF	Analog	Communications heartbeat reference register	Tag Monitor	HeartBeat	
			Derived Tags	Comm_Check	Derived Tag file
			Derived Tags	Comm_Reset	Derived Tag file
PCU-5\LDA-3162	Digital	244-A ENCASEMENT LEAK DETECTION [OFF = ALARM] Y72	Display	01overvw	HANFORD CROSS SITE TRANSFER SYSTEM - SYSTEM OVERVIEW DIAGRAM
			Display	10liftsn	HANFORD CROSS SITE TRANSFER SYSTEM - PCU-4 - 244A LIFT STATION
			Alarm Subsystem	Alarmed Tag	
PCU-5\LDA-3162_ACK	Digital	244-A ENCASEMENT LEAK DETECTION [OFF = ALARM] Y72 ACKNOWLEDGE	Alarm Acknowledge Bit Tag	PCU-5\LDA-3162	
PCU-5\PCU5-SP-I0-01	Digital	SPARE DIGITAL INPUT			
PCU-5\PCU5-SP-I0-02	Digital	SPARE DIGITAL INPUT			
PCU-5\PCU5-SP-I0-03	Digital	SPARE DIGITAL INPUT			
PCU-5\PCU5-SP-I0-04	Digital	SPARE DIGITAL INPUT			
PCU-5\PCU5-SP-I0-05	Digital	SPARE DIGITAL INPUT			
PCU-5\PCU5-SP-I0-06	Digital	SPARE DIGITAL INPUT			
PCU-5\PCU5-SP-I0-07	Digital	SPARE DIGITAL INPUT			
PCU-5\PCU5-SP-I0-10	Digital	SPARE DIGITAL INPUT			
PCU-5\PCU5-SP-I0-11	Digital	SPARE DIGITAL INPUT			
PCU-5\PCU5-SP-I0-12	Digital	SPARE DIGITAL INPUT			
PCU-5\PCU5-SP-I0-13	Digital	SPARE DIGITAL INPUT			
PCU-5\PCU5-SP-I0-14	Digital	SPARE DIGITAL INPUT			
PCU-5\PCU5-SP-I0-15	Digital	SPARE DIGITAL INPUT			
PCU-5\PCU5-SP-I0-16	Digital	SPARE DIGITAL INPUT			
PCU-5\PCU5-SP-I0-17	Digital	SPARE DIGITAL INPUT			
PCU-5\TAH_CAB_PLC5	Digital	PLC-5 CABINET HIGH TEMPERATURE [OFF = ALARM]	Display	00Entry	TEST ENTRY
			Alarm Subsystem	Alarmed Tag	

Tag Name	Tag Type	Tag Description	Component Type	Component Name	Component Description
PCU-5\TAH_CAB_PLC5_ACK	Digital	PLC-5 CABINET HIGH TEMPERATURE ACKNOWLEDGE	Alarm Acknowledge Bit Tag	PCU-5\TAH_CAB_PLC5	
R_TRANSF_DLG_EN	Digital	ENABLE THE TRANSFER DATA LOGGING THE FIRST TIME IT IS USED	Events	System	Event file
			Macro	StartMac	
SCREEN_NUMBER	Analog	CURRENT SCREEN NUMBER (1 TO 12)	Display	00mode	HANFORD CROSS SITE TRANSFER SYSTEM - WELCOME AND TRANSFER MODE SELECTION SCREEN
			Display	01overvw	HANFORD CROSS SITE TRANSFER SYSTEM - SYSTEM OVERVIEW DIAGRAM
			Display	02help	HANFORD CROSS SITE TRANSFER SYSTEM - HELP PAGE
			Display	03almsmc	HANFORD CROSS SITE TRANSFER SYSTEM - ALARM SUMMARY DISPLAY
			Display	03almsmv	HANFORD CROSS SITE TRANSFER SYSTEM - ALARM SUMMARY DISPLAY
			Display	04divbox	HANFORD CROSS SITE TRANSFER SYSTEM - PCU-2 - DIVERSION BOX 6241-A
			Display	05p3125a	HANFORD CROSS SITE TRANSFER SYSTEM - PCU-2 - BOOSTER PUMP P-3125A
			Display	06p3125b	HANFORD CROSS SITE TRANSFER SYSTEM - PCU-2 - BOOSTER PUMP P-3125B
			Display	07draina	HANFORD CROSS SITE TRANSFER SYSTEM - PCU-2 - BOOSTER PUMP P-3125A - DRAIN VALVES
			Display	08drainb	HANFORD CROSS SITE TRANSFER SYSTEM - PCU-2 - BOOSTER PUMP P-3125B - DRAIN VALVES
			Display	09ventsn	HANFORD CROSS SITE TRANSFER SYSTEM - PCU-3 - VENT STATION 6241-V
			Display	10liftsn	HANFORD CROSS SITE TRANSFER SYSTEM - PCU-4 - 244A LIFT STATION
			Display	11sy101	HANFORD CROSS SITE TRANSFER SYSTEM - PCU-1 - TRANSFER PUMP FROM SY-101
			Display	12sy102	HANFORD CROSS SITE TRANSFER SYSTEM - PCU-1 - TRANSFER PUMP FROM SY-102
			Display	13flush	HANFORD CROSS SITE TRANSFER SYSTEM - PCU-1 - FLUSH SYSTEM
SECURITY	Analog	PRESENT SECURITY LEVEL	User Accounts		
			Display	00Entry	TEST ENTRY
			Display	00mode	HANFORD CROSS SITE TRANSFER SYSTEM - WELCOME AND TRANSFER MODE SELECTION SCREEN
			Display	01overvw	HANFORD CROSS SITE TRANSFER SYSTEM - SYSTEM OVERVIEW DIAGRAM
			Display	02help	HANFORD CROSS SITE TRANSFER SYSTEM - HELP PAGE
			Display	03almsmc	HANFORD CROSS SITE TRANSFER SYSTEM - ALARM SUMMARY DISPLAY
			Display	03almsmv	HANFORD CROSS SITE TRANSFER SYSTEM - ALARM SUMMARY DISPLAY
			Display	04divbox	HANFORD CROSS SITE TRANSFER SYSTEM - PCU-2 - DIVERSION BOX 6241-A
			Display	05p3125a	HANFORD CROSS SITE TRANSFER SYSTEM - PCU-2 - BOOSTER PUMP P-3125A
			Display	06p3125b	HANFORD CROSS SITE TRANSFER SYSTEM - PCU-2 - BOOSTER PUMP P-3125B
			Display	09ventsn	HANFORD CROSS SITE TRANSFER SYSTEM - PCU-3 - VENT STATION 6241-V
			Display	10liftsn	HANFORD CROSS SITE TRANSFER SYSTEM - PCU-4 - 244A LIFT STATION

Tag Name	Tag Type	Tag Description	Component Type	Component Name	Component Description
			Display	11sy101	HANFORD CROSS SITE TRANSFER SYSTEM - PCU-1 - TRANSFER PUMP FROM SY-101
			Display	12sy102	HANFORD CROSS SITE TRANSFER SYSTEM - PCU-1 - TRANSFER PUMP FROM SY-102
			Display	13flush	HANFORD CROSS SITE TRANSFER SYSTEM - PCU-1 - FLUSH SYSTEM
			Display	Caustic	Caustic Ratio Entry Pop-Up
			Display	Mov-2p-d	Two Position Motor Operated Drain Valve Pop-Up
			Display	Mov-2pos	Two Position Motor Operated Valve Pop-Up
			Display	Mov-3pos	Three Position Motor Operated Valve Pop-Up
			Display	Pmp3100a	Flush Pump Popup
			Display	Pmp350pid	Transfer Pump Popup
			Display	Sov-2pos	Two Position Solenoid Valve Pop-Up
			Display	Test	HANFORD CROSS SITE TRANSFER SYSTEM - TEST AND DEMONSTRATION DISPLAY
			Events	System	Event file
			Macro	StartMac	
STATION_CHECK	Digital	INITIATE CHECKING OIT STAION ID ON POWER-UP	Events	System	Event file
			Macro	Engr_strt	
			Macro	Mt_strt	
			Macro	Op_strt	
			Macro	StartMac	
SyncTAD\PCU-1\Day	Analog	SyncTAD day tag. Do not modify.			
SyncTAD\PCU-1\Hour	Analog	SyncTAD hour tag. Do not modify.			
SyncTAD\PCU-1\Minute	Analog	SyncTAD minute tag. Do not modify.			
SyncTAD\PCU-1\Month	Analog	SyncTAD month tag. Do not modify.			
SyncTAD\PCU-1\Second	Analog	SyncTAD second tag. Do not modify.			
SyncTAD\PCU-1\Year	Analog	SyncTAD year tag. Do not modify.			
SyncTAD\PCU-2\Day	Analog	SyncTAD day tag. Do not modify.			
SyncTAD\PCU-2\Hour	Analog	SyncTAD hour tag. Do not modify.			
SyncTAD\PCU-2\Minute	Analog	SyncTAD minute tag. Do not modify.			
SyncTAD\PCU-2\Month	Analog	SyncTAD month tag. Do not modify.			
SyncTAD\PCU-2\Second	Analog	SyncTAD second tag. Do not modify.			
SyncTAD\PCU-2\Year	Analog	SyncTAD year tag. Do not modify.			
SyncTAD\PCU-3\Day	Analog	SyncTAD day tag. Do not modify.			
SyncTAD\PCU-3\Hour	Analog	SyncTAD hour tag. Do not modify.			
SyncTAD\PCU-3\Minute	Analog	SyncTAD minute tag. Do not modify.			
SyncTAD\PCU-3\Month	Analog	SyncTAD month tag. Do not modify.			
SyncTAD\PCU-3\Second	Analog	SyncTAD second tag. Do not modify.			
SyncTAD\PCU-3\Year	Analog	SyncTAD year tag. Do not modify.			
SyncTAD\PCU-4\Day	Analog	SyncTAD day tag. Do not modify.			
SyncTAD\PCU-4\Hour	Analog	SyncTAD hour tag. Do not modify.			
SyncTAD\PCU-4\Minute	Analog	SyncTAD minute tag. Do not modify.			
SyncTAD\PCU-4\Month	Analog	SyncTAD month tag. Do not modify.			
SyncTAD\PCU-4\Second	Analog	SyncTAD second tag. Do not modify.			
SyncTAD\PCU-4\Year	Analog	SyncTAD year tag. Do not modify.			
SyncTAD\PCU-5\Day	Analog	SyncTAD day tag. Do not modify.			
SyncTAD\PCU-5\Hour	Analog	SyncTAD hour tag. Do not modify.			
SyncTAD\PCU-5\Minute	Analog	SyncTAD minute tag. Do not modify.			
SyncTAD\PCU-5\Month	Analog	SyncTAD month tag. Do not modify.			
SyncTAD\PCU-5\Second	Analog	SyncTAD second tag. Do not modify.			
SyncTAD\PCU-5\Year	Analog	SyncTAD year tag. Do not modify.			
system\AlarmBanner	String	Alarm banner: Information on most recent alarm	Library	Alarm Information	
system\AlarmMostRecentDate	String	Date of most recent most severe alarm			
system\AlarmMostRecentLabel	String	Label of most recent most severe alarm			
system\AlarmMostRecentSeverity	Analog	Severity of most recent most severe alarm			
system\AlarmMostRecentTagDesc	String	Description of tag for most recent most severe alarm			
system\AlarmMostRecentTagname	String	Name of tag for most recent most severe alarm			
system\AlarmMostRecentTime	String	Time of most recent most severe alarm			
system\AlarmMostRecentUnits	String	Units of tag for most recent most severe alarm			
system\AlarmStatus	String	Alarm status: number of suppressed and unacknowledged Alarms	Library	Alarm Information	
system\AlarmSummaryItems	Analog	Number of Alarms	Library	Alarm Information	
system\AlarmSummaryItemsUnacked	Analog	Number of unacknowledged Alarms	Library	Alarm Information	
system\AlarmSuppressedCount	Analog	Number of suppressed Alarmable tags			
system\BlinkFast	Digital	Changes every 100 ms	Library	Computer - Workstations	Computer
			Library	Motors - ResKit	
			Library	Pipes 3	
			Library	Pumps	Mouse Graphics Display

Tag Name	Tag Type	Tag Description	Component Type	Component Name	Component Description
system\BlinkSlow	Digital	Changes every 500 ms	Display	02help	HANFORD CROSS SITE TRANSFER SYSTEM - HELP PAGE
			Display	10liftsn	HANFORD CROSS SITE TRANSFER SYSTEM - PCU-4 - 244A LIFT STATION
			Display	11sy101	HANFORD CROSS SITE TRANSFER SYSTEM - PCU-1 - TRANSFER PUMP FROM SY-101
			Display	12sy102	HANFORD CROSS SITE TRANSFER SYSTEM - PCU-1 - TRANSFER PUMP FROM SY-102
			Display	Pmp350pid	Transfer Pump Popup
			Events	Mt_hb	Communications Heart Beat Event file
system\ComErrorStringDDE	String				
system\ComErrorStringOPC	String				
system\ComErrorValueDDE	Analog				
system\ComErrorValueOPC	Analog				
system\ComStatusStringDDE	String				
system\ComStatusStringOPC	String				
system\ComStatusValueDDE	Analog				
system\ComStatusValueOPC	Analog				
system\Date	String	System date string			
system\DateAndTimeInteger	Analog	System date and time integer			
system\DateAndTimeString	String	System date and time string	Display	00mode	HANFORD CROSS SITE TRANSFER SYSTEM - WELCOME AND TRANSFER MODE SELECTION SCREEN
			Display	01overvw	HANFORD CROSS SITE TRANSFER SYSTEM - SYSTEM OVERVIEW DIAGRAM
			Display	02help	HANFORD CROSS SITE TRANSFER SYSTEM - HELP PAGE
			Display	03almsmc	HANFORD CROSS SITE TRANSFER SYSTEM - ALARM SUMMARY DISPLAY
			Display	03almsmv	HANFORD CROSS SITE TRANSFER SYSTEM - ALARM SUMMARY DISPLAY
			Display	04divbox	HANFORD CROSS SITE TRANSFER SYSTEM - PCU-2 - DIVERSION BOX 6241-A
			Display	05p3125a	HANFORD CROSS SITE TRANSFER SYSTEM - PCU-2 - BOOSTER PUMP P-3125A
			Display	06p3125b	HANFORD CROSS SITE TRANSFER SYSTEM - PCU-2 - BOOSTER PUMP P-3125B
			Display	07draina	HANFORD CROSS SITE TRANSFER SYSTEM - PCU-2 - BOOSTER PUMP P-3125A - DRAIN VALVES
			Display	08drainb	HANFORD CROSS SITE TRANSFER SYSTEM - PCU-2 - BOOSTER PUMP P-3125B - DRAIN VALVES
			Display	09ventsn	HANFORD CROSS SITE TRANSFER SYSTEM - PCU-3 - VENT STATION 6241-V
			Display	10liftsn	HANFORD CROSS SITE TRANSFER SYSTEM - PCU-4 - 244A LIFT STATION
			Display	11sy101	HANFORD CROSS SITE TRANSFER SYSTEM - PCU-1 - TRANSFER PUMP FROM SY-101
			Display	12sy102	HANFORD CROSS SITE TRANSFER SYSTEM - PCU-1 - TRANSFER PUMP FROM SY-102
			Display	13flush	HANFORD CROSS SITE TRANSFER SYSTEM - PCU-1 - FLUSH SYSTEM
			Display	Test	HANFORD CROSS SITE TRANSFER SYSTEM - TEST AND DEMONSTRATION DISPLAY
system\DayOfMonth	Analog	Day of Month	Display	00mode	HANFORD CROSS SITE TRANSFER SYSTEM - WELCOME AND TRANSFER MODE SELECTION SCREEN
			Library	Clocks	
system\DayOfWeek	Analog	Day of Week (Sunday = 1)			
system\DayOfYear	Analog	Day of Year			
system\Hour	Analog	Hour of day (0 - 23)	Library	Clocks	
			Library	Trends	
			Events	System	Event file
system\MemoryB1Meg	Analog	Available memory below 1 Meg, in KB			
system\MemoryGDI	Analog	Percentage of free GDI resources			
system\MemoryUser	Analog	Percentage of free User resources			
system\MemoryVirtual	Analog	Available virtual memory in KB			

Tag Name	Tag Type	Tag Description	Component Type	Component Name	Component Description
system\Minute	Analog	Minutes (0 - 59)	Library	Clocks	
			Library	Trends	
			Events	System	Event file
system\Month	Analog	Month	Display	00mode	HANFORD CROSS SITE TRANSFER SYSTEM - WELCOME AND TRANSFER MODE SELECTION SCREEN
			Library	Clocks	
system\MonthString	String	Month as string			
system\Second	Analog	Seconds (0 - 59)	Library	Car Assembly - ResKit	
			Library	Clocks	
			Library	Gauges	
			Library	Injection Mold - ResKit	
			Library	Machines	
			Library	Robots - ResKit	
			Library	Shapes and borders	
			Library	Tanks	
			Library	Trends	
system\Time	String	System time string	Display	00mode	HANFORD CROSS SITE TRANSFER SYSTEM - WELCOME AND TRANSFER MODE SELECTION SCREEN
			Library	Clocks	
system\User	String	Currently logged on User			
system\Year	Analog	Year	Display	00mode	HANFORD CROSS SITE TRANSFER SYSTEM - WELCOME AND TRANSFER MODE SELECTION SCREEN
			Library	Clocks	
TEST_1	Digital	TEST HOLDING BIT	Display	Test	HANFORD CROSS SITE TRANSFER SYSTEM - TEST AND DEMONSTRATION DISPLAY
			Data Log Setup	Spd_Test	
TEST_2	Digital	TEST HOLDING BIT			
TEST_3	Digital	TEST HOLDING BIT			
TEST_4	Digital	TEST HOLDING BIT	Alarm Subsystem	Alarmed Tag	
TEST_5	Digital	TEST HOLDING BIT	Alarm Subsystem	Alarmed Tag	
TEST_6	Digital	TEST HOLDING BIT	Alarm Subsystem	Alarmed Tag	
TEST_7	Digital	TEST HOLDING BIT	Alarm Subsystem	Alarmed Tag	
Tnd_test\CurrentFile	Analog	Current datalog file displayed by trend.			
Tnd_test\CurrentPen	Analog	Current trend pen selected.			
Tnd_test\NewestFile	Analog	Offset to the newest data log file.			
Tnd_test\NewestTime	Analog	Time of newest data available to trend			
Tnd_test\OldestFile	Analog	Offset to the oldest data log file.			
Tnd_test\OldestTime	Analog	Time of oldest data available to trend.			
Tnd_test\Paused	Digital	Pause trend display at current time			
Tnd_test\PenMask	Analog	Enable/disable display of trend pens			
Tnd_test\StartTime	Analog	Current start time of the trend.			
Tnd_test\TimeRange	Analog	Time range in seconds of trend display			
Tnd_test\YMag	Analog	Magnification of trend Y axis.			
Tnd_test\YOffset	Analog	Offset of trend Y axis.			
Trnd_tf\CurrentFile	Analog	Current datalog file displayed by trend.	Display	Test	HANFORD CROSS SITE TRANSFER SYSTEM - TEST AND DEMONSTRATION DISPLAY
Trnd_tf\CurrentPen	Analog	Current trend pen selected.			
Trnd_tf\NewestFile	Analog	Offset to the newest data log file.	Display	Test	HANFORD CROSS SITE TRANSFER SYSTEM - TEST AND DEMONSTRATION DISPLAY
Trnd_tf\NewestTime	Analog	Time of newest data available to trend	Display	Test	HANFORD CROSS SITE TRANSFER SYSTEM - TEST AND DEMONSTRATION DISPLAY
Trnd_tf\OldestFile	Analog	Offset to the oldest data log file.	Display	Test	HANFORD CROSS SITE TRANSFER SYSTEM - TEST AND DEMONSTRATION DISPLAY
Trnd_tf\OldestTime	Analog	Time of oldest data available to trend.	Display	Test	HANFORD CROSS SITE TRANSFER SYSTEM - TEST AND DEMONSTRATION DISPLAY
Trnd_tf\Paused	Digital	Pause trend display at current time	Display	Test	HANFORD CROSS SITE TRANSFER SYSTEM - TEST AND DEMONSTRATION DISPLAY
Trnd_tf\PenMask	Analog	Enable/disable display of trend pens			
Trnd_tf\StartTime	Analog	Current start time of the trend.	Display	Test	HANFORD CROSS SITE TRANSFER SYSTEM - TEST AND DEMONSTRATION DISPLAY
Trnd_tf\StartTimeDate	String	Start Date			
Trnd_tf\TimeRange	Analog	Time range in seconds of trend display	Display	Test	HANFORD CROSS SITE TRANSFER SYSTEM - TEST AND DEMONSTRATION DISPLAY
Trnd_tf\Updating	Digital	Is datamodel in the process of updating			
Trnd_tf\YMag	Analog	Magnification of trend Y axis.	Display	Test	HANFORD CROSS SITE TRANSFER SYSTEM - TEST AND DEMONSTRATION DISPLAY

Tag Name	Tag Type	Tag Description	Component Type	Component Name	Component Description
Trnd_tf\YOffset	Analog	Offset of trend Y axis.	Display	Test	HANFORD CROSS SITE TRANSFER SYSTEM - TEST AND DEMONSTRATION DISPLAY
Trnd_tr\CurrentFile	Analog	Current datalog file displayed by trend.			
Trnd_tr\CurrentPen	Analog	Current trend pen selected.			
Trnd_tr\NewestFile	Analog	Offset to the newest data log file.			
Trnd_tr\NewestTime	Analog	Time of newest data available to trend	Display	Test	HANFORD CROSS SITE TRANSFER SYSTEM - TEST AND DEMONSTRATION DISPLAY
Trnd_tr\OldestFile	Analog	Offset to the oldest data log file.			
Trnd_tr\OldestTime	Analog	Time of oldest data available to trend.	Display	Test	HANFORD CROSS SITE TRANSFER SYSTEM - TEST AND DEMONSTRATION DISPLAY
Trnd_tr\Paused	Digital	Pause trend display at current time	Display	Test	HANFORD CROSS SITE TRANSFER SYSTEM - TEST AND DEMONSTRATION DISPLAY
Trnd_tr\PenMask	Analog	Enable/disable display of trend pens			
Trnd_tr\StartTime	Analog	Current start time of the trend.	Display	Test	HANFORD CROSS SITE TRANSFER SYSTEM - TEST AND DEMONSTRATION DISPLAY
Trnd_tr\StartTimeDate	String	Start Date			
Trnd_tr\TimeRange	Analog	Time range in seconds of trend display	Display	Test	HANFORD CROSS SITE TRANSFER SYSTEM - TEST AND DEMONSTRATION DISPLAY
Trnd_tr\Updating	Digital	Is datamodel in the process of updating			
Trnd_tr\YMag	Analog	Magnification of trend Y axis.	Display	Test	HANFORD CROSS SITE TRANSFER SYSTEM - TEST AND DEMONSTRATION DISPLAY
Trnd_tr\YOffset	Analog	Offset of trend Y axis.	Display	Test	HANFORD CROSS SITE TRANSFER SYSTEM - TEST AND DEMONSTRATION DISPLAY
VALVE_NAME	String	VALVE NAME FOR DISPLAY IN THE VALVE POP-UPS	Display	04divbox	HANFORD CROSS SITE TRANSFER SYSTEM - PCU-2 - DIVERSION BOX 6241-A
			Display	07draina	HANFORD CROSS SITE TRANSFER SYSTEM - PCU-2 - BOOSTER PUMP P-3125A - DRAIN VALVES
			Display	08drainb	HANFORD CROSS SITE TRANSFER SYSTEM - PCU-2 - BOOSTER PUMP P-3125B - DRAIN VALVES
			Display	09ventsn	HANFORD CROSS SITE TRANSFER SYSTEM - PCU-3 - VENT STATION 6241-V
			Display	Mov-2p-d	Two Position Motor Operated Drain Valve Pop-Up
			Display	Mov-2pos	Two Position Motor Operated Valve Pop-Up
			Display	Mov-3pos	Three Position Motor Operated Valve Pop-Up
			Display	Sov-2pos	Two Position Solenoid Valve Pop-Up
			Macro	Dsp_load	

1.4.2 System\Tag Database\Tag List

Total Number of Tags = 1229 : 224 Analog Tags, 984 Digital Tags, 21 String Tags

Tag Name	Tag Type	Description						
COMPUTER_NAME	String	COMPUTER NAME READ FROM THE RSVIEW OBJECT MODEL	Alarmed: No	Security: *	Memory Tag	Initial Value: NULL		
			Length : 30					
MAINTENANCE_STATION	Digital	OIT STATION SELECTION - TRUE=MAINTENANCE, FALSE=OPERATOR	Alarmed: No	Security: *	Memory Tag	Initial Value: On		
			Off Label: Off	On Label: On				
PB_INDICATOR	Analog	VALUE INDICATING THE PUSHBUTTON BEING ACKNOWLEDGED	Alarmed: No	Security: *	Memory Tag	Initial Value: 0		
			Minimum : 0	Maximum : 10	Scale : 1	Offset : 0	Units:	Data Type: Integer
PCU-1\0_OFF	Digital	ALWAYS OFF PLACE HOLDER FOR PCU-1 VARIABLES	Alarmed: No	Security: *	Memory Tag	Initial Value: Off		
			Off Label: Off	On Label: On				

Tag Name	Tag Type	Description						
PCU-1\200W-SD2	Digital	INPUT SIGNAL TO 200-W MASTER SHUTDOWN Y-72.1	Alarmed: No	Security: *	Device Tag	Node Name: PCU-1	Address: N14:29/4	Scan Class: A
			Off Label: Off	On Label: On				
PCU-1\BATT_BAD_PLC1	Digital	PLC-1 BATTERY IS BAD OR MISSING	Alarmed: Yes	Security: *	Device Tag	Node Name: PCU-1	Address: N14:0/6	Scan Class: A
			Off Label: Off	On Label: On				
PCU-1\BATT_BAD_PLC1_ACK	Digital	PLC-1 BATTERY IS BAD OR MISSING ACKNOWLEDGE	Alarmed: No	Security: *	Device Tag	Node Name: PCU-1	Address: N14:210/1	Scan Class: A
			Off Label: Off	On Label: On				
PCU-1\COM-12	Digital	COMMUN. WITH PCU-2 IGNORED	Alarmed: Yes	Security: *	Device Tag	Node Name: PCU-1	Address: N14:0/2	Scan Class: A
			Off Label: Off	On Label: On				
PCU-1\COM-12_ACK	Digital	COMMUN. WITH PCU-2 IGNORED ACKNOWLEDGE	Alarmed: No	Security: *	Device Tag	Node Name: PCU-1	Address: N14:210/2	Scan Class: A
			Off Label: Off	On Label: On				
PCU-1\COM-13	Digital	COMMUN. WITH PCU-3 IGNORED	Alarmed: Yes	Security: *	Device Tag	Node Name: PCU-1	Address: N14:0/3	Scan Class: A
			Off Label: Off	On Label: On				
PCU-1\COM-13_ACK	Digital	COMMUN. WITH PCU-3 IGNORED ACKNOWLEDGE	Alarmed: No	Security: *	Device Tag	Node Name: PCU-1	Address: N14:210/3	Scan Class: A
			Off Label: Off	On Label: On				
PCU-1\COM-14	Digital	COMMUN. WITH PCU-4 IGNORED	Alarmed: Yes	Security: *	Device Tag	Node Name: PCU-1	Address: N14:0/4	Scan Class: A
			Off Label: Off	On Label: On				
PCU-1\COM-14_ACK	Digital	COMMUN. WITH PCU-4 IGNORED ACKNOWLEDGE	Alarmed: No	Security: *	Device Tag	Node Name: PCU-1	Address: N14:210/4	Scan Class: A
			Off Label: Off	On Label: On				
PCU-1\COM-15	Digital	COMMUN. WITH PCU-5 IGNORED	Alarmed: Yes	Security: *	Device Tag	Node Name: PCU-1	Address: N14:0/5	Scan Class: A
			Off Label: Off	On Label: On				
PCU-1\COM-15_ACK	Digital	COMMUN. WITH PCU-5 IGNORED ACKNOWLEDGE	Alarmed: No	Security: *	Device Tag	Node Name: PCU-1	Address: N14:210/5	Scan Class: A
			Off Label: Off	On Label: On				
PCU-1\COM-1_OCS	Digital	COMMUN. WITH OCS IGNORED	Alarmed: Yes	Security: *	Device Tag	Node Name: PCU-1	Address: N14:0/1	Scan Class: A
			Off Label: Off	On Label: On				
PCU-1\COM-1_OCS_ACK	Digital	COMMUN. WITH OCS IGNORED ACKNOWLEDGE	Alarmed: No	Security: *	Device Tag	Node Name: PCU-1	Address: N14:210/6	Scan Class: A
			Off Label: Off	On Label: On				
PCU-1\COM-OCS_1	Digital	COMMUN. WITH PCU-1 IGNORED - DETECTED AT OCS	Alarmed: Yes	Security: *	Memory Tag	Initial Value: Off		
			Off Label: Off	On Label: On				
PCU-1\COM-OCS_1_ACK	Digital	COMMUN. WITH PCU-1 IGNORED - DETECTED AT OCS ACKNOWLEDGE	Alarmed: No	Security: *	Device Tag	Node Name: PCU-1	Address: N14:210/7	Scan Class: A
			Off Label: Off	On Label: On				
PCU-1\COM_OCS_1_MNT	Digital	Communiations failure with the PLC detected in this OIT	Alarmed: Yes	Security: *	Memory Tag	Initial Value: Off		
			Off Label: Off	On Label: On				
PCU-1\COM_OCS_1_OPR	Digital	Communiations failure with the PLC detected in this OIT	Alarmed: Yes	Security: *	Memory Tag	Initial Value: Off		
			Off Label: Off	On Label: On				
PCU-1\COM_SPD_TST	Analog	COMMUNICATIONS TEST REGISTER TO OIT	Alarmed: No	Security: *	Device Tag	Node Name: PCU-1	Address: N14:10	Scan Class: C
			Minimum : 0	Maximum : 32768	Scale : 1	Offset : 0	Units: 0.1 SECONDS	Data Type: Integer
PCU-1\FAL-P3100A	Digital	FLUSH PUMP P-3100A LOW FLOW Y-90.1	Alarmed: Yes	Security: *	Device Tag	Node Name: PCU-1	Address: N14:0/12	Scan Class: A
			Off Label: Off	On Label: On				
PCU-1\FAL-P3100A_ACK	Digital	FLUSH PUMP P-3100A LOW FLOW Y-90.1 ACKNOWLEDGE	Alarmed: No	Security: *	Device Tag	Node Name: PCU-1	Address: N14:210/8	Scan Class: A
			Off Label: Off	On Label: On				

Tag Name	Tag Type	Description						
PCU-1\FI-302C-1	Analog	FLUSH PUMP P-3100A OUTLET FLOW	Alarmed: No	Security: *	Device Tag	Node Name: PCU-1	Address: N14:30	Scan Class: A
			Minimum : 0	Maximum : 142	Scale : 1	Offset : 0	Units: GPM	Data Type: Integer
PCU-1\FI-302C-1_A	Digital	PCU-1 INPUT ANALOG OVER OR UNDER RANGE ALARM	Alarmed: Yes	Security: *	Device Tag	Node Name: PCU-1	Address: N14:11/0	Scan Class: A
			Off Label: Off	On Label: On				
PCU-1\FI-302C-1_A_ACK	Digital	PCU-1 INPUT ANALOG OVER OR UNDER RANGE ALARM ACKNOWLEDGE	Alarmed: No	Security: *	Device Tag	Node Name: PCU-1	Address: N14:210/9	Scan Class: A
			Off Label: Off	On Label: On				
PCU-1\FI-367A	Analog	SY-101-WT-P-350 TRANSFER PUMP DISCHARGE FLOW	Alarmed: No	Security: *	Device Tag	Node Name: PCU-1	Address: N14:36	Scan Class: A
			Minimum : 0	Maximum : 310	Scale : 1	Offset : 0	Units:	Data Type: Integer
PCU-1\FI-367A_A	Digital	PCU-1 INPUT ANALOG OVER OR UNDER RANGE ALARM	Alarmed: Yes	Security: *	Device Tag	Node Name: PCU-1	Address: N14:11/6	Scan Class: A
			Off Label: Off	On Label: On				
PCU-1\FI-367A_A_ACK	Digital	PCU-1 INPUT ANALOG OVER OR UNDER RANGE ALARM ACKNOWLEDGE	Alarmed: No	Security: *	Device Tag	Node Name: PCU-1	Address: N14:211/10	Scan Class: A
			Off Label: Off	On Label: On				
PCU-1\FIC-302C-2	Analog	INLET FLOW TO TANK TK-302-C LINE 4	Alarmed: No	Security: *	Device Tag	Node Name: PCU-1	Address: N14:31	Scan Class: A
			Minimum : 0	Maximum : 350	Scale : 1	Offset : 0	Units: GPM	Data Type: Integer
PCU-1\FIC-302C-2_A	Digital	PCU-1 INPUT ANALOG OVER OR UNDER RANGE ALARM	Alarmed: Yes	Security: *	Device Tag	Node Name: PCU-1	Address: N14:11/1	Scan Class: A
			Off Label: Off	On Label: On				
PCU-1\FIC-302C-2_A_ACK	Digital	PCU-1 INPUT ANALOG OVER OR UNDER RANGE ALARM ACKNOWLEDGE	Alarmed: No	Security: *	Device Tag	Node Name: PCU-1	Address: N14:210/10	Scan Class: A
			Off Label: Off	On Label: On				
PCU-1\FIC-302C-2A	Analog	FLOW CONTROL CHEM ADD PUMP P-3100B	Alarmed: No	Security: *	Device Tag	Node Name: PCU-1	Address: N14:46	Scan Class: A
			Minimum : 0	Maximum : 32768	Scale : 1	Offset : 0	Units:	Data Type: Integer
PCU-1\FIC-3101-E	Analog	PUMP SY-101-WT-P-350 OUTLET FLOW DRIVE SPEED LOOP ERROR	Alarmed: No	Security: *	Device Tag	Node Name: PCU-1	Address: N14:60	Scan Class: A
			Minimum : 0	Maximum : 32767	Scale : 1	Offset : 0	Units:	Data Type: Integer
PCU-1\FIC-3101-O	Analog	PUMP SY-101-WT-P-350 OUTLET FLOW/ DRIVE SPEED REF OUTPUT	Alarmed: No	Security: *	Device Tag	Node Name: PCU-1	Address: N14:61	Scan Class: A
			Minimum : 0	Maximum : 6000	Scale : 1	Offset : 0	Units:	Data Type: Integer
PCU-1\FIQ-302C-2H	Analog	TOTALIZED INLET FLOW TO TANK TK-302-C HIGH PART	Alarmed: No	Security: *	Device Tag	Node Name: PCU-1	Address: N14:59	Scan Class: A
			Minimum : 0	Maximum : 60	Scale : 1	Offset : 0	Units:	Data Type: Integer
PCU-1\FIQ-302C-2L	Analog	TOTALIZED INLET FLOW TO TANK TK-302-C LOW PART	Alarmed: No	Security: *	Device Tag	Node Name: PCU-1	Address: N14:58	Scan Class: A
			Minimum : 0	Maximum : 60	Scale : 1	Offset : 0	Units:	Data Type: Integer
PCU-1\FR-302C-2	Analog	CHEMICAL ADD PUMP P-3100B TO TANK TK-302-C % OF INLET FLOW REF FROM OIT	Alarmed: No	Security: *	Device Tag	Node Name: PCU-1	Address: N14:140	Scan Class: A
			Minimum : 0	Maximum : 2000	Scale : 1	Offset : 0	Units: % (TIMES 10)	Data Type: Integer
PCU-1\HB_COMM_CNT	Analog	Communications checking counter	Alarmed: No	Security: *	Memory Tag	Initial Value: 0		
			Minimum : 0	Maximum : 100	Scale : 1	Offset : 0	Units:	Data Type: (Default)

Tag Name	Tag Type	Description						
PCU-1\HB_COMM_OK	Digital	Communications from PLC currently OK	Alarmed: No	Security: *	Memory Tag	Initial Value: Off		
			Off Label: Off	On Label: On				
PCU-1\HB_COMM_TIME	Analog	ACCUMULATED TIME FOR THE COMMUNICATION CHECK HEART-BEAT	Alarmed: No	Security: *	Memory Tag	Initial Value: 0		
			Minimum : 0	Maximum : 100	Scale : 1	Offset : 0	Units:	Data Type: Integer
PCU-1\HB_OCS_PLC1	Digital	HEARTBEAT FROM OCS TO PLC-1	Alarmed: No	Security: *	Device Tag	Node Name: PCU-1	Address: N14:120/0	Scan Class: A
			Off Label: Off	On Label: On				
PCU-1\HB_OCS_PLC1_MNT	Analog	COMMUN. HEARTBEAT REGISTER FROM MAINTENANCE OIT TO PCU-1	Alarmed: No	Security: *	Device Tag	Node Name: PCU-1	Address: N14:135	Scan Class: A
			Minimum : 0	Maximum : 32767	Scale : 1	Offset : 0	Units: N/A	Data Type: Integer
PCU-1\HB_OCS_PLC1_OPR	Analog	COMMUN. HEARTBEAT REGISTER FROM OPERATIONS OIT TO PCU-1	Alarmed: No	Security: *	Device Tag	Node Name: PCU-1	Address: N14:134	Scan Class: A
			Minimum : 0	Maximum : 32767	Scale : 1	Offset : 0	Units: N/A	Data Type: Integer
PCU-1\HB_PLC1_OCS	Digital	HEARTBEAT FROM PLC-1 TO OCS	Alarmed: No	Security: *	Device Tag	Node Name: PCU-1	Address: N14:0/0	Scan Class: A
			Off Label: Off	On Label: On				
PCU-1\HB_PLC1_OCS_BOTH	Analog	COMMUN. HEARTBEAT REGISTER FROM PCU-1 TO BOTH OPERATOR TERMINALS	Alarmed: No	Security: *	Device Tag	Node Name: PCU-1	Address: N14:15	Scan Class: A
			Minimum : 0	Maximum : 32767	Scale : 1	Offset : 0	Units: N/A	Data Type: Integer
PCU-1\HB_REF	Analog	Communications heartbeat reference register	Alarmed: No	Security: *	Memory Tag	Initial Value: 0		
			Minimum : 0	Maximum : 32767	Scale : 1	Offset : 0	Units:	Data Type: (Default)
PCU-1\HS-058W	Digital	OVERRIDE OF 200-W MASTER SHUTDOWN Y-77.1	Alarmed: No	Security: *	Device Tag	Node Name: PCU-1	Address: N14:120/9	Scan Class: A
			Off Label: Off	On Label: On				
PCU-1\HS-302C-2R	Digital	ACCUMULATED INLET FLOW TO TANK TK-302-C RESET	Alarmed: No	Security: *	Device Tag	Node Name: PCU-1	Address: N14:120/12	Scan Class: A
			Off Label: Off	On Label: On				
PCU-1\HS-3100A1	Digital	START FLUSH PUMP P-3100A Y-90.1	Alarmed: No	Security: *	Device Tag	Node Name: PCU-1	Address: N14:120/10	Scan Class: A
			Off Label: Off	On Label: On				
PCU-1\HS-3100A2	Digital	STOP FLUSH PUMP P-3100A Y-90.1	Alarmed: No	Security: *	Device Tag	Node Name: PCU-1	Address: N14:120/11	Scan Class: A
			Off Label: Off	On Label: On				
PCU-1\HS-3101-M	Digital	PID FOR PUMP SY-101-WT-P-350 MANUAL MODE	Alarmed: No	Security: *	Device Tag	Node Name: PCU-1	Address: N14:120/3	Scan Class: A
			Off Label: Off	On Label: On				
PCU-1\HS-3101A	Digital	START TRANSFER PUMP SY-101-WT-P-350	Alarmed: No	Security: *	Device Tag	Node Name: PCU-1	Address: N14:120/4	Scan Class: A
			Off Label: Off	On Label: On				
PCU-1\HS-3101B	Digital	STOP TRANSFER PUMP SY-101-WT-P-350	Alarmed: No	Security: *	Device Tag	Node Name: PCU-1	Address: N14:120/5	Scan Class: A
			Off Label: Off	On Label: On				
PCU-1\HS-3101C	Digital	TRANSFER PUMP SY-101-WT-P-350 RECIRCULATION	Alarmed: No	Security: *	Device Tag	Node Name: PCU-1	Address: N14:120/1	Scan Class: A
			Off Label: Off	On Label: On				
PCU-1\HS-3101D	Digital	ENABLE SY-101-WT-P-350 PUMP	Alarmed: No	Security: *	Device Tag	Node Name: PCU-1	Address: N14:120/2	Scan Class: A
			Off Label: Off	On Label: On				

Tag Name	Tag Type	Description						
PCU-1\HS-3102A	Digital	START TRANSFER PUMP P-102-SY-02A Y75	Alarmed: No	Security: *	Device Tag	Node Name: PCU-1	Address: N14:120/6	Scan Class: A
			Off Label: Off	On Label: On				
PCU-1\HS-3102B	Digital	STOP TRANSFER PUMP P-102-SY-02A Y75	Alarmed: No	Security: *	Device Tag	Node Name: PCU-1	Address: N14:120/7	Scan Class: A
			Off Label: Off	On Label: On				
PCU-1\HS-3102C	Digital	TRANSFER PUMP P-102-SY-02A RECIRCULATION Y-75.1	Alarmed: No	Security: *	Device Tag	Node Name: PCU-1	Address: N14:120/8	Scan Class: A
			Off Label: Off	On Label: On				
PCU-1\IAH-350	Digital	SY-101-WT-P-350 TRANSFER PUMP HIGH CURRENT ALARM	Alarmed: Yes	Security: *	Device Tag	Node Name: PCU-1	Address: N14:1/2	Scan Class: A
			Off Label: Off	On Label: On				
PCU-1\IAH-350_ACK	Digital	SY-101-WT-P-350 TRANSFER PUMP HIGH CURRENT ALARM ACKNOWLEDGE	Alarmed: No	Security: *	Device Tag	Node Name: PCU-1	Address: N14:211/9	Scan Class: A
			Off Label: Off	On Label: On				
PCU-1\II-3102	Analog	PUMP P-102-SY-02A CURRENT	Alarmed: No	Security: *	Device Tag	Node Name: PCU-1	Address: N14:33	Scan Class: A
			Minimum : 0	Maximum : 50	Scale : 1	Offset : 0	Units: AMP	Data Type: Integer
PCU-1\II-3102_A	Digital	PCU-1 INPUT ANALOG OVER OR UNDER RANGE ALARM	Alarmed: Yes	Security: *	Device Tag	Node Name: PCU-1	Address: N14:11/3	Scan Class: A
			Off Label: Off	On Label: On				
PCU-1\II-3102_A_ACK	Digital	PCU-1 INPUT ANALOG OVER OR UNDER RANGE ALARM ACKNOWLEDGE	Alarmed: No	Security: *	Device Tag	Node Name: PCU-1	Address: N14:210/11	Scan Class: A
			Off Label: Off	On Label: On				
PCU-1\II-350	Analog	SY-101-WT-P-350 TRANSFER PUMP CURRENT	Alarmed: No	Security: *	Device Tag	Node Name: PCU-1	Address: N14:50	Scan Class: A
			Minimum : 0	Maximum : 32768	Scale : 1	Offset : 0	Units:	Data Type: Integer
PCU-1\II-350_A	Digital	PCU-1 INPUT ANALOG OVER OR UNDER RANGE ALARM	Alarmed: Yes	Security: *	Device Tag	Node Name: PCU-1	Address: N14:13/0	Scan Class: A
			Off Label: Off	On Label: On				
PCU-1\II-350_A_ACK	Digital	PCU-1 INPUT ANALOG OVER OR UNDER RANGE ALARM ACKNOWLEDGE	Alarmed: No	Security: *	Device Tag	Node Name: PCU-1	Address: N14:211/12	Scan Class: A
			Off Label: Off	On Label: On				
PCU-1\K-LA-365	Digital	TRANSFER PUMP SY-101 PUMP PACKAGE LEAK ALARM	Alarmed: Yes	Security: *	Device Tag	Node Name: PCU-1	Address: N14:26/7	Scan Class: A
			Off Label: Off	On Label: On				
PCU-1\K-LA-365_ACK	Digital	TRANSFER PUPMP SY-101-WT-P-350 PUMP LEAK ALARM ACKNOWLEDGE	Alarmed: No	Security: *	Device Tag	Node Name: PCU-1	Address: N14:211/5	Scan Class: A
			Off Label: Off	On Label: On				
PCU-1\LAL-302C1	Digital	TANK TK-302C-1 LEVEL BIT Y-90.1	Alarmed: Yes	Security: *	Device Tag	Node Name: PCU-1	Address: N14:0/11	Scan Class: A
			Off Label: Off	On Label: On				
PCU-1\LAL-302C1_ACK	Digital	TANK TK-302C-1 LEVEL BIT Y-90.1 ACKNOWLEDGE	Alarmed: No	Security: *	Device Tag	Node Name: PCU-1	Address: N14:210/12	Scan Class: A
			Off Label: Off	On Label: On				
PCU-1\LAL-3101	Digital	TANK 241-SY-101 LOW LEVEL	Alarmed: Yes	Security: *	Device Tag	Node Name: PCU-1	Address: N14:0/15	Scan Class: A
			Off Label: Off	On Label: On				
PCU-1\LAL-3101_ACK	Digital	TANK 241-SY101 LOW LEVEL ACKNOWLEDGE	Alarmed: No	Security: *	Device Tag	Node Name: PCU-1	Address: N14:211/4	Scan Class: A
			Off Label: Off	On Label: On				

Tag Name	Tag Type	Description						
PCU-1\LAL-3102	Digital	TANK 241-SY-102 LOW LEVEL	Alarmed: Yes	Security: *	Device Tag	Node Name: PCU-1	Address: N14:0/14	Scan Class: A
			Off Label: Off	On Label: On				
PCU-1\LAL-3102_ACK	Digital	TANK 241-SY-102 LOW LEVEL ACKNOWLEDGE	Alarmed: No	Security: *	Device Tag	Node Name: PCU-1	Address: N14:210/13	Scan Class: A
			Off Label: Off	On Label: On				
PCU-1\LI-302C-1	Analog	TANK TK-302-C LEVEL	Alarmed: No	Security: *	Device Tag	Node Name: PCU-1	Address: N14:32	Scan Class: A
			Minimum : 0	Maximum : 20	Scale : 1	Offset : 0	Units: FT	Data Type: Integer
PCU-1\LI-302C-1_A	Digital	PCU-1 INPUT ANALOG OVER OR UNDER RANGE ALARM	Alarmed: Yes	Security: *	Device Tag	Node Name: PCU-1	Address: N14:11/2	Scan Class: A
			Off Label: Off	On Label: On				
PCU-1\LI-302C-1_A_ACK	Digital	PCU-1 INPUT ANALOG OVER OR UNDER RANGE ALARM ACKNOWLEDGE	Alarmed: No	Security: *	Device Tag	Node Name: PCU-1	Address: N14:210/14	Scan Class: A
			Off Label: Off	On Label: On				
PCU-1\LI-3101	Analog	241-SY-101 TANK LEVEL INDICATION	Alarmed: No	Security: *	Device Tag	Node Name: PCU-1	Address: N14:54	Scan Class: A
			Minimum : 0	Maximum : 32768	Scale : 1	Offset : 0	Units:	Data Type: Integer
PCU-1\LI-3101_A	Digital	PCU-1 INPUT ANALOG OVER OR UNDER RANGE ALARM	Alarmed: Yes	Security: *	Device Tag	Node Name: PCU-1	Address: N14:13/4	Scan Class: A
			Off Label: Off	On Label: On				
PCU-1\LI-3101_A_ACK	Digital	PCU-1 INPUT ANALOG OVER OR UNDER RANGE ALARM ACKNOWLEDGE	Alarmed: No	Security: *	Device Tag	Node Name: PCU-1	Address: N14:211/14	Scan Class: A
			Off Label: Off	On Label: On				
PCU-1\LI-3102	Analog	241-SY-102 TANK LEVEL INDICATION	Alarmed: No	Security: *	Device Tag	Node Name: PCU-1	Address: N14:34	Scan Class: A
			Minimum : 0	Maximum : 20	Scale : 1	Offset : 0	Units: FT	Data Type: Integer
PCU-1\LI-3102_A	Digital	PCU-1 INPUT ANALOG OVER OR UNDER RANGE ALARM	Alarmed: Yes	Security: *	Device Tag	Node Name: PCU-1	Address: N14:11/4	Scan Class: A
			Off Label: Off	On Label: On				
PCU-1\LI-3102_A_ACK	Digital	PCU-1 INPUT ANALOG OVER OR UNDER RANGE ALARM ACKNOWLEDGE	Alarmed: No	Security: *	Device Tag	Node Name: PCU-1	Address: N14:210/15	Scan Class: A
			Off Label: Off	On Label: On				
PCU-1\P-101-WT-RESET	Digital	RESET PUMP SY-101-WT-P-350 INTERLOCKS	Alarmed: No	Security: *	Device Tag	Node Name: PCU-1	Address: N14:29/6	Scan Class: A
			Off Label: Off	On Label: On				
PCU-1\P-101-WT-RUN	Digital	RUN PUMP SY-101-WT-P-350	Alarmed: No	Security: *	Device Tag	Node Name: PCU-1	Address: N14:29/7	Scan Class: A
			Off Label: Off	On Label: On				
PCU-1\P-101E	Digital	TRANSFER PUMP SY-101-WT-P-350 ENABLED	Alarmed: No	Security: *	Device Tag	Node Name: PCU-1	Address: N14:26/9	Scan Class: A
			Off Label: Off	On Label: On				
PCU-1\P-101R	Digital	TRANSFER PUMP SY-101-WT-P-350 RUNNING	Alarmed: No	Security: *	Device Tag	Node Name: PCU-1	Address: N14:26/8	Scan Class: A
			Off Label: Off	On Label: On				
PCU-1\P-102-SY-02A1	Digital	START PUMP P-102-SY-02A Y75	Alarmed: No	Security: *	Device Tag	Node Name: PCU-1	Address: N14:29/2	Scan Class: A
			Off Label: Off	On Label: On				
PCU-1\P-102-SY-02A2	Digital	STOP PUMP P-102-SY-02A Y75	Alarmed: No	Security: *	Device Tag	Node Name: PCU-1	Address: N14:29/4	Scan Class: A
			Off Label: Off	On Label: On				
PCU-1\P-102-SY-02A3	Digital	TRANSFER PUMP P-102-SY-02A RUNNING AUX	Alarmed: No	Security: *	Device Tag	Node Name: PCU-1	Address: N14:26/4	Scan Class: A
			Off Label: Off	On Label: On				

Tag Name	Tag Type	Description						
PCU-1\P-102-SY-02A4	Digital	TRANSFER PUMP P-102-SY-02A ENABLED - POWER ON	Alarmed: No	Security: *	Device Tag	Node Name: PCU-1	Address: N14:26/5	Scan Class: A
			Off Label: Off	On Label: On				
PCU-1\P-102-SY-02EN	Digital	START PERMISSIVE P-102-SY-02A [ON=ENAB]	Alarmed: No	Security: *	Device Tag	Node Name: PCU-1	Address: N14:29/3	Scan Class: A
			Off Label: Off	On Label: On				
PCU-1\P-3100A1	Digital	START PUMP P-3100A Y-90.1	Alarmed: No	Security: *	Device Tag	Node Name: PCU-1	Address: N14:29/1	Scan Class: A
			Off Label: Off	On Label: On				
PCU-1\P-3100A2	Digital	STOP PUMP P-3100A Y-90.1	Alarmed: No	Security: *	Device Tag	Node Name: PCU-1	Address: N14:29/0	Scan Class: A
			Off Label: Off	On Label: On				
PCU-1\P-3100A3	Digital	FLUSH PUMP RUN CONTACT	Alarmed: No	Security: *	Device Tag	Node Name: PCU-1	Address: N14:26/6	Scan Class: A
			Off Label: Off	On Label: On				
PCU-1\PAH-350	Digital	SY-101-WT-P-350 TRANSFER PUMP HIGH DISCHARGE PRESSURE ALARM	Alarmed: Yes	Security: *	Device Tag	Node Name: PCU-1	Address: N14:0/10	Scan Class: A
			Off Label: Off	On Label: On				
PCU-1\PAH-350_ACK	Digital	SY-101-WT-P-350 TRANSFER PUMP HIGH DISCHARGE PRESSURE ALARM ACKNOWLEDGE	Alarmed: No	Security: *	Device Tag	Node Name: PCU-1	Address: N14:211/8	Scan Class: A
			Off Label: Off	On Label: On				
PCU-1\PCU1-SP-AI-53	Analog	SPARE ANALOG INPUT	Alarmed: No	Security: *	Device Tag	Node Name: PCU-1	Address: N14:52	Scan Class: A
			Minimum : 0	Maximum : 32768	Scale : 1	Offset : 0	Units:	Data Type: Integer
PCU-1\PCU1-SP-AI-53_A	Digital	PCU-1 INPUT ANALOG OVER OR UNDER RANGE ALARM	Alarmed: No	Security: *	Device Tag	Node Name: PCU-1	Address: N14:13/2	Scan Class: A
			Off Label: Off	On Label: On				
PCU-1\PCU1-SP-AI-54	Analog	SPARE ANALOG INPUT	Alarmed: No	Security: *	Device Tag	Node Name: PCU-1	Address: N14:53	Scan Class: A
			Minimum : 0	Maximum : 32768	Scale : 1	Offset : 0	Units:	Data Type: Integer
PCU-1\PCU1-SP-AI-54_A	Digital	PCU-1 INPUT ANALOG OVER OR UNDER RANGE ALARM	Alarmed: No	Security: *	Device Tag	Node Name: PCU-1	Address: N14:13/3	Scan Class: A
			Off Label: Off	On Label: On				
PCU-1\PCU1-SP-AI-56	Analog	SPARE ANALOG INPUT	Alarmed: No	Security: *	Device Tag	Node Name: PCU-1	Address: N14:55	Scan Class: A
			Minimum : 0	Maximum : 32768	Scale : 1	Offset : 0	Units:	Data Type: Integer
PCU-1\PCU1-SP-AI-56_A	Digital	PCU-1 INPUT ANALOG OVER OR UNDER RANGE ALARM	Alarmed: No	Security: *	Device Tag	Node Name: PCU-1	Address: N14:13/5	Scan Class: A
			Off Label: Off	On Label: On				
PCU-1\PCU1-SP-AI-57	Analog	SPARE ANALOG INPUT	Alarmed: No	Security: *	Device Tag	Node Name: PCU-1	Address: N14:56	Scan Class: A
			Minimum : 0	Maximum : 32768	Scale : 1	Offset : 0	Units:	Data Type: Integer
PCU-1\PCU1-SP-AI-57_A	Digital	PCU-1 INPUT ANALOG OVER OR UNDER RANGE ALARM	Alarmed: No	Security: *	Device Tag	Node Name: PCU-1	Address: N14:13/6	Scan Class: A
			Off Label: Off	On Label: On				
PCU-1\PCU1-SP-AI-58	Analog	SPARE ANALOG INPUT	Alarmed: No	Security: *	Device Tag	Node Name: PCU-1	Address: N14:57	Scan Class: A
			Minimum : 0	Maximum : 32768	Scale : 1	Offset : 0	Units:	Data Type: Integer
PCU-1\PCU1-SP-AI-58_A	Digital	PCU-1 INPUT ANALOG OVER OR UNDER RANGE ALARM	Alarmed: No	Security: *	Device Tag	Node Name: PCU-1	Address: N14:13/7	Scan Class: A
			Off Label: Off	On Label: On				
PCU-1\PCU1-SP-AI-6	Analog	SPARE ANALOG INPUT	Alarmed: No	Security: *	Device Tag	Node Name: PCU-1	Address: N14:35	Scan Class: A
			Minimum : 0	Maximum : 32768	Scale : 1	Offset : 0	Units:	Data Type: Integer
PCU-1\PCU1-SP-AI-6_A	Digital	PCU-1 INPUT ANALOG OVER OR UNDER RANGE ALARM	Alarmed: No	Security: *	Device Tag	Node Name: PCU-1	Address: N14:11/5	Scan Class: A
			Off Label: Off	On Label: On				

Tag Name	Tag Type	Description						
PCU-1\PCU1-SP-AO-3	Analog	SPARE ANALOG OUTPUT	Alarmed: No	Security: *	Device Tag	Node Name: PCU-1	Address: N14:48	Scan Class: A
			Minimum : 0	Maximum : 32768	Scale : 1	Offset : 0	Units:	Data Type: Integer
PCU-1\PCU1-SP-AO-4	Analog	SPARE ANALOG OUTPUT	Alarmed: No	Security: *	Device Tag	Node Name: PCU-1	Address: N14:49	Scan Class: A
			Minimum : 0	Maximum : 32768	Scale : 1	Offset : 0	Units:	Data Type: Integer
PCU-1\PCU1-SP-I3-03	Digital	SPARE DIGITAL INPUT	Alarmed: No	Security: *	Device Tag	Node Name: PCU-1	Address: N14:26/3	Scan Class: A
			Off Label: Off	On Label: On				
PCU-1\PCU1-SP-I3-13	Digital	SPARE DIGITAL INPUT	Alarmed: No	Security: *	Device Tag	Node Name: PCU-1	Address: N14:26/11	Scan Class: A
			Off Label: Off	On Label: On				
PCU-1\PCU1-SP-I3-14	Digital	SPARE DIGITAL INPUT	Alarmed: No	Security: *	Device Tag	Node Name: PCU-1	Address: N14:26/12	Scan Class: A
			Off Label: Off	On Label: On				
PCU-1\PCU1-SP-I3-15	Digital	SPARE DIGITAL INPUT	Alarmed: No	Security: *	Device Tag	Node Name: PCU-1	Address: N14:26/13	Scan Class: A
			Off Label: Off	On Label: On				
PCU-1\PCU1-SP-I3-16	Digital	SPARE DIGITAL INPUT	Alarmed: No	Security: *	Device Tag	Node Name: PCU-1	Address: N14:26/14	Scan Class: A
			Off Label: Off	On Label: On				
PCU-1\PCU1-SP-I3-17	Digital	SPARE DIGITAL INPUT	Alarmed: No	Security: *	Device Tag	Node Name: PCU-1	Address: N14:26/15	Scan Class: A
			Off Label: Off	On Label: On				
PCU-1\PCU1-SP-O7-10	Digital	SPARE DIGITAL OUTPUT	Alarmed: No	Security: *	Device Tag	Node Name: PCU-1	Address: N14:29/8	Scan Class: A
			Off Label: Off	On Label: On				
PCU-1\PCU1-SP-O7-11	Digital	SPARE DIGITAL OUTPUT	Alarmed: No	Security: *	Device Tag	Node Name: PCU-1	Address: N14:29/9	Scan Class: A
			Off Label: Off	On Label: On				
PCU-1\PCU1-SP-O7-12	Digital	SPARE DIGITAL OUTPUT	Alarmed: No	Security: *	Device Tag	Node Name: PCU-1	Address: N14:29/10	Scan Class: A
			Off Label: Off	On Label: On				
PCU-1\PCU1-SP-O7-13	Digital	SPARE DIGITAL OUTPUT	Alarmed: No	Security: *	Device Tag	Node Name: PCU-1	Address: N14:29/11	Scan Class: A
			Off Label: Off	On Label: On				
PCU-1\PCU1-SP-O7-14	Digital	SPARE DIGITAL OUTPUT	Alarmed: No	Security: *	Device Tag	Node Name: PCU-1	Address: N14:29/12	Scan Class: A
			Off Label: Off	On Label: On				
PCU-1\PCU1-SP-O7-15	Digital	SPARE DIGITAL OUTPUT	Alarmed: No	Security: *	Device Tag	Node Name: PCU-1	Address: N14:29/13	Scan Class: A
			Off Label: Off	On Label: On				
PCU-1\PCU1-SP-O7-16	Digital	SPARE DIGITAL OUTPUT	Alarmed: No	Security: *	Device Tag	Node Name: PCU-1	Address: N14:29/14	Scan Class: A
			Off Label: Off	On Label: On				
PCU-1\PCU1-SP-O7-17	Digital	SPARE DIGITAL OUTPUT	Alarmed: No	Security: *	Device Tag	Node Name: PCU-1	Address: N14:29/15	Scan Class: A
			Off Label: Off	On Label: On				
PCU-1\PCU1-SP-TI-3	Analog	SPARE THERMOCOUPLE INPUT	Alarmed: No	Security: *	Device Tag	Node Name: PCU-1	Address: N14:40	Scan Class: A
			Minimum : 0	Maximum : 32768	Scale : 1	Offset : 0	Units:	Data Type: Integer
PCU-1\PCU1-SP-TI-3_A	Digital	PCU-1 INPUT THERMOCOUPLE OVER OR UNDER RANGE ALARM	Alarmed: No	Security: *	Device Tag	Node Name: PCU-1	Address: N14:12/10	Scan Class: A
			Off Label: Off	On Label: On				
PCU-1\PCU1-SP-TI-4	Analog	SPARE THERMOCOUPLE INPUT	Alarmed: No	Security: *	Device Tag	Node Name: PCU-1	Address: N14:41	Scan Class: A
			Minimum : 0	Maximum : 32768	Scale : 1	Offset : 0	Units:	Data Type: Integer
PCU-1\PCU1-SP-TI-4_A	Digital	PCU-1 INPUT THERMOCOUPLE OVER OR UNDER RANGE ALARM	Alarmed: No	Security: *	Device Tag	Node Name: PCU-1	Address: N14:12/11	Scan Class: A
			Off Label: Off	On Label: On				
PCU-1\PCU1-SP-TI-5	Analog	SPARE THERMOCOUPLE INPUT	Alarmed: No	Security: *	Device Tag	Node Name: PCU-1	Address: N14:42	Scan Class: A
			Minimum : 0	Maximum : 32768	Scale : 1	Offset : 0	Units:	Data Type: Integer
PCU-1\PCU1-SP-TI-5_A	Digital	PCU-1 INPUT THERMOCOUPLE OVER OR UNDER RANGE ALARM	Alarmed: No	Security: *	Device Tag	Node Name: PCU-1	Address: N14:12/12	Scan Class: A
			Off Label: Off	On Label: On				

Tag Name	Tag Type	Description						
PCU-1\PCU1-SP-TI-6	Analog	SPARE THERMOCOUPLE INPUT	Alarmed: No	Security: *	Device Tag	Node Name: PCU-1	Address: N14:43	Scan Class: A
			Minimum : 0	Maximum : 32768	Scale : 1	Offset : 0	Units:	Data Type: Integer
PCU-1\PCU1-SP-TI-6_A	Digital	PCU-1 INPUT THERMOCOUPLE OVER OR UNDER RANGE ALARM	Alarmed: No	Security: *	Device Tag	Node Name: PCU-1	Address: N14:12/13	Scan Class: A
			Off Label: Off	On Label: On				
PCU-1\PCU1-SP-TI-7	Analog	SPARE THERMOCOUPLE INPUT	Alarmed: No	Security: *	Device Tag	Node Name: PCU-1	Address: N14:44	Scan Class: A
			Minimum : 0	Maximum : 32768	Scale : 1	Offset : 0	Units:	Data Type: Integer
PCU-1\PCU1-SP-TI-7_A	Digital	PCU-1 INPUT THERMOCOUPLE OVER OR UNDER RANGE ALARM	Alarmed: No	Security: *	Device Tag	Node Name: PCU-1	Address: N14:12/14	Scan Class: A
			Off Label: Off	On Label: On				
PCU-1\PCU1-SP-TI-8	Analog	SPARE THERMOCOUPLE INPUT	Alarmed: No	Security: *	Device Tag	Node Name: PCU-1	Address: N14:45	Scan Class: A
			Minimum : 0	Maximum : 32768	Scale : 1	Offset : 0	Units:	Data Type: Integer
PCU-1\PCU1-SP-TI-8_A	Digital	PCU-1 INPUT THERMOCOUPLE OVER OR UNDER RANGE ALARM	Alarmed: No	Security: *	Device Tag	Node Name: PCU-1	Address: N14:12/15	Scan Class: A
			Off Label: Off	On Label: On				
PCU-1\PI-368	Analog	SY-101-WT-P-350 TRANSFER PUMP DISCHARGE PRESSURE	Alarmed: No	Security: *	Device Tag	Node Name: PCU-1	Address: N14:37	Scan Class: A
			Minimum : 0	Maximum : 32768	Scale : 1	Offset : 0	Units:	Data Type: Integer
PCU-1\PI-368_A	Digital	PCU-1 INPUT ANALOG OVER OR UNDER RANGE ALARM	Alarmed: Yes	Security: *	Device Tag	Node Name: PCU-1	Address: N14:11/7	Scan Class: A
			Off Label: Off	On Label: On				
PCU-1\PI-368_A_ACK	Digital	PCU-1 INPUT ANALOG OVER OR UNDER RANGE ALARM ACKNOWLEDGE	Alarmed: No	Security: *	Device Tag	Node Name: PCU-1	Address: N14:211/11	Scan Class: A
			Off Label: Off	On Label: On				
PCU-1\PID-3101-FR	Analog	TRANSFER PUMP SY-101-WT-P-350 FLOW SETPOINT REF FROM OIT	Alarmed: No	Security: *	Device Tag	Node Name: PCU-1	Address: N14:141	Scan Class: A
			Minimum : 0	Maximum : 310	Scale : 1	Offset : 0	Units:	Data Type: Integer
PCU-1\PID-3101-KD	Analog	TRANSFER PUMP SY-101-WT-P-350 PID DERIVITIVE GAIN REF FROM OIT	Alarmed: No	Security: *	Device Tag	Node Name: PCU-1	Address: N14:144	Scan Class: A
			Minimum : 0	Maximum : 300	Scale : 1	Offset : 0	Units:	Data Type: Integer
PCU-1\PID-3101-KI	Analog	TRANSFER PUMP SY-101-WT-P-350 PID INTEGRAL GAIN REF FROM OIT	Alarmed: No	Security: *	Device Tag	Node Name: PCU-1	Address: N14:143	Scan Class: A
			Minimum : 0	Maximum : 100	Scale : 1	Offset : 0	Units:	Data Type: Integer
PCU-1\PID-3101-KP	Analog	TRANSFER PUMP SY-101-WT-P-350 PID PROPORTIONAL GAIN REF FROM OIT	Alarmed: No	Security: *	Device Tag	Node Name: PCU-1	Address: N14:142	Scan Class: A
			Minimum : 0	Maximum : 1000	Scale : 1	Offset : 0	Units:	Data Type: Integer
PCU-1\PID-3101-MR	Analog	TRANSFER PUMP SY-101-WT-P-350 MANUAL REF FROM OIT	Alarmed: No	Security: *	Device Tag	Node Name: PCU-1	Address: N14:145	Scan Class: A
			Minimum : 0	Maximum : 600	Scale : 1	Offset : 0	Units:	Data Type: Integer
PCU-1\PID-3101-OUT	Analog	SY-101-WT-P-350 TRANSFER PUMP SPEED CONTROL	Alarmed: No	Security: *	Device Tag	Node Name: PCU-1	Address: N14:47	Scan Class: A
			Minimum : 0	Maximum : 6000	Scale : 1	Offset : 0	Units:	Data Type: Integer
PCU-1\SI-350	Analog	SY-101-WT-P-350 TRANSFER PUMP SPEED	Alarmed: No	Security: *	Device Tag	Node Name: PCU-1	Address: N14:51	Scan Class: A
			Minimum : 0	Maximum : 600	Scale : 1	Offset : 0	Units:	Data Type: Integer

Tag Name	Tag Type	Description						
PCU-1\SI-350_A	Digital	PCU-1 INPUT ANALOG OVER OR UNDER RANGE ALARM	Alarmed: Yes	Security: *	Device Tag	Node Name: PCU-1	Address: N14:13/1	Scan Class: A
			Off Label: Off	On Label: On				
PCU-1\SI-350_A_ACK	Digital	PCU-1 INPUT ANALOG OVER OR UNDER RANGE ALARM ACKNOWLEDGE	Alarmed: No	Security: *	Device Tag	Node Name: PCU-1	Address: N14:211/13	Scan Class: A
			Off Label: Off	On Label: On				
PCU-1\TAH-302C-1A	Digital	CIRCULATION HEATER #1 HTR-302C-1 OUTLET TEMP [OFF = ALARM]	Alarmed: Yes	Security: *	Device Tag	Node Name: PCU-1	Address: N14:26/0	Scan Class: A
			Off Label: Off	On Label: On				
PCU-1\TAH-302C-1A_ACK	Digital	CIRCULATION HEATER #1 HTR-302C-1 OUTLET TEMP ACKNOWLEDGE	Alarmed: No	Security: *	Device Tag	Node Name: PCU-1	Address: N14:211/0	Scan Class: A
			Off Label: Off	On Label: On				
PCU-1\TAH-302C-1B	Digital	CIRCULATION HEATER #2 HTR-302C-2 OUTLET TEMP [OFF = ALARM]	Alarmed: Yes	Security: *	Device Tag	Node Name: PCU-1	Address: N14:26/1	Scan Class: A
			Off Label: Off	On Label: On				
PCU-1\TAH-302C-1B_ACK	Digital	CIRCULATION HEATER #2 HTR-302C-2 OUTLET TEMP ACKNOWLEDGE	Alarmed: No	Security: *	Device Tag	Node Name: PCU-1	Address: N14:211/1	Scan Class: A
			Off Label: Off	On Label: On				
PCU-1\TAH_CAB_PLC1	Digital	PLC-1 CABINET HIGH TEMPERATURE [OFF = ALARM]	Alarmed: Yes	Security: *	Device Tag	Node Name: PCU-1	Address: N14:26/10	Scan Class: A
			Off Label: Off	On Label: On				
PCU-1\TAH_CAB_PLC1_ACK	Digital	PLC-1 CABINET HIGH TEMPERATURE ACKNOWLEDGE	Alarmed: No	Security: *	Device Tag	Node Name: PCU-1	Address: N14:211/6	Scan Class: A
			Off Label: Off	On Label: On				
PCU-1\TI-302C-1	Analog	TANK TK-302-C TEMPERATURE	Alarmed: No	Security: *	Device Tag	Node Name: PCU-1	Address: N14:38	Scan Class: A
			Minimum : 0	Maximum : 180	Scale : 1	Offset : 0	Units: DEG F	Data Type: Integer
PCU-1\TI-302C-1_A	Digital	PCU-1 INPUT THERMOCOUPLE OVER OR UNDER RANGE ALARM	Alarmed: Yes	Security: *	Device Tag	Node Name: PCU-1	Address: N14:12/8	Scan Class: A
			Off Label: Off	On Label: On				
PCU-1\TI-302C-1_A_ACK	Digital	PCU-1 INPUT THERMOCOUPLE OVER OR UNDER RANGE ALARM ACKNOWLEDGE	Alarmed: No	Security: *	Device Tag	Node Name: PCU-1	Address: N14:211/2	Scan Class: A
			Off Label: Off	On Label: On				
PCU-1\TI-302C-2	Analog	FLUSH PUMP P-3100A OUTLET TEMP LINE 3 INCH	Alarmed: No	Security: *	Device Tag	Node Name: PCU-1	Address: N14:39	Scan Class: A
			Minimum : 0	Maximum : 180	Scale : 1	Offset : 0	Units: DEG F	Data Type: Integer
PCU-1\TI-302C-2_A	Digital	PCU-1 INPUT THERMOCOUPLE OVER OR UNDER RANGE ALARM	Alarmed: Yes	Security: *	Device Tag	Node Name: PCU-1	Address: N14:12/9	Scan Class: A
			Off Label: Off	On Label: On				
PCU-1\TI-302C-2_A_ACK	Digital	PCU-1 INPUT THERMOCOUPLE OVER OR UNDER RANGE ALARM ACKNOWLEDGE	Alarmed: No	Security: *	Device Tag	Node Name: PCU-1	Address: N14:211/3	Scan Class: A
			Off Label: Off	On Label: On				
PCU-1\XA-058W	Digital	200-W MASTER SHUTDOWN CIRCUIT ACTIVATED Y-77.1	Alarmed: Yes	Security: *	Device Tag	Node Name: PCU-1	Address: N14:26/2	Scan Class: A
			Off Label: Off	On Label: On				

Tag Name	Tag Type	Description						
PCU-1\XA-058W_ACK	Digital	200-W MASTER SHUTDOWN CIRCUIT ACTIVATED Y-77.1 ACKNOWLEDGE	Alarmed: No	Security: *	Device Tag	Node Name: PCU-1	Address: N14:210/0	Scan Class: A
			Off Label: Off	On Label: On				
PCU-1\XA-350	Digital	SY-101-WT-P-350 TRANSFER PUMP FAILURE	Alarmed: Yes	Security: *	Device Tag	Node Name: PCU-1	Address: N14:0/7	Scan Class: A
			Off Label: Off	On Label: On				
PCU-1\XA-350_ACK	Digital	SY-101-WT-P-350 TRANSFER PUMP FAILURE ALARM ACKNOWLEDGE	Alarmed: No	Security: *	Device Tag	Node Name: PCU-1	Address: N14:211/7	Scan Class: A
			Off Label: Off	On Label: On				
PCU-1\YL-058W	Digital	OVERRIDE OF 200-W MASTER SHUTDOWN Y-77.1	Alarmed: No	Security: *	Device Tag	Node Name: PCU-1	Address: N14:0/13	Scan Class: A
			Off Label: Off	On Label: On				
PCU-1\ZL-3101C	Digital	TRANSFER PUMP SY-101-WT-P-350 RECIRCULATION MODE	Alarmed: No	Security: *	Device Tag	Node Name: PCU-1	Address: N14:1/0	Scan Class: A
			Off Label: Off	On Label: On				
PCU-1\ZL-3101D	Digital	TRANSFER PUMP SY-101-WT-P-350 TRANSFER MODE	Alarmed: No	Security: *	Device Tag	Node Name: PCU-1	Address: N14:1/1	Scan Class: A
			Off Label: Off	On Label: On				
PCU-1\ZL-3102C	Digital	TRANSFER PUMP P-102-SY-02A RECIRCULATION MODE Y-75.1	Alarmed: No	Security: *	Device Tag	Node Name: PCU-1	Address: N14:0/8	Scan Class: A
			Off Label: Off	On Label: On				
PCU-1\ZL-3102D	Digital	TRANSFER PUMP P-102-SY-02A TRANSFER MODE Y-75.1	Alarmed: No	Security: *	Device Tag	Node Name: PCU-1	Address: N14:0/9	Scan Class: A
			Off Label: Off	On Label: On				
PCU-2\0_OFF	Digital	ALWAYS OFF PLACE HOLDER FOR PCU-2 VARIABLES	Alarmed: No	Security: *	Memory Tag	Initial Value: Off		
			Off Label: Off	On Label: On				
PCU-2\BATT_BAD_PLC2	Digital	PLC-2 BATTERY IS BAD OR MISSING	Alarmed: Yes	Security: *	Device Tag	Node Name: PCU-2	Address: N14:0/6	Scan Class: A
			Off Label: Off	On Label: On				
PCU-2\BATT_BAD_PLC2_ACK	Digital	PLC-2 BATTERY IS BAD OR MISSING ACKNOWLEDGE	Alarmed: No	Security: *	Device Tag	Node Name: PCU-2	Address: N14:210/0	Scan Class: A
			Off Label: Off	On Label: On				
PCU-2\COM-21	Digital	COMMUN. WITH PCU-1 IGNORED	Alarmed: Yes	Security: *	Device Tag	Node Name: PCU-2	Address: N14:0/1	Scan Class: A
			Off Label: Off	On Label: On				
PCU-2\COM-21_ACK	Digital	COMMUN. WITH PCU-1 IGNORED ACKNOWLEDGE	Alarmed: No	Security: *	Device Tag	Node Name: PCU-2	Address: N14:210/1	Scan Class: A
			Off Label: Off	On Label: On				
PCU-2\COM-23	Digital	COMMUN. WITH PCU-3 IGNORED	Alarmed: Yes	Security: *	Device Tag	Node Name: PCU-2	Address: N14:0/3	Scan Class: A
			Off Label: Off	On Label: On				
PCU-2\COM-23_ACK	Digital	COMMUN. WITH PCU-3 IGNORED ACKNOWLEDGE	Alarmed: No	Security: *	Device Tag	Node Name: PCU-2	Address: N14:210/2	Scan Class: A
			Off Label: Off	On Label: On				
PCU-2\COM-24	Digital	COMMUN. WITH PCU-4 IGNORED	Alarmed: Yes	Security: *	Device Tag	Node Name: PCU-2	Address: N14:0/4	Scan Class: A
			Off Label: Off	On Label: On				
PCU-2\COM-24_ACK	Digital	COMMUN. WITH PCU-4 IGNORED ACKNOWLEDGE	Alarmed: No	Security: *	Device Tag	Node Name: PCU-2	Address: N14:210/3	Scan Class: A
			Off Label: Off	On Label: On				
PCU-2\COM-25	Digital	COMMUN. WITH PCU-5 IGNORED	Alarmed: Yes	Security: *	Device Tag	Node Name: PCU-2	Address: N14:0/5	Scan Class: A
			Off Label: Off	On Label: On				
PCU-2\COM-25_ACK	Digital	COMMUN. WITH PCU-5 IGNORED ACKNOWLEDGE	Alarmed: No	Security: *	Device Tag	Node Name: PCU-2	Address: N14:210/4	Scan Class: A
			Off Label: Off	On Label: On				

Tag Name	Tag Type	Description						
PCU-2\COM-2_OCS	Digital	COMMUN. WITH OCS IGNORED	Alarmed: Yes	Security: *	Device Tag	Node Name: PCU-2	Address: N14:0/2	Scan Class: A
			Off Label: Off	On Label: On				
PCU-2\COM-2_OCS_ACK	Digital	COMMUN. WITH OCS IGNORED ACKNOWLEDGE	Alarmed: No	Security: *	Device Tag	Node Name: PCU-2	Address: N14:210/5	Scan Class: A
			Off Label: Off	On Label: On				
PCU-2\COM-OCS_2	Digital	COMMUN. WITH PCU-2 IGNORED - DETECTED AT OCS	Alarmed: Yes	Security: *	Memory Tag	Initial Value: Off		
			Off Label: Off	On Label: On				
PCU-2\COM-OCS_2_ACK	Digital	COMMUN. WITH PCU-2 IGNORED - DETECTED AT OCS ACKNOWLEDGE	Alarmed: No	Security: *	Memory Tag	Initial Value: Off		
			Off Label: Off	On Label: On				
PCU-2\COM_OCS_2_MNT	Digital	Communiations failure with the PLC detected in this OIT	Alarmed: Yes	Security: *	Memory Tag	Initial Value: Off		
			Off Label: Off	On Label: On				
PCU-2\COM_OCS_2_OPR	Digital	Communiations failure with the PLC detected in this OIT	Alarmed: Yes	Security: *	Memory Tag	Initial Value: Off		
			Off Label: Off	On Label: On				
PCU-2\FAH-3125A1	Digital	LOW AIR FLOW PUMP SEAL PUMP P-3125A [OFF = ALARM] Y76	Alarmed: Yes	Security: *	Device Tag	Node Name: PCU-2	Address: N14:22/0	Scan Class: A
			Off Label: Off	On Label: On				
PCU-2\FAH-3125A1_ACK	Digital	LOW AIR FLOW PUMP SEAL PUMP P-3125A [OFF = ALARM] Y76 ACKNOWLEDGE	Alarmed: No	Security: *	Device Tag	Node Name: PCU-2	Address: N14:210/7	Scan Class: A
			Off Label: Off	On Label: On				
PCU-2\FAH-3125A2	Digital	LOW AIR FLOW PUMP SEAL PUMP P-3125A [OFF = ALARM] Y76	Alarmed: Yes	Security: *	Device Tag	Node Name: PCU-2	Address: N14:22/1	Scan Class: A
			Off Label: Off	On Label: On				
PCU-2\FAH-3125A2_ACK	Digital	LOW AIR FLOW PUMP SEAL PUMP P-3125A [OFF = ALARM] Y76 ACKNOWLEDGE	Alarmed: No	Security: *	Device Tag	Node Name: PCU-2	Address: N14:210/8	Scan Class: A
			Off Label: Off	On Label: On				
PCU-2\FAH-3125B1	Digital	LOW AIR FLOW PUMP SEAL PUMP P-3125B [OFF = ALARM] Y76	Alarmed: Yes	Security: *	Device Tag	Node Name: PCU-2	Address: N14:22/2	Scan Class: A
			Off Label: Off	On Label: On				
PCU-2\FAH-3125B1_ACK	Digital	LOW AIR FLOW PUMP SEAL PUMP P-3125B [OFF = ALARM] Y76 ACKNOWLEDGE	Alarmed: No	Security: *	Device Tag	Node Name: PCU-2	Address: N14:210/9	Scan Class: A
			Off Label: Off	On Label: On				
PCU-2\FAH-3125B2	Digital	LOW AIR FLOW PUMP SEAL PUMP P-3125B [OFF = ALARM] Y76	Alarmed: Yes	Security: *	Device Tag	Node Name: PCU-2	Address: N14:22/3	Scan Class: A
			Off Label: Off	On Label: On				
PCU-2\FAH-3125B2_ACK	Digital	LOW AIR FLOW PUMP SEAL PUMP P-3125B [OFF = ALARM] Y76 ACKNOWLEDGE	Alarmed: No	Security: *	Device Tag	Node Name: PCU-2	Address: N14:210/10	Scan Class: A
			Off Label: Off	On Label: On				
PCU-2\FIC-3125	Analog	PUMP P-3125 A/B OUTLET FLOW	Alarmed: No	Security: *	Device Tag	Node Name: PCU-2	Address: N14:46	Scan Class: A
			Minimum : 0	Maximum : 240	Scale : 1	Offset : 0	Units: GPM	Data Type: Integer
PCU-2\FIC-3125-E	Analog	PUMP P-3125 A/B PID CONTROL ERROR	Alarmed: No	Security: *	Device Tag	Node Name: PCU-2	Address: N14:78	Scan Class: A
			Minimum : -240	Maximum : 240	Scale : 1	Offset : 0	Units: GPM	Data Type: Integer
PCU-2\FIC-3125-O	Analog	PUMP P-3125 A/B OUTLET FLOW / DRIVE SPEED REF OUTPUT	Alarmed: No	Security: *	Device Tag	Node Name: PCU-2	Address: N14:79	Scan Class: A
			Minimum : 0	Maximum : 3600	Scale : 1	Offset : 0	Units: RPM	Data Type: Integer

Tag Name	Tag Type	Description						
PCU-2\FIC-3125_A	Digital	PCU-2 INPUT ANALOG OVER OR UNDER RANGE ALARM	Alarmed: Yes	Security: *	Device Tag	Node Name: PCU-2	Address: N14:13/0	Scan Class: A
			Off Label: Off	On Label: On				
PCU-2\FIC-3125_A_ACK	Digital	PCU-2 INPUT ANALOG OVER OR UNDER RANGE ALARM ACKNOWLEDGE	Alarmed: No	Security: *	Device Tag	Node Name: PCU-2	Address: N14:210/11	Scan Class: A
			Off Label: Off	On Label: On				
PCU-2\FIC-3125A	Analog	PUMP P-3125A OUTLET FLOW CONTROL SIGNAL [DRIVE SPEED]	Alarmed: No	Security: *	Device Tag	Node Name: PCU-2	Address: N14:62	Scan Class: A
			Minimum : 0	Maximum : 3600	Scale : 1	Offset : 0	Units: RPM	Data Type: Integer
PCU-2\FIC-3125B	Analog	PUMP P-3125B OUTLET FLOW CONTROL SIGNAL [DRIVE SPEED]	Alarmed: No	Security: *	Device Tag	Node Name: PCU-2	Address: N14:63	Scan Class: A
			Minimum : 0	Maximum : 3600	Scale : 1	Offset : 0	Units: GPM	Data Type: Integer
PCU-2\HB_COMM_CNT	Analog	Communications checking counter	Alarmed: No	Security: *	Memory Tag	Initial Value: 0		
			Minimum : 0	Maximum : 100	Scale : 1	Offset : 0	Units:	Data Type: (Default)
PCU-2\HB_COMM_OK	Digital	Communications from PLC currently OK	Alarmed: No	Security: *	Memory Tag	Initial Value: Off		
			Off Label: Off	On Label: On				
PCU-2\HB_COMM_TIME	Analog	ACCUMULATED TIME FOR THE COMMUNICATION CHECK HEART-BEAT	Alarmed: No	Security: *	Memory Tag	Initial Value: 0		
			Minimum : 0	Maximum : 100	Scale : 1	Offset : 0	Units:	Data Type: Integer
PCU-2\HB_OCS_PLC2	Digital	HEARTBEAT FROM OCS TO PLC-2	Alarmed: No	Security: *	Device Tag	Node Name: PCU-2	Address: N14:120/0	Scan Class: A
			Off Label: Off	On Label: On				
PCU-2\HB_OCS_PLC2_MNT	Analog	COMMUN. HEARTBEAT REGISTER FROM MAINTENANCE OIT TO PCU-2	Alarmed: No	Security: *	Device Tag	Node Name: PCU-2	Address: N14:135	Scan Class: A
			Minimum : 0	Maximum : 32767	Scale : 1	Offset : 0	Units: N/A	Data Type: Integer
PCU-2\HB_OCS_PLC2_OPR	Analog	COMMUN. HEARTBEAT REGISTER FROM OPERATIONS OIT TO PCU-2	Alarmed: No	Security: *	Device Tag	Node Name: PCU-2	Address: N14:134	Scan Class: A
			Minimum : 0	Maximum : 32767	Scale : 1	Offset : 0	Units: N/A	Data Type: Integer
PCU-2\HB_PLC2_OCS	Digital	HEARTBEAT FROM PLC-2 TO OCS	Alarmed: No	Security: *	Device Tag	Node Name: PCU-2	Address: N14:0/0	Scan Class: A
			Off Label: Off	On Label: On				
PCU-2\HB_PLC2_OCS_BOTH	Analog	COMMUN. HEARTBEAT REGISTER FROM PCU-2 TO BOTH OPERATOR TERMINALS	Alarmed: No	Security: *	Device Tag	Node Name: PCU-2	Address: N14:15	Scan Class: A
			Minimum : 0	Maximum : 32767	Scale : 1	Offset : 0	Units: N/A	Data Type: Integer
PCU-2\HB_REF	Analog	Communications heartbeat reference register	Alarmed: No	Security: *	Memory Tag	Initial Value: 0		
			Minimum : 0	Maximum : 32767	Scale : 1	Offset : 0	Units:	Data Type: (Default)
PCU-2\HS-3125-M	Digital	PID FOR PUMP P-3125 A/B MANUAL MODE	Alarmed: No	Security: *	Device Tag	Node Name: PCU-2	Address: N14:126/4	Scan Class: A
			Off Label: Off	On Label: On				
PCU-2\HS-3125A1	Digital	START BOOSTER PUMP P-3125A Y-74.1	Alarmed: No	Security: *	Device Tag	Node Name: PCU-2	Address: N14:126/0	Scan Class: A
			Off Label: Off	On Label: On				
PCU-2\HS-3125A2	Digital	STOP BOOSTER PUMP P-3125A Y-74.1	Alarmed: No	Security: *	Device Tag	Node Name: PCU-2	Address: N14:126/1	Scan Class: A
			Off Label: Off	On Label: On				
PCU-2\HS-3125AA1	Digital	OPEN VALVE MOV-3125AA Y-79.1	Alarmed: No	Security: *	Device Tag	Node Name: PCU-2	Address: N14:126/6	Scan Class: A
			Off Label: Off	On Label: On				

Tag Name	Tag Type	Description						
PCU-2\HS-3125AA 2	Digital	CLOSE VALVE MOV-3125AA Y-79.1	Alarmed: No	Security: *	Device Tag	Node Name: PCU-2	Address: N14:126/7	Scan Class: A
			Off Label: Off	On Label: On				
PCU-2\HS-3125AB 1	Digital	OPEN VALVE MOV-3125AB Y-79.1	Alarmed: No	Security: *	Device Tag	Node Name: PCU-2	Address: N14:126/8	Scan Class: A
			Off Label: Off	On Label: On				
PCU-2\HS-3125AB 2	Digital	CLOSE VALVE MOV-3125AB Y-79.1	Alarmed: No	Security: *	Device Tag	Node Name: PCU-2	Address: N14:126/9	Scan Class: A
			Off Label: Off	On Label: On				
PCU-2\HS-3125AC 1	Digital	OPEN VALVE MOV-3125AC Y-79.1	Alarmed: No	Security: *	Device Tag	Node Name: PCU-2	Address: N14:126/10	Scan Class: A
			Off Label: Off	On Label: On				
PCU-2\HS-3125AC 2	Digital	CLOSE VALVE MOV-3125AC Y-79.1	Alarmed: No	Security: *	Device Tag	Node Name: PCU-2	Address: N14:126/11	Scan Class: A
			Off Label: Off	On Label: On				
PCU-2\HS-3125AD 1	Digital	OPEN VALVE MOV-3125AD Y-79.1	Alarmed: No	Security: *	Device Tag	Node Name: PCU-2	Address: N14:126/12	Scan Class: A
			Off Label: Off	On Label: On				
PCU-2\HS-3125AD 2	Digital	CLOSE VALVE MOV-3125AD Y-79.1	Alarmed: No	Security: *	Device Tag	Node Name: PCU-2	Address: N14:126/13	Scan Class: A
			Off Label: Off	On Label: On				
PCU-2\HS-3125AE 1	Digital	OPEN VALVE MOV-3125AE Y-79.1	Alarmed: No	Security: *	Device Tag	Node Name: PCU-2	Address: N14:126/14	Scan Class: A
			Off Label: Off	On Label: On				
PCU-2\HS-3125AE 2	Digital	CLOSE VALVE MOV-3125AE Y-79.1	Alarmed: No	Security: *	Device Tag	Node Name: PCU-2	Address: N14:126/15	Scan Class: A
			Off Label: Off	On Label: On				
PCU-2\HS-3125AF 1	Digital	OPEN VALVE MOV-3125AF Y-79.1	Alarmed: No	Security: *	Device Tag	Node Name: PCU-2	Address: N14:127/0	Scan Class: A
			Off Label: Off	On Label: On				
PCU-2\HS-3125AF 2	Digital	CLOSE VALVE MOV-3125AF Y-79.1	Alarmed: No	Security: *	Device Tag	Node Name: PCU-2	Address: N14:127/1	Scan Class: A
			Off Label: Off	On Label: On				
PCU-2\HS-3125AG 1	Digital	OPEN VALVE MOV-3125AG Y-79.1	Alarmed: No	Security: *	Device Tag	Node Name: PCU-2	Address: N14:127/2	Scan Class: A
			Off Label: Off	On Label: On				
PCU-2\HS-3125AG 2	Digital	CLOSE VALVE MOV-3125AG Y-79.1	Alarmed: No	Security: *	Device Tag	Node Name: PCU-2	Address: N14:127/3	Scan Class: A
			Off Label: Off	On Label: On				
PCU-2\HS-3125AH 1	Digital	OPEN VALVE MOV-3125AH Y-79.1	Alarmed: No	Security: *	Device Tag	Node Name: PCU-2	Address: N14:127/4	Scan Class: A
			Off Label: Off	On Label: On				
PCU-2\HS-3125AH 2	Digital	CLOSE VALVE MOV-3125AH Y-79.1	Alarmed: No	Security: *	Device Tag	Node Name: PCU-2	Address: N14:127/5	Scan Class: A
			Off Label: Off	On Label: On				
PCU-2\HS-3125AJ1	Digital	OPEN VALVE MOV-3125AJ Y-79.2	Alarmed: No	Security: *	Device Tag	Node Name: PCU-2	Address: N14:127/6	Scan Class: A
			Off Label: Off	On Label: On				
PCU-2\HS-3125AJ2	Digital	CLOSE VALVE MOV-3125AJ Y-79.2	Alarmed: No	Security: *	Device Tag	Node Name: PCU-2	Address: N14:127/7	Scan Class: A
			Off Label: Off	On Label: On				
PCU-2\HS-3125AK 1	Digital	OPEN VALVE MOV-3125AK Y-79.2	Alarmed: No	Security: *	Device Tag	Node Name: PCU-2	Address: N14:127/8	Scan Class: A
			Off Label: Off	On Label: On				
PCU-2\HS-3125AK 2	Digital	CLOSE VALVE MOV-3125AK Y-79.2	Alarmed: No	Security: *	Device Tag	Node Name: PCU-2	Address: N14:127/9	Scan Class: A
			Off Label: Off	On Label: On				
PCU-2\HS-3125AZ	Digital	RESET VALVES FOR PUMP P-3125A Y-79.1	Alarmed: No	Security: *	Device Tag	Node Name: PCU-2	Address: N14:126/5	Scan Class: A
			Off Label: Off	On Label: On				

Tag Name	Tag Type	Description						
PCU-2\HS-3125B1	Digital	START BOOSTER PUMP P-3125B Y-74.2	Alarmed: No	Security: *	Device Tag	Node Name: PCU-2	Address: N14:126/2	Scan Class: A
			Off Label: Off	On Label: On				
PCU-2\HS-3125B2	Digital	STOP BOOSTER PUMP P-3125B Y-74.2	Alarmed: No	Security: *	Device Tag	Node Name: PCU-2	Address: N14:126/3	Scan Class: A
			Off Label: Off	On Label: On				
PCU-2\HS-3125BA 1	Digital	OPEN VALVE MOV-3125BA Y-80.1	Alarmed: No	Security: *	Device Tag	Node Name: PCU-2	Address: N14:129/6	Scan Class: A
			Off Label: Off	On Label: On				
PCU-2\HS-3125BA 2	Digital	CLOSE VALVE MOV-3125BA Y-80.1	Alarmed: No	Security: *	Device Tag	Node Name: PCU-2	Address: N14:129/7	Scan Class: A
			Off Label: Off	On Label: On				
PCU-2\HS-3125BB 1	Digital	OPEN VALVE MOV-3125BB Y-80.1	Alarmed: No	Security: *	Device Tag	Node Name: PCU-2	Address: N14:129/8	Scan Class: A
			Off Label: Off	On Label: On				
PCU-2\HS-3125BB 2	Digital	CLOSE VALVE MOV-3125BB Y-80.1	Alarmed: No	Security: *	Device Tag	Node Name: PCU-2	Address: N14:129/9	Scan Class: A
			Off Label: Off	On Label: On				
PCU-2\HS-3125BC 1	Digital	OPEN VALVE MOV-3125BC Y-80.1	Alarmed: No	Security: *	Device Tag	Node Name: PCU-2	Address: N14:129/10	Scan Class: A
			Off Label: Off	On Label: On				
PCU-2\HS-3125BC 2	Digital	CLOSE VALVE MOV-3125BC Y-80.1	Alarmed: No	Security: *	Device Tag	Node Name: PCU-2	Address: N14:129/11	Scan Class: A
			Off Label: Off	On Label: On				
PCU-2\HS-3125BD 1	Digital	OPEN VALVE MOV-3125BD Y-80.1	Alarmed: No	Security: *	Device Tag	Node Name: PCU-2	Address: N14:129/12	Scan Class: A
			Off Label: Off	On Label: On				
PCU-2\HS-3125BD 2	Digital	CLOSE VALVE MOV-3125BD Y-80.1	Alarmed: No	Security: *	Device Tag	Node Name: PCU-2	Address: N14:129/13	Scan Class: A
			Off Label: Off	On Label: On				
PCU-2\HS-3125BE 1	Digital	OPEN VALVE MOV-3125BE Y-80.1	Alarmed: No	Security: *	Device Tag	Node Name: PCU-2	Address: N14:129/14	Scan Class: A
			Off Label: Off	On Label: On				
PCU-2\HS-3125BE 2	Digital	CLOSE VALVE MOV-3125BE Y-80.1	Alarmed: No	Security: *	Device Tag	Node Name: PCU-2	Address: N14:129/15	Scan Class: A
			Off Label: Off	On Label: On				
PCU-2\HS-3125BF 1	Digital	OPEN VALVE MOV-3125BF Y-80.1	Alarmed: No	Security: *	Device Tag	Node Name: PCU-2	Address: N14:130/0	Scan Class: A
			Off Label: Off	On Label: On				
PCU-2\HS-3125BF 2	Digital	CLOSE VALVE MOV-3125BF Y-80.1	Alarmed: No	Security: *	Device Tag	Node Name: PCU-2	Address: N14:130/1	Scan Class: A
			Off Label: Off	On Label: On				
PCU-2\HS-3125BG 1	Digital	OPEN VALVE MOV-3125BG Y-80.1	Alarmed: No	Security: *	Device Tag	Node Name: PCU-2	Address: N14:130/2	Scan Class: A
			Off Label: Off	On Label: On				
PCU-2\HS-3125BG 2	Digital	CLOSE VALVE MOV-3125BG Y-80.1	Alarmed: No	Security: *	Device Tag	Node Name: PCU-2	Address: N14:130/3	Scan Class: A
			Off Label: Off	On Label: On				
PCU-2\HS-3125BH 1	Digital	OPEN VALVE MOV-3125BH Y-80.1	Alarmed: No	Security: *	Device Tag	Node Name: PCU-2	Address: N14:130/4	Scan Class: A
			Off Label: Off	On Label: On				
PCU-2\HS-3125BH 2	Digital	CLOSE VALVE MOV-3125BH Y-80.1	Alarmed: No	Security: *	Device Tag	Node Name: PCU-2	Address: N14:130/5	Scan Class: A
			Off Label: Off	On Label: On				
PCU-2\HS-3125BJ1	Digital	OPEN VALVE MOV-3125BJ Y-80.2	Alarmed: No	Security: *	Device Tag	Node Name: PCU-2	Address: N14:130/6	Scan Class: A
			Off Label: Off	On Label: On				
PCU-2\HS-3125BJ2	Digital	CLOSE VALVE MOV-3125BJ Y-80.2	Alarmed: No	Security: *	Device Tag	Node Name: PCU-2	Address: N14:130/7	Scan Class: A
			Off Label: Off	On Label: On				

Tag Name	Tag Type	Description						
PCU-2\HS-3125BK 1	Digital	OPEN VALVE MOV-3125BK Y-80.2	Alarmed: No	Security: *	Device Tag	Node Name: PCU-2	Address: N14:130/8	Scan Class: A
			Off Label: Off	On Label: On				
PCU-2\HS-3125BK 2	Digital	CLOSE VALVE MOV-3125BK Y-80.2	Alarmed: No	Security: *	Device Tag	Node Name: PCU-2	Address: N14:130/9	Scan Class: A
			Off Label: Off	On Label: On				
PCU-2\HS-3125BY	Digital	INITIATE DRAINING OF PUMP P-3125B Y-80.1	Alarmed: No	Security: *	Device Tag	Node Name: PCU-2	Address: N14:127/12	Scan Class: A
			Off Label: Off	On Label: On				
PCU-2\HS-3125BZ	Digital	RESET VALVES FOR PUMP P-3125B Y-80.1	Alarmed: No	Security: *	Device Tag	Node Name: PCU-2	Address: N14:127/13	Scan Class: A
			Off Label: Off	On Label: On				
PCU-2\HS-3125C1	Digital	OPEN VALVE SOV-3125C Y-84.1	Alarmed: No	Security: *	Device Tag	Node Name: PCU-2	Address: N14:128/4	Scan Class: A
			Off Label: Off	On Label: On				
PCU-2\HS-3125C2	Digital	CLOSE VALVE SOV-3125C Y-84.1	Alarmed: No	Security: *	Device Tag	Node Name: PCU-2	Address: N14:128/5	Scan Class: A
			Off Label: Off	On Label: On				
PCU-2\HS-3125D1	Digital	OPEN VALVE SOV-3125D Y-84.1	Alarmed: No	Security: *	Device Tag	Node Name: PCU-2	Address: N14:128/8	Scan Class: A
			Off Label: Off	On Label: On				
PCU-2\HS-3125D2	Digital	CLOSE VALVE SOV-3125D Y-84.1	Alarmed: No	Security: *	Device Tag	Node Name: PCU-2	Address: N14:128/9	Scan Class: A
			Off Label: Off	On Label: On				
PCU-2\HS-3125E1	Digital	OPEN VALVE SOV-3125E Y-83.1	Alarmed: No	Security: *	Device Tag	Node Name: PCU-2	Address: N14:128/2	Scan Class: A
			Off Label: Off	On Label: On				
PCU-2\HS-3125E2	Digital	CLOSE VALVE SOV-3125E Y-83.1	Alarmed: No	Security: *	Device Tag	Node Name: PCU-2	Address: N14:128/3	Scan Class: A
			Off Label: Off	On Label: On				
PCU-2\HS-3125G1	Digital	OPEN VALVE SOV-3125G Y-84.1	Alarmed: No	Security: *	Device Tag	Node Name: PCU-2	Address: N14:128/6	Scan Class: A
			Off Label: Off	On Label: On				
PCU-2\HS-3125G2	Digital	CLOSE VALVE SOV-3125G Y-84.1	Alarmed: No	Security: *	Device Tag	Node Name: PCU-2	Address: N14:128/7	Scan Class: A
			Off Label: Off	On Label: On				
PCU-2\HS-3156A1	Digital	OPEN VALVE MOV-3156A Y-89.1	Alarmed: No	Security: *	Device Tag	Node Name: PCU-2	Address: N14:128/14	Scan Class: A
			Off Label: Off	On Label: On				
PCU-2\HS-3156A2	Digital	CLOSE VALVE MOV-3156A Y-89.1	Alarmed: No	Security: *	Device Tag	Node Name: PCU-2	Address: N14:128/15	Scan Class: A
			Off Label: Off	On Label: On				
PCU-2\HS-3156B1	Digital	OPEN VALVE MOV-3156B Y-89.2	Alarmed: No	Security: *	Device Tag	Node Name: PCU-2	Address: N14:129/0	Scan Class: A
			Off Label: Off	On Label: On				
PCU-2\HS-3156B2	Digital	CLOSE VALVE MOV-3156B Y-89.2	Alarmed: No	Security: *	Device Tag	Node Name: PCU-2	Address: N14:129/1	Scan Class: A
			Off Label: Off	On Label: On				
PCU-2\HS-3163-1	Digital	OPEN VALVE MOV-3163 Y-79.2	Alarmed: No	Security: *	Device Tag	Node Name: PCU-2	Address: N14:127/10	Scan Class: A
			Off Label: Off	On Label: On				
PCU-2\HS-3163-2	Digital	CLOSE VALVE MOV-3163 Y-79.2	Alarmed: No	Security: *	Device Tag	Node Name: PCU-2	Address: N14:127/11	Scan Class: A
			Off Label: Off	On Label: On				
PCU-2\HS-3173A1	Digital	OPEN VALVE SOV-3173A Y-87.1	Alarmed: No	Security: *	Device Tag	Node Name: PCU-2	Address: N14:128/10	Scan Class: A
			Off Label: Off	On Label: On				
PCU-2\HS-3173A2	Digital	CLOSE VALVE SOV-3173A Y-87.1	Alarmed: No	Security: *	Device Tag	Node Name: PCU-2	Address: N14:128/11	Scan Class: A
			Off Label: Off	On Label: On				
PCU-2\HS-3173B1	Digital	OPEN VALVE SOV-3173B Y-87.2	Alarmed: No	Security: *	Device Tag	Node Name: PCU-2	Address: N14:128/12	Scan Class: A
			Off Label: Off	On Label: On				
PCU-2\HS-3173B2	Digital	CLOSE VALVE SOV-3173B Y-87.2	Alarmed: No	Security: *	Device Tag	Node Name: PCU-2	Address: N14:128/13	Scan Class: A
			Off Label: Off	On Label: On				
PCU-2\HS-3182A1	Digital	OCS OPEN VALVE SOV-3182A Y-71.1	Alarmed: No	Security: *	Device Tag	Node Name: PCU-2	Address: N14:120/14	Scan Class: A
			Off Label: Off	On Label: On				

Tag Name	Tag Type	Description						
PCU-2\HS-3182A2	Digital	OCS CLOSE VALVE SOV-3182A Y-71.1	Alarmed: No	Security: *	Device Tag	Node Name: PCU-2	Address: N14:120/15	Scan Class: A
			Off Label: Off	On Label: On				
PCU-2\HS-3182B1	Digital	OCS OPEN VALVE SOV-3182B Y-71.1	Alarmed: No	Security: *	Device Tag	Node Name: PCU-2	Address: N14:121/3	Scan Class: A
			Off Label: Off	On Label: On				
PCU-2\HS-3182B2	Digital	OCS CLOSE VALVE SOV-3182B Y-71.1	Alarmed: No	Security: *	Device Tag	Node Name: PCU-2	Address: N14:121/4	Scan Class: A
			Off Label: Off	On Label: On				
PCU-2\HS-3183A1	Digital	OCS OPEN VALVE SOV-3183A Y-71.1	Alarmed: No	Security: *	Device Tag	Node Name: PCU-2	Address: N14:121/5	Scan Class: A
			Off Label: Off	On Label: On				
PCU-2\HS-3183A2	Digital	OCS CLOSE VALVE SOV-3183A Y-71.1	Alarmed: No	Security: *	Device Tag	Node Name: PCU-2	Address: N14:121/6	Scan Class: A
			Off Label: Off	On Label: On				
PCU-2\HS-3183B1	Digital	OCS OPEN VALVE SOV-3183B Y-71.1	Alarmed: No	Security: *	Device Tag	Node Name: PCU-2	Address: N14:121/7	Scan Class: A
			Off Label: Off	On Label: On				
PCU-2\HS-3183B2	Digital	OCS CLOSE VALVE SOV-3183B Y-71.1	Alarmed: No	Security: *	Device Tag	Node Name: PCU-2	Address: N14:121/8	Scan Class: A
			Off Label: Off	On Label: On				
PCU-2\HS-3184-1	Digital	OCS OPEN VALVE SOV-3184 Y-71.1	Alarmed: No	Security: *	Device Tag	Node Name: PCU-2	Address: N14:121/9	Scan Class: A
			Off Label: Off	On Label: On				
PCU-2\HS-3184-2	Digital	OCS CLOSE VALVE SOV-3184 Y-71.1	Alarmed: No	Security: *	Device Tag	Node Name: PCU-2	Address: N14:121/10	Scan Class: A
			Off Label: Off	On Label: On				
PCU-2\LAL-3125A1	Digital	PUMP P-3125A LOW OIL LEVEL [OFF = ALARM] Y76	Alarmed: Yes	Security: *	Device Tag	Node Name: PCU-2	Address: N14:22/4	Scan Class: A
			Off Label: Off	On Label: On				
PCU-2\LAL-3125A1_ACK	Digital	PUMP P-3125A LOW OIL LEVEL [OFF = ALARM] Y76 ACKNOWLEDGE	Alarmed: No	Security: *	Device Tag	Node Name: PCU-2	Address: N14:210/12	Scan Class: A
			Off Label: Off	On Label: On				
PCU-2\LAL-3125A2	Digital	PUMP P-3125A LOW OIL LEVEL [OFF = ALARM] Y76	Alarmed: Yes	Security: *	Device Tag	Node Name: PCU-2	Address: N14:22/5	Scan Class: A
			Off Label: Off	On Label: On				
PCU-2\LAL-3125A2_ACK	Digital	PUMP P-3125A LOW OIL LEVEL [OFF = ALARM] Y76 ACKNOWLEDGE	Alarmed: No	Security: *	Device Tag	Node Name: PCU-2	Address: N14:210/13	Scan Class: A
			Off Label: Off	On Label: On				
PCU-2\LAL-3125B1	Digital	PUMP P-3125B LOW OIL LEVEL [OFF = ALARM] Y76	Alarmed: Yes	Security: *	Device Tag	Node Name: PCU-2	Address: N14:22/6	Scan Class: A
			Off Label: Off	On Label: On				
PCU-2\LAL-3125B1_ACK	Digital	PUMP P-3125B LOW OIL LEVEL [OFF = ALARM] Y76 ACKNOWLEDGE	Alarmed: No	Security: *	Device Tag	Node Name: PCU-2	Address: N14:210/14	Scan Class: A
			Off Label: Off	On Label: On				
PCU-2\LAL-3125B2	Digital	PUMP P-3125B LOW OIL LEVEL [OFF = ALARM] Y76	Alarmed: Yes	Security: *	Device Tag	Node Name: PCU-2	Address: N14:22/7	Scan Class: A
			Off Label: Off	On Label: On				
PCU-2\LAL-3125B2_ACK	Digital	PUMP P-3125B LOW OIL LEVEL [OFF = ALARM] Y76 ACKNOWLEDGE	Alarmed: No	Security: *	Device Tag	Node Name: PCU-2	Address: N14:210/15	Scan Class: A
			Off Label: Off	On Label: On				
PCU-2\LDA-3150	Digital	LEAK DETECTED AT DIVERSION BOX 6241-A SUMP Y-72.1	Alarmed: Yes	Security: *	Device Tag	Node Name: PCU-2	Address: N14:0/13	Scan Class: A
			Off Label: Off	On Label: On				

Tag Name	Tag Type	Description						
PCU-2\LDA-3150_ACK	Digital	LEAK DETECTED AT DIVERSION BOX 6241-A SUMP Y-72.1 ACKNOWLEDGE	Alarmed: No	Security: *	Device Tag	Node Name: PCU-2	Address: N14:211/0	Scan Class: A
			Off Label: Off	On Label: On				
PCU-2\LDA-3160	Digital	6241-A ENCASEMENT LEAK DETECTION [OFF = ALARM] Y72	Alarmed: Yes	Security: *	Device Tag	Node Name: PCU-2	Address: N14:22/9	Scan Class: A
			Off Label: Off	On Label: On				
PCU-2\LDA-3160_ACK	Digital	6241-A ENCASEMENT LEAK DETECTION [OFF = ALARM] Y72 ACKNOWLEDGE	Alarmed: No	Security: *	Device Tag	Node Name: PCU-2	Address: N14:211/1	Scan Class: A
			Off Label: Off	On Label: On				
PCU-2\LDAH-3150	Digital	6241-A SUMP LEAK DETECTION Y72	Alarmed: No	Security: *	Device Tag	Node Name: PCU-2	Address: N14:22/8	Scan Class: A
			Off Label: Off	On Label: On				
PCU-2\LDXA-3150	Digital	SUMP LEAK DETECTOR Y72	Alarmed: No	Security: *	Device Tag	Node Name: PCU-2	Address: N14:22/10	Scan Class: A
			Off Label: Off	On Label: On				
PCU-2\MOV-3125AA1	Digital	OPEN VALVE MOV-3125AA Y79-1	Alarmed: No	Security: *	Device Tag	Node Name: PCU-2	Address: N14:26/0	Scan Class: A
			Off Label: Off	On Label: On				
PCU-2\MOV-3125AA2	Digital	CLOSE VALVE MOV-3125AA Y79-1	Alarmed: No	Security: *	Device Tag	Node Name: PCU-2	Address: N14:26/1	Scan Class: A
			Off Label: Off	On Label: On				
PCU-2\MOV-3125AB1	Digital	OPEN VALVE MOV-3125AB Y79-1	Alarmed: No	Security: *	Device Tag	Node Name: PCU-2	Address: N14:26/2	Scan Class: A
			Off Label: Off	On Label: On				
PCU-2\MOV-3125AB2	Digital	CLOSE VALVE MOV-3125AB Y79-1	Alarmed: No	Security: *	Device Tag	Node Name: PCU-2	Address: N14:26/3	Scan Class: A
			Off Label: Off	On Label: On				
PCU-2\MOV-3125AC1	Digital	OPEN VALVE MOV-3125AC Y79-1	Alarmed: No	Security: *	Device Tag	Node Name: PCU-2	Address: N14:26/4	Scan Class: A
			Off Label: Off	On Label: On				
PCU-2\MOV-3125AC2	Digital	CLOSE VALVE MOV-3125AC Y79-1	Alarmed: No	Security: *	Device Tag	Node Name: PCU-2	Address: N14:26/5	Scan Class: A
			Off Label: Off	On Label: On				
PCU-2\MOV-3125AD1	Digital	OPEN VALVE MOV-3125AD Y79-1	Alarmed: No	Security: *	Device Tag	Node Name: PCU-2	Address: N14:26/6	Scan Class: A
			Off Label: Off	On Label: On				
PCU-2\MOV-3125AD2	Digital	CLOSE VALVE MOV-3125AD Y79-1	Alarmed: No	Security: *	Device Tag	Node Name: PCU-2	Address: N14:26/7	Scan Class: A
			Off Label: Off	On Label: On				
PCU-2\MOV-3125AE1	Digital	OPEN VALVE MOV-3125AE Y79-1	Alarmed: No	Security: *	Device Tag	Node Name: PCU-2	Address: N14:26/8	Scan Class: A
			Off Label: Off	On Label: On				
PCU-2\MOV-3125AE2	Digital	CLOSE VALVE MOV-3125AE Y79-1	Alarmed: No	Security: *	Device Tag	Node Name: PCU-2	Address: N14:26/9	Scan Class: A
			Off Label: Off	On Label: On				
PCU-2\MOV-3125AF1	Digital	OPEN VALVE MOV-3125AF Y79-1	Alarmed: No	Security: *	Device Tag	Node Name: PCU-2	Address: N14:26/10	Scan Class: A
			Off Label: Off	On Label: On				
PCU-2\MOV-3125AF2	Digital	CLOSE VALVE MOV-3125AF Y79-1	Alarmed: No	Security: *	Device Tag	Node Name: PCU-2	Address: N14:26/11	Scan Class: A
			Off Label: Off	On Label: On				
PCU-2\MOV-3125AG1	Digital	OPEN VALVE MOV-3125AG Y79-1	Alarmed: No	Security: *	Device Tag	Node Name: PCU-2	Address: N14:26/12	Scan Class: A
			Off Label: Off	On Label: On				

Tag Name	Tag Type	Description						
PCU-2\MOV-3125AG2	Digital	CLOSE VALVE MOV-3125AG Y79-1	Alarmed: No	Security: *	Device Tag	Node Name: PCU-2	Address: N14:26/13	Scan Class: A
			Off Label: Off	On Label: On				
PCU-2\MOV-3125AH1	Digital	OPEN VALVE MOV-3125AH Y79-1	Alarmed: No	Security: *	Device Tag	Node Name: PCU-2	Address: N14:26/14	Scan Class: A
			Off Label: Off	On Label: On				
PCU-2\MOV-3125AH2	Digital	CLOSE VALVE MOV-3125AH Y79-1	Alarmed: No	Security: *	Device Tag	Node Name: PCU-2	Address: N14:26/15	Scan Class: A
			Off Label: Off	On Label: On				
PCU-2\MOV-3125AJ1	Digital	OPEN VALVE MOV-3125AJ Y79-2	Alarmed: No	Security: *	Device Tag	Node Name: PCU-2	Address: N14:27/0	Scan Class: A
			Off Label: Off	On Label: On				
PCU-2\MOV-3125AJ2	Digital	CLOSE VALVE MOV-3125AJ Y79-2	Alarmed: No	Security: *	Device Tag	Node Name: PCU-2	Address: N14:27/1	Scan Class: A
			Off Label: Off	On Label: On				
PCU-2\MOV-3125AK1	Digital	OPEN VALVE MOV-3125AK Y79-2	Alarmed: No	Security: *	Device Tag	Node Name: PCU-2	Address: N14:27/2	Scan Class: A
			Off Label: Off	On Label: On				
PCU-2\MOV-3125AK2	Digital	CLOSE VALVE MOV-3125AK Y79-2	Alarmed: No	Security: *	Device Tag	Node Name: PCU-2	Address: N14:27/3	Scan Class: A
			Off Label: Off	On Label: On				
PCU-2\MOV-3125BA1	Digital	OPEN VALVE MOV-3125BA Y80-1	Alarmed: No	Security: *	Device Tag	Node Name: PCU-2	Address: N14:25/0	Scan Class: A
			Off Label: Off	On Label: On				
PCU-2\MOV-3125BA2	Digital	CLOSE VALVE MOV-3125BA Y80-1	Alarmed: No	Security: *	Device Tag	Node Name: PCU-2	Address: N14:25/1	Scan Class: A
			Off Label: Off	On Label: On				
PCU-2\MOV-3125BB1	Digital	OPEN VALVE MOV-3125BB Y80-1	Alarmed: No	Security: *	Device Tag	Node Name: PCU-2	Address: N14:25/2	Scan Class: A
			Off Label: Off	On Label: On				
PCU-2\MOV-3125BB2	Digital	CLOSE VALVE MOV-3125BB Y80-1	Alarmed: No	Security: *	Device Tag	Node Name: PCU-2	Address: N14:25/3	Scan Class: A
			Off Label: Off	On Label: On				
PCU-2\MOV-3125BC1	Digital	OPEN VALVE MOV-3125BC Y80-1	Alarmed: No	Security: *	Device Tag	Node Name: PCU-2	Address: N14:25/4	Scan Class: A
			Off Label: Off	On Label: On				
PCU-2\MOV-3125BC2	Digital	CLOSE VALVE MOV-3125BC Y80-1	Alarmed: No	Security: *	Device Tag	Node Name: PCU-2	Address: N14:25/5	Scan Class: A
			Off Label: Off	On Label: On				
PCU-2\MOV-3125BD1	Digital	OPEN VALVE MOV-3125BD Y80-1	Alarmed: No	Security: *	Device Tag	Node Name: PCU-2	Address: N14:25/6	Scan Class: A
			Off Label: Off	On Label: On				
PCU-2\MOV-3125BD2	Digital	CLOSE VALVE MOV-3125BD Y80-1	Alarmed: No	Security: *	Device Tag	Node Name: PCU-2	Address: N14:25/7	Scan Class: A
			Off Label: Off	On Label: On				
PCU-2\MOV-3125BE1	Digital	OPEN VALVE MOV-3125BE Y80-1	Alarmed: No	Security: *	Device Tag	Node Name: PCU-2	Address: N14:25/8	Scan Class: A
			Off Label: Off	On Label: On				
PCU-2\MOV-3125BE2	Digital	CLOSE VALVE MOV-3125BE Y80-1	Alarmed: No	Security: *	Device Tag	Node Name: PCU-2	Address: N14:25/9	Scan Class: A
			Off Label: Off	On Label: On				
PCU-2\MOV-3125BF1	Digital	OPEN VALVE MOV-3125BF Y80-1	Alarmed: No	Security: *	Device Tag	Node Name: PCU-2	Address: N14:25/10	Scan Class: A
			Off Label: Off	On Label: On				
PCU-2\MOV-3125BF2	Digital	CLOSE VALVE MOV-3125BF Y80-1	Alarmed: No	Security: *	Device Tag	Node Name: PCU-2	Address: N14:25/11	Scan Class: A
			Off Label: Off	On Label: On				
PCU-2\MOV-3125BG1	Digital	OPEN VALVE MOV-3125BG Y80-1	Alarmed: No	Security: *	Device Tag	Node Name: PCU-2	Address: N14:25/12	Scan Class: A
			Off Label: Off	On Label: On				

Tag Name	Tag Type	Description						
PCU-2\MOV-3125BG2	Digital	CLOSE VALVE MOV-3125BG Y80-1	Alarmed: No	Security: *	Device Tag	Node Name: PCU-2	Address: N14:25/13	Scan Class: A
			Off Label: Off	On Label: On				
PCU-2\MOV-3125BH1	Digital	OPEN VALVE MOV-3125BH Y80-1	Alarmed: No	Security: *	Device Tag	Node Name: PCU-2	Address: N14:25/14	Scan Class: A
			Off Label: Off	On Label: On				
PCU-2\MOV-3125BH2	Digital	CLOSE VALVE MOV-3125BH Y80-1	Alarmed: No	Security: *	Device Tag	Node Name: PCU-2	Address: N14:25/15	Scan Class: A
			Off Label: Off	On Label: On				
PCU-2\MOV-3125BJ1	Digital	OPEN VALVE MOV-3125BJ Y80-2	Alarmed: No	Security: *	Device Tag	Node Name: PCU-2	Address: N14:27/4	Scan Class: A
			Off Label: Off	On Label: On				
PCU-2\MOV-3125BJ2	Digital	CLOSE VALVE MOV-3125BJ Y80-2	Alarmed: No	Security: *	Device Tag	Node Name: PCU-2	Address: N14:27/5	Scan Class: A
			Off Label: Off	On Label: On				
PCU-2\MOV-3125BK1	Digital	OPEN VALVE MOV-3125BK Y80-2	Alarmed: No	Security: *	Device Tag	Node Name: PCU-2	Address: N14:27/6	Scan Class: A
			Off Label: Off	On Label: On				
PCU-2\MOV-3125BK2	Digital	CLOSE VALVE MOV-3125BK Y80-2	Alarmed: No	Security: *	Device Tag	Node Name: PCU-2	Address: N14:27/7	Scan Class: A
			Off Label: Off	On Label: On				
PCU-2\MOV-3156A1	Digital	OPEN VALVE MOV-3156A Y89-1	Alarmed: No	Security: *	Device Tag	Node Name: PCU-2	Address: N14:28/10	Scan Class: A
			Off Label: Off	On Label: On				
PCU-2\MOV-3156A2	Digital	CLOSE VALVE MOV-3156A Y89-1	Alarmed: No	Security: *	Device Tag	Node Name: PCU-2	Address: N14:28/11	Scan Class: A
			Off Label: Off	On Label: On				
PCU-2\MOV-3156B1	Digital	OPEN VALVE MOV-3156B Y89-2	Alarmed: No	Security: *	Device Tag	Node Name: PCU-2	Address: N14:28/8	Scan Class: A
			Off Label: Off	On Label: On				
PCU-2\MOV-3156B2	Digital	CLOSE VALVE MOV-3156B Y89-2	Alarmed: No	Security: *	Device Tag	Node Name: PCU-2	Address: N14:28/9	Scan Class: A
			Off Label: Off	On Label: On				
PCU-2\P-3115	Digital	SHUTDOWN SUMP PUMP P-3115 Y-82.1	Alarmed: No	Security: *	Device Tag	Node Name: PCU-2	Address: N14:27/12	Scan Class: A
			Off Label: Off	On Label: On				
PCU-2\P-3125A1	Digital	START PUMP P-3125A Y74-1	Alarmed: No	Security: *	Device Tag	Node Name: PCU-2	Address: N14:27/8	Scan Class: A
			Off Label: Off	On Label: On				
PCU-2\P-3125A2	Digital	STOP PUMP P-3125A Y74-1	Alarmed: No	Security: *	Device Tag	Node Name: PCU-2	Address: N14:27/9	Scan Class: A
			Off Label: Off	On Label: On				
PCU-2\P-3125B1	Digital	START PUMP P-3125B Y74-2	Alarmed: No	Security: *	Device Tag	Node Name: PCU-2	Address: N14:27/10	Scan Class: A
			Off Label: Off	On Label: On				
PCU-2\P-3125B2	Digital	STOP PUMP P-3125B Y74-2	Alarmed: No	Security: *	Device Tag	Node Name: PCU-2	Address: N14:27/11	Scan Class: A
			Off Label: Off	On Label: On				
PCU-2\PAH-3125A	Digital	BOOSTER PUMP HIGH INLET PRESSURE Y-75.1	Alarmed: Yes	Security: *	Device Tag	Node Name: PCU-2	Address: N14:6/3	Scan Class: A
			Off Label: Off	On Label: On				
PCU-2\PAH-3125A_ACK	Digital	BOOSTER PUMP HIGH INLET PRESSURE Y-75.1 ACKNOWLEDGE	Alarmed: No	Security: *	Device Tag	Node Name: PCU-2	Address: N14:216/13	Scan Class: A
			Off Label: Off	On Label: On				
PCU-2\PAH-3125B	Digital	BOOSTER PUMP HIGH INLET PRESSURE Y-75.1	Alarmed: Yes	Security: *	Device Tag	Node Name: PCU-2	Address: N14:7/3	Scan Class: A
			Off Label: Off	On Label: On				
PCU-2\PAH-3125B_ACK	Digital	BOOSTER PUMP HIGH INLET PRESSURE Y-75.1 ACKNOWLEDGE	Alarmed: No	Security: *	Device Tag	Node Name: PCU-2	Address: N14:216/14	Scan Class: A
			Off Label: Off	On Label: On				
PCU-2\PAH-3125C	Digital	BOOSTER PUMP HIGH DISCHARGE PRESSURE Y-78.1	Alarmed: Yes	Security: *	Device Tag	Node Name: PCU-2	Address: N14:6/2	Scan Class: A
			Off Label: Off	On Label: On				

Tag Name	Tag Type	Description						
PCU-2\PAH-3125C_ACK	Digital	BOOSTER PUMP HIGH DISCHARGE PRESSURE Y-78.1 ACKNOWLEDGE	Alarmed: No	Security: *	Device Tag	Node Name: PCU-2	Address: N14:211/4	Scan Class: A
			Off Label: Off	On Label: On				
PCU-2\PAH-3125D	Digital	BOOSTER PUMP HIGH DISCHARGE PRESSURE Y-78.1	Alarmed: Yes	Security: *	Device Tag	Node Name: PCU-2	Address: N14:7/2	Scan Class: A
			Off Label: Off	On Label: On				
PCU-2\PAH-3125D_ACK	Digital	BOOSTER PUMP HIGH DISCHARGE PRESSURE Y-78.1 ACKNOWLEDGE	Alarmed: No	Security: *	Device Tag	Node Name: PCU-2	Address: N14:211/5	Scan Class: A
			Off Label: Off	On Label: On				
PCU-2\PAH-3173	Digital	VALVE SOV-3173A/B FAILURE Y-73.1	Alarmed: Yes	Security: *	Device Tag	Node Name: PCU-2	Address: N14:0/10	Scan Class: A
			Off Label: Off	On Label: On				
PCU-2\PAH-3173_ACK	Digital	VALVE SOV-3173A/B FAILURE Y-73.1 ACKNOWLEDGE	Alarmed: No	Security: *	Device Tag	Node Name: PCU-2	Address: N14:211/6	Scan Class: A
			Off Label: Off	On Label: On				
PCU-2\PAH-3182	Digital	VALVE SOV-3182A/B FAILURE	Alarmed: Yes	Security: *	Device Tag	Node Name: PCU-2	Address: N14:0/11	Scan Class: A
			Off Label: Off	On Label: On				
PCU-2\PAH-3182_ACK	Digital	VALVE SOV-3182A/B FAILURE ACKNOWLEDGE	Alarmed: No	Security: *	Device Tag	Node Name: PCU-2	Address: N14:211/7	Scan Class: A
			Off Label: Off	On Label: On				
PCU-2\PAH-3183	Digital	VALVE SOV-3183A/B FAILURE	Alarmed: Yes	Security: *	Device Tag	Node Name: PCU-2	Address: N14:0/12	Scan Class: A
			Off Label: Off	On Label: On				
PCU-2\PAH-3183_ACK	Digital	VALVE SOV-3183A/B FAILURE ACKNOWLEDGE	Alarmed: No	Security: *	Device Tag	Node Name: PCU-2	Address: N14:211/8	Scan Class: A
			Off Label: Off	On Label: On				
PCU-2\PAL-3100A	Digital	LOW COMPRESSOR SA-CMP-3101A PRESSURE	Alarmed: Yes	Security: *	Device Tag	Node Name: PCU-2	Address: N14:22/14	Scan Class: A
			Off Label: Off	On Label: On				
PCU-2\PAL-3100A_ACK	Digital	LOW COMPRESSOR SA-CMP-3101A PRESSURE ACKNOWLEDGE	Alarmed: No	Security: *	Device Tag	Node Name: PCU-2	Address: N14:211/9	Scan Class: A
			Off Label: Off	On Label: On				
PCU-2\PAL-3125A	Digital	BOOSTER PUMP LOW INLET PRESSURE Y-74.1	Alarmed: Yes	Security: *	Device Tag	Node Name: PCU-2	Address: N14:6/4	Scan Class: A
			Off Label: Off	On Label: On				
PCU-2\PAL-3125A1	Digital	PUMP P-3125A SEAL FAILURE [OFF = ALARM] Y76	Alarmed: Yes	Security: *	Device Tag	Node Name: PCU-2	Address: N14:22/15	Scan Class: A
			Off Label: Off	On Label: On				
PCU-2\PAL-3125A1_ACK	Digital	PUMP P-3125A SEAL FAILURE [OFF = ALARM] Y76 ACKNOWLEDGE	Alarmed: No	Security: *	Device Tag	Node Name: PCU-2	Address: N14:211/10	Scan Class: A
			Off Label: Off	On Label: On				
PCU-2\PAL-3125A2	Digital	PUMP P-3125A SEAL FAILURE [OFF = ALARM] Y76	Alarmed: Yes	Security: *	Device Tag	Node Name: PCU-2	Address: N14:22/11	Scan Class: A
			Off Label: Off	On Label: On				
PCU-2\PAL-3125A2_ACK	Digital	PUMP P-3125A SEAL FAILURE [OFF = ALARM] Y76 ACKNOWLEDGE	Alarmed: No	Security: *	Device Tag	Node Name: PCU-2	Address: N14:211/11	Scan Class: A
			Off Label: Off	On Label: On				

Tag Name	Tag Type	Description						
PCU-2\PAL-3125A_ACK	Digital	BOOSTER PUMP LOW INLET PRESSURE Y-74.1 ACKNOWLEDGE	Alarmed: No	Security: *	Device Tag	Node Name: PCU-2	Address: N14:216/15	Scan Class: A
			Off Label: Off	On Label: On				
PCU-2\PAL-3125B	Digital	BOOSTER PUMP LOW INLET PRESSURE Y-74.2	Alarmed: Yes	Security: *	Device Tag	Node Name: PCU-2	Address: N14:7/4	Scan Class: A
			Off Label: Off	On Label: On				
PCU-2\PAL-3125B1	Digital	PUMP P-3125B SEAL FAILURE [OFF = ALARM] Y76	Alarmed: Yes	Security: *	Device Tag	Node Name: PCU-2	Address: N14:22/12	Scan Class: A
			Off Label: Off	On Label: On				
PCU-2\PAL-3125B1_ACK	Digital	PUMP P-3125B SEAL FAILURE [OFF = ALARM] Y76 ACKNOWLEDGE	Alarmed: No	Security: *	Device Tag	Node Name: PCU-2	Address: N14:211/12	Scan Class: A
			Off Label: Off	On Label: On				
PCU-2\PAL-3125B2	Digital	PUMP P-3125B SEAL FAILURE [OFF = ALARM] Y76	Alarmed: Yes	Security: *	Device Tag	Node Name: PCU-2	Address: N14:22/13	Scan Class: A
			Off Label: Off	On Label: On				
PCU-2\PAL-3125B2_ACK	Digital	PUMP P-3125B SEAL FAILURE [OFF = ALARM] Y76 ACKNOWLEDGE	Alarmed: No	Security: *	Device Tag	Node Name: PCU-2	Address: N14:211/13	Scan Class: A
			Off Label: Off	On Label: On				
PCU-2\PAL-3125B_ACK	Digital	BOOSTER PUMP LOW INLET PRESSURE Y-74.2 ACKNOWLEDGE	Alarmed: No	Security: *	Device Tag	Node Name: PCU-2	Address: N14:217/0	Scan Class: A
			Off Label: Off	On Label: On				
PCU-2\PCU2-SP-AI-8	Analog	SPARE ANALOG INPUT	Alarmed: No	Security: *	Device Tag	Node Name: PCU-2	Address: N14:61	Scan Class: A
			Minimum : 0	Maximum : 32768	Scale : 1	Offset : 0	Units:	Data Type: Integer
PCU-2\PCU2-SP-AI-8_A	Digital	PCU-2 INPUT ANALOG OVER OR UNDER RANGE ALARM	Alarmed: No	Security: *	Device Tag	Node Name: PCU-2	Address: N14:14/15	Scan Class: A
			Off Label: Off	On Label: On				
PCU-2\PCU2-SP-AO-3	Analog	SPARE ANALOG OUTPUT	Alarmed: No	Security: *	Device Tag	Node Name: PCU-2	Address: N14:64	Scan Class: A
			Minimum : 0	Maximum : 32768	Scale : 1	Offset : 0	Units:	Data Type: Integer
PCU-2\PCU2-SP-AO-4	Analog	SPARE ANALOG OUTPUT	Alarmed: No	Security: *	Device Tag	Node Name: PCU-2	Address: N14:65	Scan Class: A
			Minimum : 0	Maximum : 32768	Scale : 1	Offset : 0	Units:	Data Type: Integer
PCU-2\PCU2-SP-I21-04	Digital	SPARE DIGITAL INPUT	Alarmed: No	Security: *	Device Tag	Node Name: PCU-2	Address: N14:17/4	Scan Class: A
			Off Label: Off	On Label: On				
PCU-2\PCU2-SP-I21-05	Digital	SPARE DIGITAL INPUT	Alarmed: No	Security: *	Device Tag	Node Name: PCU-2	Address: N14:17/5	Scan Class: A
			Off Label: Off	On Label: On				
PCU-2\PCU2-SP-I21-06	Digital	SPARE DIGITAL INPUT	Alarmed: No	Security: *	Device Tag	Node Name: PCU-2	Address: N14:17/6	Scan Class: A
			Off Label: Off	On Label: On				
PCU-2\PCU2-SP-I21-07	Digital	SPARE DIGITAL INPUT	Alarmed: No	Security: *	Device Tag	Node Name: PCU-2	Address: N14:17/7	Scan Class: A
			Off Label: Off	On Label: On				
PCU-2\PCU2-SP-I21-10	Digital	SPARE DIGITAL INPUT	Alarmed: No	Security: *	Device Tag	Node Name: PCU-2	Address: N14:17/8	Scan Class: A
			Off Label: Off	On Label: On				
PCU-2\PCU2-SP-I21-11	Digital	SPARE DIGITAL INPUT	Alarmed: No	Security: *	Device Tag	Node Name: PCU-2	Address: N14:17/9	Scan Class: A
			Off Label: Off	On Label: On				
PCU-2\PCU2-SP-I21-12	Digital	SPARE DIGITAL INPUT	Alarmed: No	Security: *	Device Tag	Node Name: PCU-2	Address: N14:17/10	Scan Class: A
			Off Label: Off	On Label: On				
PCU-2\PCU2-SP-I21-13	Digital	SPARE DIGITAL INPUT	Alarmed: No	Security: *	Device Tag	Node Name: PCU-2	Address: N14:17/11	Scan Class: A
			Off Label: Off	On Label: On				
PCU-2\PCU2-SP-I21-14	Digital	SPARE DIGITAL INPUT	Alarmed: No	Security: *	Device Tag	Node Name: PCU-2	Address: N14:17/12	Scan Class: A
			Off Label: Off	On Label: On				

Tag Name	Tag Type	Description						
PCU-2\PCU2-SP-I2 1-15	Digital	SPARE DIGITAL INPUT	Alarmed: No	Security: *	Device Tag	Node Name: PCU-2	Address: N14:17/13	Scan Class: A
			Off Label: Off	On Label: On				
PCU-2\PCU2-SP-I2 1-16	Digital	SPARE DIGITAL INPUT	Alarmed: No	Security: *	Device Tag	Node Name: PCU-2	Address: N14:17/14	Scan Class: A
			Off Label: Off	On Label: On				
PCU-2\PCU2-SP-I2 1-17	Digital	SPARE DIGITAL INPUT	Alarmed: No	Security: *	Device Tag	Node Name: PCU-2	Address: N14:17/15	Scan Class: A
			Off Label: Off	On Label: On				
PCU-2\PCU2-SP-I2 3-14	Digital	SPARE DIGITAL INPUT	Alarmed: No	Security: *	Device Tag	Node Name: PCU-2	Address: N14:19/12	Scan Class: A
			Off Label: Off	On Label: On				
PCU-2\PCU2-SP-I2 3-15	Digital	SPARE DIGITAL INPUT	Alarmed: No	Security: *	Device Tag	Node Name: PCU-2	Address: N14:19/13	Scan Class: A
			Off Label: Off	On Label: On				
PCU-2\PCU2-SP-I2 3-16	Digital	SPARE DIGITAL INPUT	Alarmed: No	Security: *	Device Tag	Node Name: PCU-2	Address: N14:19/14	Scan Class: A
			Off Label: Off	On Label: On				
PCU-2\PCU2-SP-I2 3-17	Digital	SPARE DIGITAL INPUT	Alarmed: No	Security: *	Device Tag	Node Name: PCU-2	Address: N14:19/15	Scan Class: A
			Off Label: Off	On Label: On				
PCU-2\PCU2-SP-O 35-15	Digital	SPARE DIGITAL OUTPUT	Alarmed: No	Security: *	Device Tag	Node Name: PCU-2	Address: N14:27/13	Scan Class: A
			Off Label: Off	On Label: On				
PCU-2\PCU2-SP-O 35-16	Digital	SPARE DIGITAL OUTPUT	Alarmed: No	Security: *	Device Tag	Node Name: PCU-2	Address: N14:27/14	Scan Class: A
			Off Label: Off	On Label: On				
PCU-2\PCU2-SP-O 35-17	Digital	SPARE DIGITAL OUTPUT	Alarmed: No	Security: *	Device Tag	Node Name: PCU-2	Address: N14:27/15	Scan Class: A
			Off Label: Off	On Label: On				
PCU-2\PCU2-SP-O 37-14	Digital	SPARE DIGITAL OUTPUT	Alarmed: No	Security: *	Device Tag	Node Name: PCU-2	Address: N14:29/12	Scan Class: A
			Off Label: Off	On Label: On				
PCU-2\PCU2-SP-O 37-15	Digital	SPARE DIGITAL OUTPUT	Alarmed: No	Security: *	Device Tag	Node Name: PCU-2	Address: N14:29/13	Scan Class: A
			Off Label: Off	On Label: On				
PCU-2\PCU2-SP-O 37-16	Digital	SPARE DIGITAL OUTPUT	Alarmed: No	Security: *	Device Tag	Node Name: PCU-2	Address: N14:29/14	Scan Class: A
			Off Label: Off	On Label: On				
PCU-2\PCU2-SP-O 37-17	Digital	SPARE DIGITAL OUTPUT	Alarmed: No	Security: *	Device Tag	Node Name: PCU-2	Address: N14:29/15	Scan Class: A
			Off Label: Off	On Label: On				
PCU-2\PCU2-SP-RI -5	Analog	SPARE R.T.D. TEMP. INPUT	Alarmed: No	Security: *	Device Tag	Node Name: PCU-2	Address: N14:34	Scan Class: A
			Minimum : 0	Maximum : 32768	Scale : 1	Offset : 0	Units:	Data Type: Integer
PCU-2\PCU2-SP-RI -5_A	Digital	PCU-2 INPUT R.T.D. TEMP. OVER OR UNDER RANGE ALARM	Alarmed: No	Security: *	Device Tag	Node Name: PCU-2	Address: N14:11/4	Scan Class: A
			Off Label: Off	On Label: On				
PCU-2\PCU2-SP-RI -6	Analog	SPARE R.T.D. TEMP. INPUT	Alarmed: No	Security: *	Device Tag	Node Name: PCU-2	Address: N14:35	Scan Class: A
			Minimum : 0	Maximum : 32768	Scale : 1	Offset : 0	Units:	Data Type: Integer
PCU-2\PCU2-SP-RI -6_A	Digital	PCU-2 INPUT R.T.D. TEMP. OVER OR UNDER RANGE ALARM	Alarmed: No	Security: *	Device Tag	Node Name: PCU-2	Address: N14:11/5	Scan Class: A
			Off Label: Off	On Label: On				
PCU-2\PCU2-SP-RI -7	Analog	SPARE R.T.D. TEMP. INPUT	Alarmed: No	Security: *	Device Tag	Node Name: PCU-2	Address: N14:36	Scan Class: A
			Minimum : 0	Maximum : 32768	Scale : 1	Offset : 0	Units:	Data Type: Integer
PCU-2\PCU2-SP-RI -7_A	Digital	PCU-2 INPUT R.T.D. TEMP. OVER OR UNDER RANGE ALARM	Alarmed: No	Security: *	Device Tag	Node Name: PCU-2	Address: N14:11/6	Scan Class: A
			Off Label: Off	On Label: On				
PCU-2\PCU2-SP-RI -8	Analog	SPARE R.T.D. TEMP. INPUT	Alarmed: No	Security: *	Device Tag	Node Name: PCU-2	Address: N14:37	Scan Class: A
			Minimum : 0	Maximum : 32768	Scale : 1	Offset : 0	Units:	Data Type: Integer
PCU-2\PCU2-SP-RI -8_A	Digital	PCU-2 INPUT R.T.D. TEMP. OVER OR UNDER RANGE ALARM	Alarmed: No	Security: *	Device Tag	Node Name: PCU-2	Address: N14:11/7	Scan Class: A
			Off Label: Off	On Label: On				
PCU-2\PCU2-SP-TI -2	Analog	SPARE THERMOCOUPLE INPUT	Alarmed: No	Security: *	Device Tag	Node Name: PCU-2	Address: N14:39	Scan Class: A
			Minimum : 0	Maximum : 32768	Scale : 1	Offset : 0	Units:	Data Type: Integer

Tag Name	Tag Type	Description						
PCU-2\PCU2-SP-TI-2_A	Digital	PCU-2 INPUT THERMOCOUPLE OVER OR UNDER RANGE ALARM	Alarmed: No	Security: *	Device Tag	Node Name: PCU-2	Address: N14:12/9	Scan Class: A
			Off Label: Off	On Label: On				
PCU-2\PCU2-SP-TI-4	Analog	SPARE THERMOCOUPLE INPUT	Alarmed: No	Security: *	Device Tag	Node Name: PCU-2	Address: N14:41	Scan Class: A
			Minimum : 0	Maximum : 32768	Scale : 1	Offset : 0	Units:	Data Type: Integer
PCU-2\PCU2-SP-TI-4_A	Digital	PCU-2 INPUT THERMOCOUPLE OVER OR UNDER RANGE ALARM	Alarmed: No	Security: *	Device Tag	Node Name: PCU-2	Address: N14:12/11	Scan Class: A
			Off Label: Off	On Label: On				
PCU-2\PCU2-SP-TI-5	Analog	SPARE THERMOCOUPLE INPUT	Alarmed: No	Security: *	Device Tag	Node Name: PCU-2	Address: N14:42	Scan Class: A
			Minimum : 0	Maximum : 32768	Scale : 1	Offset : 0	Units:	Data Type: Integer
PCU-2\PCU2-SP-TI-5_A	Digital	PCU-2 INPUT THERMOCOUPLE OVER OR UNDER RANGE ALARM	Alarmed: No	Security: *	Device Tag	Node Name: PCU-2	Address: N14:12/12	Scan Class: A
			Off Label: Off	On Label: On				
PCU-2\PCU2-SP-TI-6	Analog	SPARE THERMOCOUPLE INPUT	Alarmed: No	Security: *	Device Tag	Node Name: PCU-2	Address: N14:43	Scan Class: A
			Minimum : 0	Maximum : 32768	Scale : 1	Offset : 0	Units:	Data Type: Integer
PCU-2\PCU2-SP-TI-6_A	Digital	PCU-2 INPUT THERMOCOUPLE OVER OR UNDER RANGE ALARM	Alarmed: No	Security: *	Device Tag	Node Name: PCU-2	Address: N14:12/13	Scan Class: A
			Off Label: Off	On Label: On				
PCU-2\PCU2-SP-TI-7	Analog	SPARE THERMOCOUPLE INPUT	Alarmed: No	Security: *	Device Tag	Node Name: PCU-2	Address: N14:44	Scan Class: A
			Minimum : 0	Maximum : 32768	Scale : 1	Offset : 0	Units:	Data Type: Integer
PCU-2\PCU2-SP-TI-7_A	Digital	PCU-2 INPUT THERMOCOUPLE OVER OR UNDER RANGE ALARM	Alarmed: No	Security: *	Device Tag	Node Name: PCU-2	Address: N14:12/14	Scan Class: A
			Off Label: Off	On Label: On				
PCU-2\PCU2-SP-TI-8	Analog	SPARE THERMOCOUPLE INPUT	Alarmed: No	Security: *	Device Tag	Node Name: PCU-2	Address: N14:45	Scan Class: A
			Minimum : 0	Maximum : 32768	Scale : 1	Offset : 0	Units:	Data Type: Integer
PCU-2\PCU2-SP-TI-8_A	Digital	PCU-2 INPUT THERMOCOUPLE OVER OR UNDER RANGE ALARM	Alarmed: No	Security: *	Device Tag	Node Name: PCU-2	Address: N14:12/15	Scan Class: A
			Off Label: Off	On Label: On				
PCU-2\PI-3125A	Analog	PUMP P-3125A INLET PRESSURE	Alarmed: No	Security: *	Device Tag	Node Name: PCU-2	Address: N14:47	Scan Class: A
			Minimum : 0	Maximum : 100	Scale : 1	Offset : 0	Units: PSIG	Data Type: Integer
PCU-2\PI-3125A_A	Digital	PCU-2 INPUT ANALOG OVER OR UNDER RANGE ALARM	Alarmed: Yes	Security: *	Device Tag	Node Name: PCU-2	Address: N14:13/1	Scan Class: A
			Off Label: Off	On Label: On				
PCU-2\PI-3125A_A_ACK	Digital	PCU-2 INPUT ANALOG OVER OR UNDER RANGE ALARM ACKNOWLEDGE	Alarmed: No	Security: *	Device Tag	Node Name: PCU-2	Address: N14:211/14	Scan Class: A
			Off Label: Off	On Label: On				
PCU-2\PI-3125B	Analog	PUMP P-3125B INLET PRESSURE	Alarmed: No	Security: *	Device Tag	Node Name: PCU-2	Address: N14:48	Scan Class: A
			Minimum : 0	Maximum : 100	Scale : 1	Offset : 0	Units: PSIG	Data Type: Integer
PCU-2\PI-3125B_A	Digital	PCU-2 INPUT ANALOG OVER OR UNDER RANGE ALARM	Alarmed: Yes	Security: *	Device Tag	Node Name: PCU-2	Address: N14:13/2	Scan Class: A
			Off Label: Off	On Label: On				
PCU-2\PI-3125B_A_ACK	Digital	PCU-2 INPUT ANALOG OVER OR UNDER RANGE ALARM ACKNOWLEDGE	Alarmed: No	Security: *	Device Tag	Node Name: PCU-2	Address: N14:211/15	Scan Class: A
			Off Label: Off	On Label: On				

Tag Name	Tag Type	Description						
PCU-2\PI-3125C	Analog	PUMP P-3125A OUTLET PRESSURE	Alarmed: No	Security: *	Device Tag	Node Name: PCU-2	Address: N14:49	Scan Class: A
			Minimum : 0	Maximum : 3000	Scale : 1	Offset : 0	Units: PSIG	Data Type: Integer
PCU-2\PI-3125C_A	Digital	PCU-2 INPUT ANALOG OVER OR UNDER RANGE ALARM	Alarmed: Yes	Security: *	Device Tag	Node Name: PCU-2	Address: N14:13/3	Scan Class: A
			Off Label: Off	On Label: On				
PCU-2\PI-3125C_A_ACK	Digital	PCU-2 INPUT ANALOG OVER OR UNDER RANGE ALARM ACKNOWLEDGE	Alarmed: No	Security: *	Device Tag	Node Name: PCU-2	Address: N14:212/0	Scan Class: A
			Off Label: Off	On Label: On				
PCU-2\PI-3125D	Analog	PUMP P-3125B OUTLET PRESSURE	Alarmed: No	Security: *	Device Tag	Node Name: PCU-2	Address: N14:50	Scan Class: A
			Minimum : 0	Maximum : 3000	Scale : 1	Offset : 0	Units: PSIG	Data Type: Integer
PCU-2\PI-3125D_A	Digital	PCU-2 INPUT ANALOG OVER OR UNDER RANGE ALARM	Alarmed: Yes	Security: *	Device Tag	Node Name: PCU-2	Address: N14:13/4	Scan Class: A
			Off Label: Off	On Label: On				
PCU-2\PI-3125D_A_ACK	Digital	PCU-2 INPUT ANALOG OVER OR UNDER RANGE ALARM ACKNOWLEDGE	Alarmed: No	Security: *	Device Tag	Node Name: PCU-2	Address: N14:212/1	Scan Class: A
			Off Label: Off	On Label: On				
PCU-2\PI-3125E	Analog	LINE WT-SNL-3150 PRESSURE	Alarmed: No	Security: *	Device Tag	Node Name: PCU-2	Address: N14:51	Scan Class: A
			Minimum : 0	Maximum : 300	Scale : 1	Offset : 0	Units: PSIG	Data Type: Integer
PCU-2\PI-3125E_A	Digital	PCU-2 INPUT ANALOG OVER OR UNDER RANGE ALARM	Alarmed: Yes	Security: *	Device Tag	Node Name: PCU-2	Address: N14:13/5	Scan Class: A
			Off Label: Off	On Label: On				
PCU-2\PI-3125E_A_ACK	Digital	PCU-2 INPUT ANALOG OVER OR UNDER RANGE ALARM ACKNOWLEDGE	Alarmed: No	Security: *	Device Tag	Node Name: PCU-2	Address: N14:212/2	Scan Class: A
			Off Label: Off	On Label: On				
PCU-2\PI-3173	Analog	VALVE SOV-3173A/B PRESSURE	Alarmed: No	Security: *	Device Tag	Node Name: PCU-2	Address: N14:58	Scan Class: A
			Minimum : 0	Maximum : 1000	Scale : 1	Offset : 0	Units: PSIG	Data Type: Integer
PCU-2\PI-3173_A	Digital	PCU-2 INPUT ANALOG OVER OR UNDER RANGE ALARM	Alarmed: Yes	Security: *	Device Tag	Node Name: PCU-2	Address: N14:14/12	Scan Class: A
			Off Label: Off	On Label: On				
PCU-2\PI-3173_A_ACK	Digital	PCU-2 INPUT ANALOG OVER OR UNDER RANGE ALARM ACKNOWLEDGE	Alarmed: No	Security: *	Device Tag	Node Name: PCU-2	Address: N14:212/3	Scan Class: A
			Off Label: Off	On Label: On				
PCU-2\PI-3182	Analog	VALVE SOV-3182A/B PRESSURE	Alarmed: No	Security: *	Device Tag	Node Name: PCU-2	Address: N14:59	Scan Class: A
			Minimum : 0	Maximum : 300	Scale : 1	Offset : 0	Units: PSIG	Data Type: Integer
PCU-2\PI-3182_A	Digital	PCU-2 INPUT ANALOG OVER OR UNDER RANGE ALARM	Alarmed: Yes	Security: *	Device Tag	Node Name: PCU-2	Address: N14:14/13	Scan Class: A
			Off Label: Off	On Label: On				
PCU-2\PI-3182_A_ACK	Digital	PCU-2 INPUT ANALOG OVER OR UNDER RANGE ALARM ACKNOWLEDGE	Alarmed: No	Security: *	Device Tag	Node Name: PCU-2	Address: N14:212/4	Scan Class: A
			Off Label: Off	On Label: On				
PCU-2\PI-3183	Analog	VALVE SOV-3183A/B PRESSURE	Alarmed: No	Security: *	Device Tag	Node Name: PCU-2	Address: N14:60	Scan Class: A
			Minimum : 0	Maximum : 100	Scale : 1	Offset : 0	Units: PSIG	Data Type: Integer

Tag Name	Tag Type	Description						
PCU-2\PI-3183_A	Digital	PCU-2 INPUT ANALOG OVER OR UNDER RANGE ALARM	Alarmed: Yes	Security: *	Device Tag	Node Name: PCU-2	Address: N14:14/14	Scan Class: A
			Off Label: Off	On Label: On				
PCU-2\PI-3183_A_ACK	Digital	PCU-2 INPUT ANALOG OVER OR UNDER RANGE ALARM ACKNOWLEDGE	Alarmed: No	Security: *	Device Tag	Node Name: PCU-2	Address: N14:212/5	Scan Class: A
			Off Label: Off	On Label: On				
PCU-2\PID-3125-FR	Analog	PUMP P-3125 A/B OUTLET FLOW REFERENCE FROM OIT	Alarmed: No	Security: *	Device Tag	Node Name: PCU-2	Address: N14:140	Scan Class: A
			Minimum : 0	Maximum : 240	Scale : 1	Offset : 0	Units:	Data Type: Integer
PCU-2\PID-3125-KD	Analog	PUMP P-3125 A/B PID CONTROL DERIV. GAIN FROM OIT	Alarmed: No	Security: *	Device Tag	Node Name: PCU-2	Address: N14:143	Scan Class: A
			Minimum : 0	Maximum : 3000	Scale : 1	Offset : 0	Units:	Data Type: Integer
PCU-2\PID-3125-KI	Analog	PUMP P-3125 A/B PID CONTROL INTEG. GAIN FROM OIT	Alarmed: No	Security: *	Device Tag	Node Name: PCU-2	Address: N14:142	Scan Class: A
			Minimum : 0	Maximum : 3000	Scale : 1	Offset : 0	Units:	Data Type: Integer
PCU-2\PID-3125-KP	Analog	PUMP P-3125 A/B PID CONTROL PROP. GAIN FROM OIT	Alarmed: No	Security: *	Device Tag	Node Name: PCU-2	Address: N14:141	Scan Class: A
			Minimum : 0	Maximum : 3000	Scale : 1	Offset : 0	Units:	Data Type: Integer
PCU-2\SI-3125A	Analog	MOTOR SPEED PUMP P-3125A	Alarmed: No	Security: *	Device Tag	Node Name: PCU-2	Address: N14:52	Scan Class: A
			Minimum : 0	Maximum : 3600	Scale : 1	Offset : 0	Units: DEG F.	Data Type: Integer
PCU-2\SI-3125A_A	Digital	PCU-2 INPUT ANALOG OVER OR UNDER RANGE ALARM	Alarmed: Yes	Security: *	Device Tag	Node Name: PCU-2	Address: N14:13/6	Scan Class: A
			Off Label: Off	On Label: On				
PCU-2\SI-3125A_A_ACK	Digital	PCU-2 INPUT ANALOG OVER OR UNDER RANGE ALARM ACKNOWLEDGE	Alarmed: No	Security: *	Device Tag	Node Name: PCU-2	Address: N14:212/6	Scan Class: A
			Off Label: Off	On Label: On				
PCU-2\SI-3125B	Analog	MOTOR SPEED PUMP P-3125B	Alarmed: No	Security: *	Device Tag	Node Name: PCU-2	Address: N14:53	Scan Class: A
			Minimum : 0	Maximum : 3600	Scale : 1	Offset : 0	Units: DEG F.	Data Type: Integer
PCU-2\SI-3125B_A	Digital	PCU-2 INPUT ANALOG OVER OR UNDER RANGE ALARM	Alarmed: Yes	Security: *	Device Tag	Node Name: PCU-2	Address: N14:13/7	Scan Class: A
			Off Label: Off	On Label: On				
PCU-2\SI-3125B_A_ACK	Digital	PCU-2 INPUT ANALOG OVER OR UNDER RANGE ALARM ACKNOWLEDGE	Alarmed: No	Security: *	Device Tag	Node Name: PCU-2	Address: N14:212/7	Scan Class: A
			Off Label: Off	On Label: On				
PCU-2\SOV-3125C1	Digital	OPEN VALVE SOV-3125C Y-84	Alarmed: No	Security: *	Device Tag	Node Name: PCU-2	Address: N14:28/0	Scan Class: A
			Off Label: Off	On Label: On				
PCU-2\SOV-3125C2	Digital	CLOSE VALVE SOV-3125C Y-84	Alarmed: No	Security: *	Device Tag	Node Name: PCU-2	Address: N14:28/1	Scan Class: A
			Off Label: Off	On Label: On				
PCU-2\SOV-3125D1	Digital	OPEN VALVE SOV-3125D Y-86	Alarmed: No	Security: *	Device Tag	Node Name: PCU-2	Address: N14:28/2	Scan Class: A
			Off Label: Off	On Label: On				
PCU-2\SOV-3125D2	Digital	CLOSE VALVE SOV-3125D Y-86	Alarmed: No	Security: *	Device Tag	Node Name: PCU-2	Address: N14:28/3	Scan Class: A
			Off Label: Off	On Label: On				
PCU-2\SOV-3125E1	Digital	OPEN VALVE SOV-3125E Y-83	Alarmed: No	Security: *	Device Tag	Node Name: PCU-2	Address: N14:28/4	Scan Class: A
			Off Label: Off	On Label: On				
PCU-2\SOV-3125E2	Digital	CLOSE VALVE SOV-3125E Y-83	Alarmed: No	Security: *	Device Tag	Node Name: PCU-2	Address: N14:28/5	Scan Class: A
			Off Label: Off	On Label: On				
PCU-2\SOV-3125G1	Digital	OPEN VALVE SOV-3125G Y-85	Alarmed: No	Security: *	Device Tag	Node Name: PCU-2	Address: N14:28/6	Scan Class: A
			Off Label: Off	On Label: On				

Tag Name	Tag Type	Description						
PCU-2\SOV-3125G 2	Digital	CLOSE VALVE SOV-3125G Y-85	Alarmed: No	Security: *	Device Tag	Node Name: PCU-2	Address: N14:28/7	Scan Class: A
			Off Label: Off	On Label: On				
PCU-2\SOV-3163-1	Digital	OPEN VALVE SOV-3163 Y80-2	Alarmed: No	Security: *	Device Tag	Node Name: PCU-2	Address: N14:28/12	Scan Class: A
			Off Label: Off	On Label: On				
PCU-2\SOV-3163-2	Digital	CLOSE VALVE SOV-3163 Y80-2	Alarmed: No	Security: *	Device Tag	Node Name: PCU-2	Address: N14:28/13	Scan Class: A
			Off Label: Off	On Label: On				
PCU-2\SOV-3173A 1	Digital	OPEN VALVE SOV-3173A Y87-1	Alarmed: No	Security: *	Device Tag	Node Name: PCU-2	Address: N14:28/14	Scan Class: A
			Off Label: Off	On Label: On				
PCU-2\SOV-3173A 2	Digital	CLOSE VALVE SOV-3173A Y87-1	Alarmed: No	Security: *	Device Tag	Node Name: PCU-2	Address: N14:28/15	Scan Class: A
			Off Label: Off	On Label: On				
PCU-2\SOV-3173B 1	Digital	OPEN VALVE SOV-3173B Y87-2	Alarmed: No	Security: *	Device Tag	Node Name: PCU-2	Address: N14:29/0	Scan Class: A
			Off Label: Off	On Label: On				
PCU-2\SOV-3173B 2	Digital	CLOSE VALVE SOV-3173B Y87-2	Alarmed: No	Security: *	Device Tag	Node Name: PCU-2	Address: N14:29/1	Scan Class: A
			Off Label: Off	On Label: On				
PCU-2\SOV-3182A 1	Digital	OPEN VALVE SOV-3182A Y71	Alarmed: No	Security: *	Device Tag	Node Name: PCU-2	Address: N14:29/2	Scan Class: A
			Off Label: Off	On Label: On				
PCU-2\SOV-3182A 2	Digital	CLOSE VALVE SOV-3182A Y71	Alarmed: No	Security: *	Device Tag	Node Name: PCU-2	Address: N14:29/3	Scan Class: A
			Off Label: Off	On Label: On				
PCU-2\SOV-3182B 1	Digital	OPEN VALVE SOV-3182B Y71	Alarmed: No	Security: *	Device Tag	Node Name: PCU-2	Address: N14:29/4	Scan Class: A
			Off Label: Off	On Label: On				
PCU-2\SOV-3182B 2	Digital	CLOSE VALVE SOV-3182B Y71	Alarmed: No	Security: *	Device Tag	Node Name: PCU-2	Address: N14:29/5	Scan Class: A
			Off Label: Off	On Label: On				
PCU-2\SOV-3183A 1	Digital	OPEN VALVE SOV-3183A Y71	Alarmed: No	Security: *	Device Tag	Node Name: PCU-2	Address: N14:29/6	Scan Class: A
			Off Label: Off	On Label: On				
PCU-2\SOV-3183A 2	Digital	CLOSE VALVE SOV-3183A Y71	Alarmed: No	Security: *	Device Tag	Node Name: PCU-2	Address: N14:29/7	Scan Class: A
			Off Label: Off	On Label: On				
PCU-2\SOV-3183B 1	Digital	OPEN VALVE SOV-3183B Y71	Alarmed: No	Security: *	Device Tag	Node Name: PCU-2	Address: N14:29/8	Scan Class: A
			Off Label: Off	On Label: On				
PCU-2\SOV-3183B 2	Digital	CLOSE VALVE SOV-3183B Y71	Alarmed: No	Security: *	Device Tag	Node Name: PCU-2	Address: N14:29/9	Scan Class: A
			Off Label: Off	On Label: On				
PCU-2\SOV-3184-1	Digital	OPEN VALVE SOV-3184 Y71	Alarmed: No	Security: *	Device Tag	Node Name: PCU-2	Address: N14:29/10	Scan Class: A
			Off Label: Off	On Label: On				
PCU-2\SOV-3184-2	Digital	CLOSE VALVE SOV-3184 Y71	Alarmed: No	Security: *	Device Tag	Node Name: PCU-2	Address: N14:29/11	Scan Class: A
			Off Label: Off	On Label: On				
PCU-2\TAH-3125A	Digital	PUMP P-3125A MOTOR WINDING TEMP. HIGH [OFF = ALARM] Y76	Alarmed: Yes	Security: *	Device Tag	Node Name: PCU-2	Address: N14:21/14	Scan Class: A
			Off Label: Off	On Label: On				
PCU-2\TAH-3125A 1	Digital	PUMP P-3125A INBOARD BEARING HIGH TEMP. Y-76.1	Alarmed: Yes	Security: *	Device Tag	Node Name: PCU-2	Address: N14:6/0	Scan Class: A
			Off Label: Off	On Label: On				
PCU-2\TAH-3125A 1_ACK	Digital	PUMP P-3125A INBOARD BEARING HIGH TEMP. Y-76.1 ACKNOWLEDGE	Alarmed: No	Security: *	Device Tag	Node Name: PCU-2	Address: N14:212/8	Scan Class: A
			Off Label: Off	On Label: On				
PCU-2\TAH-3125A 2	Digital	PUMP P-3125A OUTBOARD BEARING HIGH TEMP. Y-76.1	Alarmed: Yes	Security: *	Device Tag	Node Name: PCU-2	Address: N14:6/1	Scan Class: A
			Off Label: Off	On Label: On				
PCU-2\TAH-3125A 2_ACK	Digital	PUMP P-3125A OUTBOARD BEARING HIGH TEMP. Y-76.1 ACKNOWLEDGE	Alarmed: No	Security: *	Device Tag	Node Name: PCU-2	Address: N14:212/9	Scan Class: A
			Off Label: Off	On Label: On				

Tag Name	Tag Type	Description						
PCU-2\TAH-3125A_ACK	Digital	PUMP P-3125A MOTOR WINDING TEMP. HIGH [OFF = ALARM] Y76 ACKNOWLEDGE	Alarmed: No	Security: *	Device Tag	Node Name: PCU-2	Address: N14:212/10	Scan Class: A
			Off Label: Off	On Label: On				
PCU-2\TAH-3125B	Digital	PUMP P-3125B MOTOR WINDING TEMP. HIGH [OFF = ALARM] Y76	Alarmed: Yes	Security: *	Device Tag	Node Name: PCU-2	Address: N14:21/15	Scan Class: A
			Off Label: Off	On Label: On				
PCU-2\TAH-3125B1	Digital	PUMP P-3125B INBOARD BEARING HIGH TEMP. Y-76.1	Alarmed: Yes	Security: *	Device Tag	Node Name: PCU-2	Address: N14:7/0	Scan Class: A
			Off Label: Off	On Label: On				
PCU-2\TAH-3125B1_ACK	Digital	PUMP P-3125B INBOARD BEARING HIGH TEMP. Y-76.1 ACKNOWLEDGE	Alarmed: No	Security: *	Device Tag	Node Name: PCU-2	Address: N14:212/11	Scan Class: A
			Off Label: Off	On Label: On				
PCU-2\TAH-3125B2	Digital	PUMP P-3125B OUTBOARD BEARING HIGH TEMP. Y-76.1	Alarmed: Yes	Security: *	Device Tag	Node Name: PCU-2	Address: N14:7/1	Scan Class: A
			Off Label: Off	On Label: On				
PCU-2\TAH-3125B2_ACK	Digital	PUMP P-3125B OUTBOARD BEARING HIGH TEMP. Y-76.1 ACKNOWLEDGE	Alarmed: No	Security: *	Device Tag	Node Name: PCU-2	Address: N14:212/12	Scan Class: A
			Off Label: Off	On Label: On				
PCU-2\TAH-3125B_ACK	Digital	PUMP P-3125B MOTOR WINDING TEMP. HIGH [OFF = ALARM] Y76 ACKNOWLEDGE	Alarmed: No	Security: *	Device Tag	Node Name: PCU-2	Address: N14:212/13	Scan Class: A
			Off Label: Off	On Label: On				
PCU-2\TAH_CAB_PLC2	Digital	PLC-2 CABINET HIGH TEMPERATURE [OFF = ALARM]	Alarmed: Yes	Security: *	Device Tag	Node Name: PCU-2	Address: N14:17/4	Scan Class: A
			Off Label: Off	On Label: On				
PCU-2\TAH_CAB_PLC2_ACK	Digital	PLC-2 CABINET HIGH TEMPERATURE ACKNOWLEDGE	Alarmed: No	Security: *	Device Tag	Node Name: PCU-2	Address: N14:217/1	Scan Class: A
			Off Label: Off	On Label: On				
PCU-2\TI-3125A	Analog	PUMP P-3125A/B OUTLET FLOW TEMPERATURE WT-SLL-3160	Alarmed: No	Security: *	Device Tag	Node Name: PCU-2	Address: N14:38	Scan Class: A
			Minimum : 35	Maximum : 200	Scale : 1	Offset : 0	Units: DEG F	Data Type: Integer
PCU-2\TI-3125A1	Analog	PUMP P-3125A MOTOR BEARING TEMPERATURE	Alarmed: No	Security: *	Device Tag	Node Name: PCU-2	Address: N14:32	Scan Class: A
			Minimum : 0	Maximum : 100	Scale : 1	Offset : 0	Units: DEG F	Data Type: Integer
PCU-2\TI-3125A1_A	Digital	PCU-2 INPUT R.T.D. TEMP. OVER OR UNDER RANGE ALARM	Alarmed: Yes	Security: *	Device Tag	Node Name: PCU-2	Address: N14:11/2	Scan Class: A
			Off Label: Off	On Label: On				
PCU-2\TI-3125A1_A_ACK	Digital	PCU-2 INPUT R.T.D. TEMP. OVER OR UNDER RANGE ALARM ACKNOWLEDGE	Alarmed: No	Security: *	Device Tag	Node Name: PCU-2	Address: N14:212/14	Scan Class: A
			Off Label: Off	On Label: On				
PCU-2\TI-3125A2	Analog	PUMP P-3125A MOTOR BEARING TEMPERATURE	Alarmed: No	Security: *	Device Tag	Node Name: PCU-2	Address: N14:33	Scan Class: A
			Minimum : 0	Maximum : 100	Scale : 1	Offset : 0	Units: DEG F	Data Type: Integer
PCU-2\TI-3125A2_A	Digital	PCU-2 INPUT R.T.D. TEMP. OVER OR UNDER RANGE ALARM	Alarmed: Yes	Security: *	Device Tag	Node Name: PCU-2	Address: N14:11/3	Scan Class: A
			Off Label: Off	On Label: On				

Tag Name	Tag Type	Description						
PCU-2\TI-3125A2_A_ACK	Digital	PCU-2 INPUT R.T.D. TEMP. OVER OR UNDER RANGE ALARM ACKNOWLEDGE	Alarmed: No	Security: *	Device Tag	Node Name: PCU-2	Address: N14:212/15	Scan Class: A
			Off Label: Off	On Label: On				
PCU-2\TI-3125A_A	Digital	PCU-2 INPUT THERMOCOUPLE OVER OR UNDER RANGE ALARM	Alarmed: Yes	Security: *	Device Tag	Node Name: PCU-2	Address: N14:12/8	Scan Class: A
			Off Label: Off	On Label: On				
PCU-2\TI-3125A_A_ACK	Digital	PCU-2 INPUT THERMOCOUPLE OVER OR UNDER RANGE ALARM ACKNOWLEDGE	Alarmed: No	Security: *	Device Tag	Node Name: PCU-2	Address: N14:213/0	Scan Class: A
			Off Label: Off	On Label: On				
PCU-2\TI-3125B	Analog	LINE WT-SNL-3150 TEMPERATURE	Alarmed: No	Security: *	Device Tag	Node Name: PCU-2	Address: N14:40	Scan Class: A
			Minimum : 35	Maximum : 200	Scale : 1	Offset : 0	Units: DEG F	Data Type: Integer
PCU-2\TI-3125B1	Analog	PUMP P-3125B MOTOR BEARING TEMPERATURE	Alarmed: No	Security: *	Device Tag	Node Name: PCU-2	Address: N14:30	Scan Class: A
			Minimum : 0	Maximum : 100	Scale : 1	Offset : 0	Units: DEG F	Data Type: Integer
PCU-2\TI-3125B1_A	Digital	PCU-2 INPUT R.T.D. TEMP. OVER OR UNDER RANGE ALARM	Alarmed: Yes	Security: *	Device Tag	Node Name: PCU-2	Address: N14:11/0	Scan Class: A
			Off Label: Off	On Label: On				
PCU-2\TI-3125B1_A_ACK	Digital	PCU-2 INPUT R.T.D. TEMP. OVER OR UNDER RANGE ALARM ACKNOWLEDGE	Alarmed: No	Security: *	Device Tag	Node Name: PCU-2	Address: N14:213/1	Scan Class: A
			Off Label: Off	On Label: On				
PCU-2\TI-3125B2	Analog	PUMP P-3125B MOTOR BEARING TEMPERATURE	Alarmed: No	Security: *	Device Tag	Node Name: PCU-2	Address: N14:31	Scan Class: A
			Minimum : 0	Maximum : 100	Scale : 1	Offset : 0	Units: DEG F	Data Type: Integer
PCU-2\TI-3125B2_A	Digital	PCU-2 INPUT R.T.D. TEMP. OVER OR UNDER RANGE ALARM	Alarmed: Yes	Security: *	Device Tag	Node Name: PCU-2	Address: N14:11/1	Scan Class: A
			Off Label: Off	On Label: On				
PCU-2\TI-3125B2_A_ACK	Digital	PCU-2 INPUT R.T.D. TEMP. OVER OR UNDER RANGE ALARM ACKNOWLEDGE	Alarmed: No	Security: *	Device Tag	Node Name: PCU-2	Address: N14:213/2	Scan Class: A
			Off Label: Off	On Label: On				
PCU-2\TI-3125B_A	Digital	PCU-2 INPUT THERMOCOUPLE OVER OR UNDER RANGE ALARM	Alarmed: Yes	Security: *	Device Tag	Node Name: PCU-2	Address: N14:12/10	Scan Class: A
			Off Label: Off	On Label: On				
PCU-2\TI-3125B_A_ACK	Digital	PCU-2 INPUT THERMOCOUPLE OVER OR UNDER RANGE ALARM ACKNOWLEDGE	Alarmed: No	Security: *	Device Tag	Node Name: PCU-2	Address: N14:213/3	Scan Class: A
			Off Label: Off	On Label: On				
PCU-2\VAH-3125A1	Digital	PUMP P-3125A HIGH MOTOR VIBRATION Y-76.1	Alarmed: Yes	Security: *	Device Tag	Node Name: PCU-2	Address: N14:6/6	Scan Class: A
			Off Label: Off	On Label: On				
PCU-2\VAH-3125A1_ACK	Digital	PUMP P-3125A HIGH MOTOR VIBRATION Y-76.1 ACKNOWLEDGE	Alarmed: No	Security: *	Device Tag	Node Name: PCU-2	Address: N14:213/4	Scan Class: A
			Off Label: Off	On Label: On				
PCU-2\VAH-3125A2	Digital	PUMP P-3125A HIGH MOTOR VIBRATION Y-76.1	Alarmed: Yes	Security: *	Device Tag	Node Name: PCU-2	Address: N14:6/7	Scan Class: A
			Off Label: Off	On Label: On				
PCU-2\VAH-3125A2_ACK	Digital	PUMP P-3125A HIGH MOTOR VIBRATION Y-76.1 ACKNOWLEDGE	Alarmed: No	Security: *	Device Tag	Node Name: PCU-2	Address: N14:213/5	Scan Class: A
			Off Label: Off	On Label: On				

Tag Name	Tag Type	Description						
PCU-2\VAH-3125B 1	Digital	PUMP P-3125B HIGH MOTOR VIBRATION Y-76.1	Alarmed: Yes	Security: *	Device Tag	Node Name: PCU-2	Address: N14:7/6	Scan Class: A
			Off Label: Off	On Label: On				
PCU-2\VAH-3125B 1_ACK	Digital	PUMP P-3125B HIGH MOTOR VIBRATION Y-76.1 ACKNOWLEDGE	Alarmed: No	Security: *	Device Tag	Node Name: PCU-2	Address: N14:213/6	Scan Class: A
			Off Label: Off	On Label: On				
PCU-2\VAH-3125B 2	Digital	PUMP P-3125B HIGH MOTOR VIBRATION Y-76.1	Alarmed: Yes	Security: *	Device Tag	Node Name: PCU-2	Address: N14:7/7	Scan Class: A
			Off Label: Off	On Label: On				
PCU-2\VAH-3125B 2_ACK	Digital	PUMP P-3125B HIGH MOTOR VIBRATION Y-76.1 ACKNOWLEDGE	Alarmed: No	Security: *	Device Tag	Node Name: PCU-2	Address: N14:213/7	Scan Class: A
			Off Label: Off	On Label: On				
PCU-2\VI-3125A1	Analog	PUMP P-3125A BEARING VIBRATION	Alarmed: No	Security: *	Device Tag	Node Name: PCU-2	Address: N14:54	Scan Class: A
			Minimum : 0	Maximum : 1	Scale : 1	Offset : 0	Units: IN/SEC	Data Type: Integer
PCU-2\VI-3125A1_ A	Digital	PCU-2 INPUT ANALOG OVER OR UNDER RANGE ALARM	Alarmed: Yes	Security: *	Device Tag	Node Name: PCU-2	Address: N14:14/8	Scan Class: A
			Off Label: Off	On Label: On				
PCU-2\VI-3125A1_ A_ACK	Digital	PCU-2 INPUT ANALOG OVER OR UNDER RANGE ALARM ACKNOWLEDGE	Alarmed: No	Security: *	Device Tag	Node Name: PCU-2	Address: N14:213/8	Scan Class: A
			Off Label: Off	On Label: On				
PCU-2\VI-3125A2	Analog	PUMP P-3125A BEARING VIBRATION	Alarmed: No	Security: *	Device Tag	Node Name: PCU-2	Address: N14:56	Scan Class: A
			Minimum : 0	Maximum : 1	Scale : 1	Offset : 0	Units: IN/SEC	Data Type: Integer
PCU-2\VI-3125A2_ A	Digital	PCU-2 INPUT ANALOG OVER OR UNDER RANGE ALARM	Alarmed: Yes	Security: *	Device Tag	Node Name: PCU-2	Address: N14:14/10	Scan Class: A
			Off Label: Off	On Label: On				
PCU-2\VI-3125A2_ A_ACK	Digital	PCU-2 INPUT ANALOG OVER OR UNDER RANGE ALARM ACKNOWLEDGE	Alarmed: No	Security: *	Device Tag	Node Name: PCU-2	Address: N14:213/9	Scan Class: A
			Off Label: Off	On Label: On				
PCU-2\VI-3125B1	Analog	PUMP P-3125B BEARING VIBRATION	Alarmed: No	Security: *	Device Tag	Node Name: PCU-2	Address: N14:55	Scan Class: A
			Minimum : 0	Maximum : 1	Scale : 1	Offset : 0	Units: IN/SEC	Data Type: Integer
PCU-2\VI-3125B1_ A	Digital	PCU-2 INPUT ANALOG OVER OR UNDER RANGE ALARM	Alarmed: Yes	Security: *	Device Tag	Node Name: PCU-2	Address: N14:14/9	Scan Class: A
			Off Label: Off	On Label: On				
PCU-2\VI-3125B1_ A_ACK	Digital	PCU-2 INPUT ANALOG OVER OR UNDER RANGE ALARM ACKNOWLEDGE	Alarmed: No	Security: *	Device Tag	Node Name: PCU-2	Address: N14:213/10	Scan Class: A
			Off Label: Off	On Label: On				
PCU-2\VI-3125B2	Analog	PUMP P-3125B BEARING VIBRATION	Alarmed: No	Security: *	Device Tag	Node Name: PCU-2	Address: N14:57	Scan Class: A
			Minimum : 0	Maximum : 1	Scale : 1	Offset : 0	Units: IN/SEC	Data Type: Integer
PCU-2\VI-3125B2_ A	Digital	PCU-2 INPUT ANALOG OVER OR UNDER RANGE ALARM	Alarmed: Yes	Security: *	Device Tag	Node Name: PCU-2	Address: N14:14/11	Scan Class: A
			Off Label: Off	On Label: On				
PCU-2\VI-3125B2_ A_ACK	Digital	PCU-2 INPUT ANALOG OVER OR UNDER RANGE ALARM ACKNOWLEDGE	Alarmed: No	Security: *	Device Tag	Node Name: PCU-2	Address: N14:213/11	Scan Class: A
			Off Label: Off	On Label: On				
PCU-2\XA-3125A	Digital	BOOSTER PUMP P-3125A FAILURE Y-74.1	Alarmed: Yes	Security: *	Device Tag	Node Name: PCU-2	Address: N14:0/14	Scan Class: A
			Off Label: Off	On Label: On				

Tag Name	Tag Type	Description						
PCU-2\XA-3125A_ACK	Digital	BOOSTER PUMP P-3125A FAILURE Y-74.1 ACKNOWLEDGE	Alarmed: No	Security: *	Device Tag	Node Name: PCU-2	Address: N14:213/12	Scan Class: A
			Off Label: Off	On Label: On				
PCU-2\XA-3125B	Digital	BOOSTER PUMP P-3125B FAILURE Y-74.2	Alarmed: Yes	Security: *	Device Tag	Node Name: PCU-2	Address: N14:0/15	Scan Class: A
			Off Label: Off	On Label: On				
PCU-2\XA-3125B_ACK	Digital	BOOSTER PUMP P-3125B FAILURE Y-74.2 ACKNOWLEDGE	Alarmed: No	Security: *	Device Tag	Node Name: PCU-2	Address: N14:213/13	Scan Class: A
			Off Label: Off	On Label: On				
PCU-2\YA-3101A	Digital	ENCASEMENT RUPTURE DISK ACTIVATED [OFF = ALARM] OIT	Alarmed: Yes	Security: *	Device Tag	Node Name: PCU-2	Address: N14:19/4	Scan Class: A
			Off Label: Off	On Label: On				
PCU-2\YA-3101A_ACK	Digital	ENCASEMENT RUPTURE DISK ACTIVATED [OFF = ALARM] OIT ACKNOWLEDGE	Alarmed: No	Security: *	Device Tag	Node Name: PCU-2	Address: N14:213/14	Scan Class: A
			Off Label: Off	On Label: On				
PCU-2\YA-3101B	Digital	ENCASEMENT RUPTURE DISK ACTIVATED [OFF = ALARM] OIT	Alarmed: Yes	Security: *	Device Tag	Node Name: PCU-2	Address: N14:19/5	Scan Class: A
			Off Label: Off	On Label: On				
PCU-2\YA-3101B_ACK	Digital	ENCASEMENT RUPTURE DISK ACTIVATED [OFF = ALARM] OIT ACKNOWLEDGE	Alarmed: No	Security: *	Device Tag	Node Name: PCU-2	Address: N14:213/15	Scan Class: A
			Off Label: Off	On Label: On				
PCU-2\YA-3101C	Digital	ENCASEMENT RUPTURE DISK ACTIVATED [OFF = ALARM] OIT	Alarmed: Yes	Security: *	Device Tag	Node Name: PCU-2	Address: N14:19/6	Scan Class: A
			Off Label: Off	On Label: On				
PCU-2\YA-3101C_ACK	Digital	ENCASEMENT RUPTURE DISK ACTIVATED [OFF = ALARM] OIT ACKNOWLEDGE	Alarmed: No	Security: *	Device Tag	Node Name: PCU-2	Address: N14:214/0	Scan Class: A
			Off Label: Off	On Label: On				
PCU-2\YA-3101D	Digital	ENCASEMENT RUPTURE DISK ACTIVATED [OFF = ALARM] OIT	Alarmed: Yes	Security: *	Device Tag	Node Name: PCU-2	Address: N14:19/7	Scan Class: A
			Off Label: Off	On Label: On				
PCU-2\YA-3101D_ACK	Digital	ENCASEMENT RUPTURE DISK ACTIVATED [OFF = ALARM] OIT ACKNOWLEDGE	Alarmed: No	Security: *	Device Tag	Node Name: PCU-2	Address: N14:214/1	Scan Class: A
			Off Label: Off	On Label: On				
PCU-2\YA-3101E	Digital	ENCASEMENT RUPTURE DISK ACTIVATED [OFF = ALARM] OIT	Alarmed: Yes	Security: *	Device Tag	Node Name: PCU-2	Address: N14:19/8	Scan Class: A
			Off Label: Off	On Label: On				
PCU-2\YA-3101E_ACK	Digital	ENCASEMENT RUPTURE DISK ACTIVATED [OFF = ALARM] OIT ACKNOWLEDGE	Alarmed: No	Security: *	Device Tag	Node Name: PCU-2	Address: N14:214/2	Scan Class: A
			Off Label: Off	On Label: On				
PCU-2\YA-3101F	Digital	ENCASEMENT RUPTURE DISK ACTIVATED [OFF = ALARM] OIT	Alarmed: Yes	Security: *	Device Tag	Node Name: PCU-2	Address: N14:19/9	Scan Class: A
			Off Label: Off	On Label: On				
PCU-2\YA-3101F_ACK	Digital	ENCASEMENT RUPTURE DISK ACTIVATED [OFF = ALARM] OIT ACKNOWLEDGE	Alarmed: No	Security: *	Device Tag	Node Name: PCU-2	Address: N14:214/3	Scan Class: A
			Off Label: Off	On Label: On				

Tag Name	Tag Type	Description						
PCU-2\YA-3101G	Digital	ENCASEMENT RUPTURE DISK ACTIVATED [OFF = ALARM] OIT	Alarmed: Yes	Security: *	Device Tag	Node Name: PCU-2	Address: N14:19/10	Scan Class: A
			Off Label: Off	On Label: On				
PCU-2\YA-3101G_ACK	Digital	ENCASEMENT RUPTURE DISK ACTIVATED [OFF = ALARM] OIT ACKNOWLEDGE	Alarmed: No	Security: *	Device Tag	Node Name: PCU-2	Address: N14:214/4	Scan Class: A
			Off Label: Off	On Label: On				
PCU-2\YA-3101H	Digital	ENCASEMENT RUPTURE DISK ACTIVATED [OFF = ALARM] OIT	Alarmed: Yes	Security: I	Device Tag	Node Name: PCU-2	Address: N14:19/11	Scan Class: A
			Off Label: Off	On Label: On				
PCU-2\YA-3101H_ACK	Digital	ENCASEMENT RUPTURE DISK ACTIVATED [OFF = ALARM] OIT ACKNOWLEDGE	Alarmed: No	Security: *	Device Tag	Node Name: PCU-2	Address: N14:214/5	Scan Class: A
			Off Label: Off	On Label: On				
PCU-2\YL-3125A3	Digital	LOCAL/REMOTE STATUS FOR P-3125A [ON = REMOTE] OIT	Alarmed: No	Security: *	Device Tag	Node Name: PCU-2	Address: N14:21/12	Scan Class: A
			Off Label: Off	On Label: On				
PCU-2\YL-3125B3	Digital	LOCAL/REMOTE STATUS FOR P-3125B [ON = REMOTE] OIT	Alarmed: No	Security: *	Device Tag	Node Name: PCU-2	Address: N14:21/13	Scan Class: A
			Off Label: Off	On Label: On				
PCU-2\ZA-3125C	Digital	VALVE SOV-3125C POSITION SWITCH FAILURE Y-84.1	Alarmed: Yes	Security: *	Device Tag	Node Name: PCU-2	Address: N14:8/9	Scan Class: A
			Off Label: Off	On Label: On				
PCU-2\ZA-3125C1	Digital	VALVE SOV-3125C FAILED TO OPEN Y-84.1	Alarmed: Yes	Security: *	Device Tag	Node Name: PCU-2	Address: N14:8/7	Scan Class: A
			Off Label: Off	On Label: On				
PCU-2\ZA-3125C1_ACK	Digital	VALVE SOV-3125C FAILED TO OPEN Y-84.1 ACKNOWLEDGE	Alarmed: No	Security: *	Device Tag	Node Name: PCU-2	Address: N14:214/6	Scan Class: A
			Off Label: Off	On Label: On				
PCU-2\ZA-3125C2	Digital	VALVE SOV-3125C FAILED TO CLOSE Y-84.1	Alarmed: Yes	Security: *	Device Tag	Node Name: PCU-2	Address: N14:8/5	Scan Class: A
			Off Label: Off	On Label: On				
PCU-2\ZA-3125C2_ACK	Digital	VALVE SOV-3125C FAILED TO CLOSE Y-84.1 ACKNOWLEDGE	Alarmed: No	Security: *	Device Tag	Node Name: PCU-2	Address: N14:214/7	Scan Class: A
			Off Label: Off	On Label: On				
PCU-2\ZA-3125C_ACK	Digital	VALVE SOV-3125C POSITION SWITCH FAILURE Y-84.1 ACKNOWLEDGE	Alarmed: No	Security: *	Device Tag	Node Name: PCU-2	Address: N14:214/8	Scan Class: A
			Off Label: Off	On Label: On				
PCU-2\ZA-3125D	Digital	VALVE SOV-3125D POSITION SWITCH FAILURE Y-86.1	Alarmed: Yes	Security: *	Device Tag	Node Name: PCU-2	Address: N14:9/3	Scan Class: A
			Off Label: Off	On Label: On				
PCU-2\ZA-3125D1	Digital	VALVE SOV-3125D FAILED TO OPEN Y-86.1	Alarmed: Yes	Security: *	Device Tag	Node Name: PCU-2	Address: N14:9/1	Scan Class: A
			Off Label: Off	On Label: On				
PCU-2\ZA-3125D1_ACK	Digital	VALVE SOV-3125D FAILED TO OPEN Y-86.1 ACKNOWLEDGE	Alarmed: No	Security: *	Device Tag	Node Name: PCU-2	Address: N14:214/9	Scan Class: A
			Off Label: Off	On Label: On				
PCU-2\ZA-3125D2	Digital	VALVE SOV-3125D FAILED TO CLOSE Y-86.1	Alarmed: Yes	Security: *	Device Tag	Node Name: PCU-2	Address: N14:8/15	Scan Class: A
			Off Label: Off	On Label: On				
PCU-2\ZA-3125D2_ACK	Digital	VALVE SOV-3125D FAILED TO CLOSE Y-86.1 ACKNOWLEDGE	Alarmed: No	Security: *	Device Tag	Node Name: PCU-2	Address: N14:214/10	Scan Class: A
			Off Label: Off	On Label: On				

Tag Name	Tag Type	Description						
PCU-2\ZA-3125D_ACK	Digital	VALVE SOV-3125D POSITION SWITCH FAILURE Y-86.1 ACKNOWLEDGE	Alarmed: No	Security: *	Device Tag	Node Name: PCU-2	Address: N14:214/11	Scan Class: A
			Off Label: Off	On Label: On				
PCU-2\ZA-3125E	Digital	VALVE SOV-3125E POSITION SWITCH FAILURE Y-83.1	Alarmed: Yes	Security: *	Device Tag	Node Name: PCU-2	Address: N14:8/4	Scan Class: A
			Off Label: Off	On Label: On				
PCU-2\ZA-3125E1	Digital	VALVE SOV-3125E FAILED TO OPEN Y-83.1	Alarmed: Yes	Security: *	Device Tag	Node Name: PCU-2	Address: N14:8/2	Scan Class: A
			Off Label: Off	On Label: On				
PCU-2\ZA-3125E1_ACK	Digital	VALVE SOV-3125E FAILED TO OPEN Y-83.1 ACKNOWLEDGE	Alarmed: No	Security: *	Device Tag	Node Name: PCU-2	Address: N14:214/12	Scan Class: A
			Off Label: Off	On Label: On				
PCU-2\ZA-3125E2	Digital	VALVE SOV-3125E FAILED TO CLOSE Y-83.1	Alarmed: Yes	Security: *	Device Tag	Node Name: PCU-2	Address: N14:8/0	Scan Class: A
			Off Label: Off	On Label: On				
PCU-2\ZA-3125E2_ACK	Digital	VALVE SOV-3125E FAILED TO CLOSE Y-83.1 ACKNOWLEDGE	Alarmed: No	Security: *	Device Tag	Node Name: PCU-2	Address: N14:214/13	Scan Class: A
			Off Label: Off	On Label: On				
PCU-2\ZA-3125E_ACK	Digital	VALVE SOV-3125E POSITION SWITCH FAILURE Y-83.1 ACKNOWLEDGE	Alarmed: No	Security: *	Device Tag	Node Name: PCU-2	Address: N14:214/14	Scan Class: A
			Off Label: Off	On Label: On				
PCU-2\ZA-3125G	Digital	VALVE SOV-3125G POSITION SWITCH FAILURE Y-85.1	Alarmed: Yes	Security: *	Device Tag	Node Name: PCU-2	Address: N14:8/14	Scan Class: A
			Off Label: Off	On Label: On				
PCU-2\ZA-3125G1	Digital	VALVE SOV-3125G FAILED TO OPEN Y-85.1	Alarmed: Yes	Security: *	Device Tag	Node Name: PCU-2	Address: N14:8/12	Scan Class: A
			Off Label: Off	On Label: On				
PCU-2\ZA-3125G1_ACK	Digital	VALVE SOV-3125G FAILED TO OPEN Y-85.1 ACKNOWLEDGE	Alarmed: No	Security: *	Device Tag	Node Name: PCU-2	Address: N14:214/15	Scan Class: A
			Off Label: Off	On Label: On				
PCU-2\ZA-3125G2	Digital	VALVE SOV-3125G FAILED TO CLOSE Y-85.1	Alarmed: Yes	Security: *	Device Tag	Node Name: PCU-2	Address: N14:8/10	Scan Class: A
			Off Label: Off	On Label: On				
PCU-2\ZA-3125G2_ACK	Digital	VALVE SOV-3125G FAILED TO CLOSE Y-85.1 ACKNOWLEDGE	Alarmed: No	Security: *	Device Tag	Node Name: PCU-2	Address: N14:215/0	Scan Class: A
			Off Label: Off	On Label: On				
PCU-2\ZA-3125G_ACK	Digital	VALVE SOV-3125G POSITION SWITCH FAILURE Y-85.1 ACKNOWLEDGE	Alarmed: No	Security: *	Device Tag	Node Name: PCU-2	Address: N14:215/1	Scan Class: A
			Off Label: Off	On Label: On				
PCU-2\ZA-3156A	Digital	VALVE MOV-3156A POSITION SWITCH FAILURE Y-89.1	Alarmed: Yes	Security: *	Device Tag	Node Name: PCU-2	Address: N14:10/2	Scan Class: A
			Off Label: Off	On Label: On				
PCU-2\ZA-3156A1	Digital	VALVE MOV-3156A FAILED TO OPEN Y-89.1	Alarmed: Yes	Security: *	Device Tag	Node Name: PCU-2	Address: N14:10/0	Scan Class: A
			Off Label: Off	On Label: On				
PCU-2\ZA-3156A1_ACK	Digital	VALVE MOV-3156A FAILED TO OPEN Y-89.1 ACKNOWLEDGE	Alarmed: No	Security: *	Device Tag	Node Name: PCU-2	Address: N14:215/2	Scan Class: A
			Off Label: Off	On Label: On				
PCU-2\ZA-3156A2	Digital	VALVE MOV-3156A FAILED TO CLOSE Y-89.1	Alarmed: Yes	Security: *	Device Tag	Node Name: PCU-2	Address: N14:9/14	Scan Class: A
			Off Label: Off	On Label: On				

Tag Name	Tag Type	Description						
PCU-2\ZA-3156A2_ACK	Digital	VALVE MOV-3156A FAILED TO CLOSE Y-89.1 ACKNOWLEDGE	Alarmed: No	Security: *	Device Tag	Node Name: PCU-2	Address: N14:215/3	Scan Class: A
			Off Label: Off	On Label: On				
PCU-2\ZA-3156A_ACK	Digital	VALVE MOV-3156A POSITION SWITCH FAILURE Y-89.1 ACKNOWLEDGE	Alarmed: No	Security: *	Device Tag	Node Name: PCU-2	Address: N14:215/4	Scan Class: A
			Off Label: Off	On Label: On				
PCU-2\ZA-3156B	Digital	VALVE MOV-3156B POSITION SWITCH FAILURE Y-89.2	Alarmed: Yes	Security: *	Device Tag	Node Name: PCU-2	Address: N14:10/7	Scan Class: A
			Off Label: Off	On Label: On				
PCU-2\ZA-3156B1	Digital	VALVE MOV-3156B FAILED TO OPEN Y-89.2	Alarmed: Yes	Security: *	Device Tag	Node Name: PCU-2	Address: N14:10/5	Scan Class: A
			Off Label: Off	On Label: On				
PCU-2\ZA-3156B1_ACK	Digital	VALVE MOV-3156B FAILED TO OPEN Y-89.2 ACKNOWLEDGE	Alarmed: No	Security: *	Device Tag	Node Name: PCU-2	Address: N14:215/5	Scan Class: A
			Off Label: Off	On Label: On				
PCU-2\ZA-3156B2	Digital	VALVE MOV-3156B FAILED TO CLOSE Y-89.2	Alarmed: Yes	Security: *	Device Tag	Node Name: PCU-2	Address: N14:10/3	Scan Class: A
			Off Label: Off	On Label: On				
PCU-2\ZA-3156B2_ACK	Digital	VALVE MOV-3156B FAILED TO CLOSE Y-89.2 ACKNOWLEDGE	Alarmed: No	Security: *	Device Tag	Node Name: PCU-2	Address: N14:215/6	Scan Class: A
			Off Label: Off	On Label: On				
PCU-2\ZA-3156B_ACK	Digital	VALVE MOV-3156B POSITION SWITCH FAILURE Y-89.2 ACKNOWLEDGE	Alarmed: No	Security: *	Device Tag	Node Name: PCU-2	Address: N14:215/7	Scan Class: A
			Off Label: Off	On Label: On				
PCU-2\ZA-3173A	Digital	VALVE SOV-3173A POSITION SWITCH FAILURE Y-87.1	Alarmed: Yes	Security: *	Device Tag	Node Name: PCU-2	Address: N14:9/8	Scan Class: A
			Off Label: Off	On Label: On				
PCU-2\ZA-3173A1	Digital	VALVE SOV-3173A FAILED TO OPEN Y-87.1	Alarmed: Yes	Security: *	Device Tag	Node Name: PCU-2	Address: N14:9/6	Scan Class: A
			Off Label: Off	On Label: On				
PCU-2\ZA-3173A1_ACK	Digital	VALVE SOV-3173A FAILED TO OPEN Y-87.1 ACKNOWLEDGE	Alarmed: No	Security: *	Device Tag	Node Name: PCU-2	Address: N14:215/8	Scan Class: A
			Off Label: Off	On Label: On				
PCU-2\ZA-3173A2	Digital	VALVE SOV-3173A FAILED TO CLOSE Y-87.1	Alarmed: Yes	Security: *	Device Tag	Node Name: PCU-2	Address: N14:9/4	Scan Class: A
			Off Label: Off	On Label: On				
PCU-2\ZA-3173A2_ACK	Digital	VALVE SOV-3173A FAILED TO CLOSE Y-87.1 ACKNOWLEDGE	Alarmed: No	Security: *	Device Tag	Node Name: PCU-2	Address: N14:215/9	Scan Class: A
			Off Label: Off	On Label: On				
PCU-2\ZA-3173A_ACK	Digital	VALVE SOV-3173A POSITION SWITCH FAILURE Y-87.1 ACKNOWLEDGE	Alarmed: No	Security: *	Device Tag	Node Name: PCU-2	Address: N14:215/10	Scan Class: A
			Off Label: Off	On Label: On				
PCU-2\ZA-3173B	Digital	VALVE SOV-3173B POSITION SWITCH FAILURE Y-87.2	Alarmed: Yes	Security: *	Device Tag	Node Name: PCU-2	Address: N14:9/13	Scan Class: A
			Off Label: Off	On Label: On				
PCU-2\ZA-3173B1	Digital	VALVE SOV-3173B FAILED TO OPEN Y-87.2	Alarmed: Yes	Security: *	Device Tag	Node Name: PCU-2	Address: N14:9/11	Scan Class: A
			Off Label: Off	On Label: On				

Tag Name	Tag Type	Description						
PCU-2\ZA-3173B1_ACK	Digital	VALVE SOV-3173B FAILED TO OPEN Y-87.2 ACKNOWLEDGE	Alarmed: No	Security: *	Device Tag	Node Name: PCU-2	Address: N14:215/11	Scan Class: A
			Off Label: Off	On Label: On				
PCU-2\ZA-3173B2	Digital	VALVE SOV-3173B FAILED TO CLOSE Y-87.2	Alarmed: Yes	Security: *	Device Tag	Node Name: PCU-2	Address: N14:9/9	Scan Class: A
			Off Label: Off	On Label: On				
PCU-2\ZA-3173B2_ACK	Digital	VALVE SOV-3173B FAILED TO CLOSE Y-87.2 ACKNOWLEDGE	Alarmed: No	Security: *	Device Tag	Node Name: PCU-2	Address: N14:215/12	Scan Class: A
			Off Label: Off	On Label: On				
PCU-2\ZA-3173B_ACK	Digital	VALVE SOV-3173B POSITION SWITCH FAILURE Y-87.2 ACKNOWLEDGE	Alarmed: No	Security: *	Device Tag	Node Name: PCU-2	Address: N14:215/13	Scan Class: A
			Off Label: Off	On Label: On				
PCU-2\ZA-3182A	Digital	VALVE POSITION SWITCH FAILURE Y-71.1	Alarmed: Yes	Security: *	Device Tag	Node Name: PCU-2	Address: N14:1/8	Scan Class: A
			Off Label: Off	On Label: On				
PCU-2\ZA-3182A1	Digital	VALVE FAILED TO OPEN Y-71.1	Alarmed: Yes	Security: *	Device Tag	Node Name: PCU-2	Address: N14:1/6	Scan Class: A
			Off Label: Off	On Label: On				
PCU-2\ZA-3182A1_ACK	Digital	VALVE FAILED TO OPEN Y-71.1 ACKNOWLEDGE	Alarmed: No	Security: *	Device Tag	Node Name: PCU-2	Address: N14:215/14	Scan Class: A
			Off Label: Off	On Label: On				
PCU-2\ZA-3182A2	Digital	VALVE FAILED TO CLOSE Y-71.1	Alarmed: Yes	Security: *	Device Tag	Node Name: PCU-2	Address: N14:1/4	Scan Class: A
			Off Label: Off	On Label: On				
PCU-2\ZA-3182A2_ACK	Digital	VALVE FAILED TO CLOSE Y-71.1 ACKNOWLEDGE	Alarmed: No	Security: *	Device Tag	Node Name: PCU-2	Address: N14:215/15	Scan Class: A
			Off Label: Off	On Label: On				
PCU-2\ZA-3182A_ACK	Digital	VALVE POSITION SWITCH FAILURE Y-71.1 ACKNOWLEDGE	Alarmed: No	Security: *	Device Tag	Node Name: PCU-2	Address: N14:216/0	Scan Class: A
			Off Label: Off	On Label: On				
PCU-2\ZA-3182B	Digital	VALVE POSITION SWITCH FAILURE Y-71.1	Alarmed: Yes	Security: *	Device Tag	Node Name: PCU-2	Address: N14:2/0	Scan Class: A
			Off Label: Off	On Label: On				
PCU-2\ZA-3182B1	Digital	VALVE FAILED TO OPEN Y-71.1	Alarmed: Yes	Security: *	Device Tag	Node Name: PCU-2	Address: N14:1/14	Scan Class: A
			Off Label: Off	On Label: On				
PCU-2\ZA-3182B1_ACK	Digital	VALVE FAILED TO OPEN Y-71.1 ACKNOWLEDGE	Alarmed: No	Security: *	Device Tag	Node Name: PCU-2	Address: N14:216/1	Scan Class: A
			Off Label: Off	On Label: On				
PCU-2\ZA-3182B2	Digital	VALVE FAILED TO CLOSE Y-71.1	Alarmed: Yes	Security: *	Device Tag	Node Name: PCU-2	Address: N14:1/12	Scan Class: A
			Off Label: Off	On Label: On				
PCU-2\ZA-3182B2_ACK	Digital	VALVE FAILED TO CLOSE Y-71.1 ACKNOWLEDGE	Alarmed: No	Security: *	Device Tag	Node Name: PCU-2	Address: N14:216/2	Scan Class: A
			Off Label: Off	On Label: On				
PCU-2\ZA-3182B_ACK	Digital	VALVE POSITION SWITCH FAILURE Y-71.1 ACKNOWLEDGE	Alarmed: No	Security: *	Device Tag	Node Name: PCU-2	Address: N14:216/3	Scan Class: A
			Off Label: Off	On Label: On				
PCU-2\ZA-3183A	Digital	VALVE POSITION SWITCH FAILURE Y-71.1	Alarmed: Yes	Security: *	Device Tag	Node Name: PCU-2	Address: N14:2/5	Scan Class: A
			Off Label: Off	On Label: On				
PCU-2\ZA-3183A1	Digital	VALVE FAILED TO OPEN Y-71.1	Alarmed: Yes	Security: *	Device Tag	Node Name: PCU-2	Address: N14:2/3	Scan Class: A
			Off Label: Off	On Label: On				
PCU-2\ZA-3183A1_ACK	Digital	VALVE FAILED TO OPEN Y-71.1 ACKNOWLEDGE	Alarmed: No	Security: *	Device Tag	Node Name: PCU-2	Address: N14:216/4	Scan Class: A
			Off Label: Off	On Label: On				
PCU-2\ZA-3183A2	Digital	VALVE FAILED TO CLOSE Y-71.1	Alarmed: Yes	Security: *	Device Tag	Node Name: PCU-2	Address: N14:2/1	Scan Class: A
			Off Label: Off	On Label: On				

Tag Name	Tag Type	Description						
PCU-2\ZA-3183A2_ACK	Digital	VALVE FAILED TO CLOSE Y-71.1 ACKNOWLEDGE	Alarmed: No	Security: *	Device Tag	Node Name: PCU-2	Address: N14:216/5	Scan Class: A
			Off Label: Off	On Label: On				
PCU-2\ZA-3183A_ACK	Digital	VALVE POSITION SWITCH FAILURE Y-71.1 ACKNOWLEDGE	Alarmed: No	Security: *	Device Tag	Node Name: PCU-2	Address: N14:216/6	Scan Class: A
			Off Label: Off	On Label: On				
PCU-2\ZA-3183B	Digital	VALVE POSITION SWITCH FAILURE Y-71.1	Alarmed: Yes	Security: *	Device Tag	Node Name: PCU-2	Address: N14:2/10	Scan Class: A
			Off Label: Off	On Label: On				
PCU-2\ZA-3183B1	Digital	VALVE FAILED TO OPEN Y-71.1	Alarmed: Yes	Security: *	Device Tag	Node Name: PCU-2	Address: N14:2/8	Scan Class: A
			Off Label: Off	On Label: On				
PCU-2\ZA-3183B1_ACK	Digital	VALVE FAILED TO OPEN Y-71.1 ACKNOWLEDGE	Alarmed: No	Security: *	Device Tag	Node Name: PCU-2	Address: N14:216/7	Scan Class: A
			Off Label: Off	On Label: On				
PCU-2\ZA-3183B2	Digital	VALVE FAILED TO CLOSE Y-71.1	Alarmed: Yes	Security: *	Device Tag	Node Name: PCU-2	Address: N14:2/6	Scan Class: A
			Off Label: Off	On Label: On				
PCU-2\ZA-3183B2_ACK	Digital	VALVE FAILED TO CLOSE Y-71.1 ACKNOWLEDGE	Alarmed: No	Security: *	Device Tag	Node Name: PCU-2	Address: N14:216/8	Scan Class: A
			Off Label: Off	On Label: On				
PCU-2\ZA-3183B_ACK	Digital	VALVE POSITION SWITCH FAILURE Y-71.1 ACKNOWLEDGE	Alarmed: No	Security: *	Device Tag	Node Name: PCU-2	Address: N14:216/9	Scan Class: A
			Off Label: Off	On Label: On				
PCU-2\ZA-3184	Digital	VALVE POSITION SWITCH FAILURE Y-71.1	Alarmed: Yes	Security: *	Device Tag	Node Name: PCU-2	Address: N14:3/2	Scan Class: A
			Off Label: Off	On Label: On				
PCU-2\ZA-3184-1	Digital	VALVE FAILED TO OPEN Y-71.1	Alarmed: Yes	Security: *	Device Tag	Node Name: PCU-2	Address: N14:3/0	Scan Class: A
			Off Label: Off	On Label: On				
PCU-2\ZA-3184-1_ACK	Digital	VALVE FAILED TO OPEN Y-71.1 ACKNOWLEDGE	Alarmed: No	Security: *	Device Tag	Node Name: PCU-2	Address: N14:216/10	Scan Class: A
			Off Label: Off	On Label: On				
PCU-2\ZA-3184-2	Digital	VALVE FAILED TO CLOSE Y-71.1	Alarmed: Yes	Security: *	Device Tag	Node Name: PCU-2	Address: N14:2/14	Scan Class: A
			Off Label: Off	On Label: On				
PCU-2\ZA-3184-2_ACK	Digital	VALVE FAILED TO CLOSE Y-71.1 ACKNOWLEDGE	Alarmed: No	Security: *	Device Tag	Node Name: PCU-2	Address: N14:216/11	Scan Class: A
			Off Label: Off	On Label: On				
PCU-2\ZA-3184_ACK	Digital	VALVE POSITION SWITCH FAILURE Y-71.1 ACKNOWLEDGE	Alarmed: No	Security: *	Device Tag	Node Name: PCU-2	Address: N14:216/12	Scan Class: A
			Off Label: Off	On Label: On				
PCU-2\ZA-PUMPS	Digital	PCU-2 PUMP FAILURE FOR OVERVIEW SCREEN INDICATION	Alarmed: No	Security: *	Memory Tag	Initial Value: Off		
			Off Label: Off	On Label: On				
PCU-2\ZA-VALVES	Digital	PCU-2 VALVE FAILURE FOR OVERVIEW SCREEN INDICATION	Alarmed: No	Security: *	Memory Tag	Initial Value: Off		
			Off Label: Off	On Label: On				
PCU-2\ZLH-3125AA	Digital	MOV-3125AA IS OPEN Y79-1	Alarmed: No	Security: *	Device Tag	Node Name: PCU-2	Address: N14:18/0	Scan Class: A
			Off Label: Off	On Label: On				
PCU-2\ZLH-3125AB	Digital	MOV-3125AB IS OPEN Y79-1	Alarmed: No	Security: *	Device Tag	Node Name: PCU-2	Address: N14:18/2	Scan Class: A
			Off Label: Off	On Label: On				
PCU-2\ZLH-3125AC	Digital	MOV-3125AC IS OPEN Y79-1	Alarmed: No	Security: *	Device Tag	Node Name: PCU-2	Address: N14:18/4	Scan Class: A
			Off Label: Off	On Label: On				
PCU-2\ZLH-3125AD	Digital	MOV-3125AD IS OPEN Y79-1	Alarmed: No	Security: *	Device Tag	Node Name: PCU-2	Address: N14:18/6	Scan Class: A
			Off Label: Off	On Label: On				

Tag Name	Tag Type	Description						
PCU-2\ZLH-3125AE	Digital	MOV-3125AE IS OPEN Y79-1	Alarmed: No Off Label: Off	Security: * On Label: On	Device Tag	Node Name: PCU-2	Address: N14:18/8	Scan Class: A
PCU-2\ZLH-3125AF	Digital	MOV-3125AF IS OPEN Y79-1	Alarmed: No Off Label: Off	Security: * On Label: On	Device Tag	Node Name: PCU-2	Address: N14:18/10	Scan Class: A
PCU-2\ZLH-3125AG	Digital	MOV-3125AG IS OPEN Y79-1	Alarmed: No Off Label: Off	Security: * On Label: On	Device Tag	Node Name: PCU-2	Address: N14:18/12	Scan Class: A
PCU-2\ZLH-3125AH	Digital	MOV-3125AH IS OPEN Y79-1	Alarmed: No Off Label: Off	Security: * On Label: On	Device Tag	Node Name: PCU-2	Address: N14:18/14	Scan Class: A
PCU-2\ZLH-3125AJ	Digital	MOV-3125AJ IS OPEN Y79-2	Alarmed: No Off Label: Off	Security: * On Label: On	Device Tag	Node Name: PCU-2	Address: N14:19/0	Scan Class: A
PCU-2\ZLH-3125AK	Digital	MOV-3125AK IS OPEN Y79-2	Alarmed: No Off Label: Off	Security: * On Label: On	Device Tag	Node Name: PCU-2	Address: N14:19/2	Scan Class: A
PCU-2\ZLH-3125BA	Digital	MOV-3125BA IS OPEN Y80-1	Alarmed: No Off Label: Off	Security: * On Label: On	Device Tag	Node Name: PCU-2	Address: N14:16/0	Scan Class: A
PCU-2\ZLH-3125BB	Digital	MOV-3125BB IS OPEN Y80-1	Alarmed: No Off Label: Off	Security: * On Label: On	Device Tag	Node Name: PCU-2	Address: N14:16/2	Scan Class: A
PCU-2\ZLH-3125BC	Digital	MOV-3125BC IS OPEN Y80-1	Alarmed: No Off Label: Off	Security: * On Label: On	Device Tag	Node Name: PCU-2	Address: N14:16/4	Scan Class: A
PCU-2\ZLH-3125BD	Digital	MOV-3125BD IS OPEN Y80-1	Alarmed: No Off Label: Off	Security: * On Label: On	Device Tag	Node Name: PCU-2	Address: N14:16/6	Scan Class: A
PCU-2\ZLH-3125BE	Digital	MOV-3125BE IS OPEN Y80-1	Alarmed: No Off Label: Off	Security: * On Label: On	Device Tag	Node Name: PCU-2	Address: N14:16/8	Scan Class: A
PCU-2\ZLH-3125BF	Digital	MOV-3125BF IS OPEN Y80-1	Alarmed: No Off Label: Off	Security: * On Label: On	Device Tag	Node Name: PCU-2	Address: N14:16/10	Scan Class: A
PCU-2\ZLH-3125BG	Digital	MOV-3125BG IS OPEN Y80-1	Alarmed: No Off Label: Off	Security: * On Label: On	Device Tag	Node Name: PCU-2	Address: N14:16/12	Scan Class: A
PCU-2\ZLH-3125BH	Digital	MOV-3125BH IS OPEN Y80-1	Alarmed: No Off Label: Off	Security: * On Label: On	Device Tag	Node Name: PCU-2	Address: N14:16/14	Scan Class: A
PCU-2\ZLH-3125BJ	Digital	MOV-3125BJ IS OPEN Y81-2	Alarmed: No Off Label: Off	Security: * On Label: On	Device Tag	Node Name: PCU-2	Address: N14:17/0	Scan Class: A
PCU-2\ZLH-3125BK	Digital	MOV-3125BK IS OPEN Y81-2	Alarmed: No Off Label: Off	Security: * On Label: On	Device Tag	Node Name: PCU-2	Address: N14:17/2	Scan Class: A
PCU-2\ZLH-3125C	Digital	SOV-3125C IS OPEN Y84-1	Alarmed: No Off Label: Off	Security: * On Label: On	Device Tag	Node Name: PCU-2	Address: N14:20/0	Scan Class: A
PCU-2\ZLH-3125D	Digital	SOV-3125D IS OPEN Y86-1	Alarmed: No Off Label: Off	Security: * On Label: On	Device Tag	Node Name: PCU-2	Address: N14:20/2	Scan Class: A
PCU-2\ZLH-3125E	Digital	SOV-3125E IS OPEN Y83-1	Alarmed: No Off Label: Off	Security: * On Label: On	Device Tag	Node Name: PCU-2	Address: N14:20/4	Scan Class: A
PCU-2\ZLH-3125G	Digital	SOV-3125G IS OPEN Y85-1	Alarmed: No Off Label: Off	Security: * On Label: On	Device Tag	Node Name: PCU-2	Address: N14:20/6	Scan Class: A
PCU-2\ZLH-3156A	Digital	MOV-3156A IS OPEN Y89-1	Alarmed: No Off Label: Off	Security: * On Label: On	Device Tag	Node Name: PCU-2	Address: N14:21/10	Scan Class: A
PCU-2\ZLH-3156B	Digital	MOV-3156B IS OPEN Y89-2	Alarmed: No Off Label: Off	Security: * On Label: On	Device Tag	Node Name: PCU-2	Address: N14:20/10	Scan Class: A
PCU-2\ZLH-3163	Digital	SOV-3163 IS OPEN	Alarmed: No Off Label: Off	Security: * On Label: On	Device Tag	Node Name: PCU-2	Address: N14:20/12	Scan Class: A
PCU-2\ZLH-3173A	Digital	SOV-3173A IS OPEN Y87-1	Alarmed: No Off Label: Off	Security: * On Label: On	Device Tag	Node Name: PCU-2	Address: N14:20/14	Scan Class: A
PCU-2\ZLH-3173B	Digital	SOV-3173B IS OPEN Y87-2	Alarmed: No Off Label: Off	Security: * On Label: On	Device Tag	Node Name: PCU-2	Address: N14:20/8	Scan Class: A

Tag Name	Tag Type	Description						
PCU-2\ZLH-3182A	Digital	SOV-3182A IS OPEN Y71	Alarmed: No	Security: *	Device Tag	Node Name: PCU-2	Address: N14:21/0	Scan Class: A
			Off Label: Off	On Label: On				
PCU-2\ZLH-3182B	Digital	SOV-3182B IS OPEN Y71	Alarmed: No	Security: *	Device Tag	Node Name: PCU-2	Address: N14:21/2	Scan Class: A
			Off Label: Off	On Label: On				
PCU-2\ZLH-3183A	Digital	SOV-3183A IS OPEN Y71	Alarmed: No	Security: *	Device Tag	Node Name: PCU-2	Address: N14:21/4	Scan Class: A
			Off Label: Off	On Label: On				
PCU-2\ZLH-3183B	Digital	SOV-3183B IS OPEN Y71	Alarmed: No	Security: *	Device Tag	Node Name: PCU-2	Address: N14:21/6	Scan Class: A
			Off Label: Off	On Label: On				
PCU-2\ZLH-3184	Digital	SOV-3184 IS OPEN Y71	Alarmed: No	Security: *	Device Tag	Node Name: PCU-2	Address: N14:21/8	Scan Class: A
			Off Label: Off	On Label: On				
PCU-2\ZLL-3125AA	Digital	MOV-3125AA IS CLOSED Y80-1	Alarmed: No	Security: *	Device Tag	Node Name: PCU-2	Address: N14:18/1	Scan Class: A
			Off Label: Off	On Label: On				
PCU-2\ZLL-3125AB	Digital	MOV-3125AB IS CLOSED Y80-1	Alarmed: No	Security: *	Device Tag	Node Name: PCU-2	Address: N14:18/3	Scan Class: A
			Off Label: Off	On Label: On				
PCU-2\ZLL-3125AC	Digital	MOV-3125AC IS CLOSED Y80-1	Alarmed: No	Security: *	Device Tag	Node Name: PCU-2	Address: N14:18/5	Scan Class: A
			Off Label: Off	On Label: On				
PCU-2\ZLL-3125AD	Digital	MOV-3125AD IS CLOSED Y80-1	Alarmed: No	Security: *	Device Tag	Node Name: PCU-2	Address: N14:18/7	Scan Class: A
			Off Label: Off	On Label: On				
PCU-2\ZLL-3125AE	Digital	MOV-3125AE IS CLOSED Y80-1	Alarmed: No	Security: *	Device Tag	Node Name: PCU-2	Address: N14:18/9	Scan Class: A
			Off Label: Off	On Label: On				
PCU-2\ZLL-3125AF	Digital	MOV-3125AF IS CLOSED Y80-1	Alarmed: No	Security: *	Device Tag	Node Name: PCU-2	Address: N14:18/11	Scan Class: A
			Off Label: Off	On Label: On				
PCU-2\ZLL-3125AG	Digital	MOV-3125AG IS CLOSED Y80-1	Alarmed: No	Security: *	Device Tag	Node Name: PCU-2	Address: N14:18/13	Scan Class: A
			Off Label: Off	On Label: On				
PCU-2\ZLL-3125AH	Digital	MOV-3125AH IS CLOSED Y80-1	Alarmed: No	Security: *	Device Tag	Node Name: PCU-2	Address: N14:18/15	Scan Class: A
			Off Label: Off	On Label: On				
PCU-2\ZLL-3125AJ	Digital	MOV-3125AJ IS CLOSED Y80-2	Alarmed: No	Security: *	Device Tag	Node Name: PCU-2	Address: N14:19/1	Scan Class: A
			Off Label: Off	On Label: On				
PCU-2\ZLL-3125AK	Digital	MOV-3125AK IS CLOSED Y80-2	Alarmed: No	Security: *	Device Tag	Node Name: PCU-2	Address: N14:19/3	Scan Class: A
			Off Label: Off	On Label: On				
PCU-2\ZLL-3125BA	Digital	MOV-3125BA IS CLOSED Y81-1	Alarmed: No	Security: *	Device Tag	Node Name: PCU-2	Address: N14:16/1	Scan Class: A
			Off Label: Off	On Label: On				
PCU-2\ZLL-3125BB	Digital	MOV-3125BB IS CLOSED Y81-1	Alarmed: No	Security: *	Device Tag	Node Name: PCU-2	Address: N14:16/3	Scan Class: A
			Off Label: Off	On Label: On				
PCU-2\ZLL-3125BC	Digital	MOV-3125BC IS CLOSED Y81-1	Alarmed: No	Security: *	Device Tag	Node Name: PCU-2	Address: N14:16/5	Scan Class: A
			Off Label: Off	On Label: On				
PCU-2\ZLL-3125BD	Digital	MOV-3125BD IS CLOSED Y81-1	Alarmed: No	Security: *	Device Tag	Node Name: PCU-2	Address: N14:16/7	Scan Class: A
			Off Label: Off	On Label: On				
PCU-2\ZLL-3125BE	Digital	MOV-3125BE IS CLOSED Y81-1	Alarmed: No	Security: *	Device Tag	Node Name: PCU-2	Address: N14:16/9	Scan Class: A
			Off Label: Off	On Label: On				
PCU-2\ZLL-3125BF	Digital	MOV-3125BF IS CLOSED Y81-1	Alarmed: No	Security: *	Device Tag	Node Name: PCU-2	Address: N14:16/11	Scan Class: A
			Off Label: Off	On Label: On				
PCU-2\ZLL-3125BG	Digital	MOV-3125BG IS CLOSED Y81-1	Alarmed: No	Security: *	Device Tag	Node Name: PCU-2	Address: N14:16/13	Scan Class: A
			Off Label: Off	On Label: On				
PCU-2\ZLL-3125BH	Digital	MOV-3125BH IS CLOSED Y81-1	Alarmed: No	Security: *	Device Tag	Node Name: PCU-2	Address: N14:16/15	Scan Class: A
			Off Label: Off	On Label: On				
PCU-2\ZLL-3125BJ	Digital	MOV-3125BJ IS CLOSED Y81-2	Alarmed: No	Security: *	Device Tag	Node Name: PCU-2	Address: N14:17/1	Scan Class: A
			Off Label: Off	On Label: On				
PCU-2\ZLL-3125BK	Digital	MOV-3125BK IS CLOSED Y81-2	Alarmed: No	Security: *	Device Tag	Node Name: PCU-2	Address: N14:17/3	Scan Class: A
			Off Label: Off	On Label: On				

Tag Name	Tag Type	Description						
PCU-2\ZLL-3125C	Digital	SOV-3125C IS CLOSED Y84-1	Alarmed: No	Security: *	Device Tag	Node Name: PCU-2	Address: N14:20/1	Scan Class: A
			Off Label: Off	On Label: On				
PCU-2\ZLL-3125D	Digital	SOV-3125D IS CLOSED Y86-1	Alarmed: No	Security: *	Device Tag	Node Name: PCU-2	Address: N14:20/3	Scan Class: A
			Off Label: Off	On Label: On				
PCU-2\ZLL-3125E	Digital	SOV-3125E IS CLOSED Y83-1	Alarmed: No	Security: *	Device Tag	Node Name: PCU-2	Address: N14:20/5	Scan Class: A
			Off Label: Off	On Label: On				
PCU-2\ZLL-3125G	Digital	SOV-3125G IS CLOSED Y85-1	Alarmed: No	Security: *	Device Tag	Node Name: PCU-2	Address: N14:20/7	Scan Class: A
			Off Label: Off	On Label: On				
PCU-2\ZLL-3156A	Digital	MOV-3156A IS CLOSED Y89-1	Alarmed: No	Security: *	Device Tag	Node Name: PCU-2	Address: N14:21/11	Scan Class: A
			Off Label: Off	On Label: On				
PCU-2\ZLL-3156B	Digital	MOV-3156B IS CLOSED Y89-2	Alarmed: No	Security: *	Device Tag	Node Name: PCU-2	Address: N14:20/11	Scan Class: A
			Off Label: Off	On Label: On				
PCU-2\ZLL-3163	Digital	SOV-3163 IS CLOSED	Alarmed: No	Security: *	Device Tag	Node Name: PCU-2	Address: N14:20/13	Scan Class: A
			Off Label: Off	On Label: On				
PCU-2\ZLL-3173A	Digital	SOV-3173A IS CLOSED Y87-1	Alarmed: No	Security: *	Device Tag	Node Name: PCU-2	Address: N14:20/15	Scan Class: A
			Off Label: Off	On Label: On				
PCU-2\ZLL-3173B	Digital	SOV-3173B IS CLOSED Y87-2	Alarmed: No	Security: *	Device Tag	Node Name: PCU-2	Address: N14:20/9	Scan Class: A
			Off Label: Off	On Label: On				
PCU-2\ZLL-3182A	Digital	SOV-3182A IS CLOSED Y71	Alarmed: No	Security: *	Device Tag	Node Name: PCU-2	Address: N14:21/1	Scan Class: A
			Off Label: Off	On Label: On				
PCU-2\ZLL-3182B	Digital	SOV-3182B IS CLOSED Y71	Alarmed: No	Security: *	Device Tag	Node Name: PCU-2	Address: N14:21/3	Scan Class: A
			Off Label: Off	On Label: On				
PCU-2\ZLL-3183A	Digital	SOV-3183A IS CLOSED Y71	Alarmed: No	Security: *	Device Tag	Node Name: PCU-2	Address: N14:21/5	Scan Class: A
			Off Label: Off	On Label: On				
PCU-2\ZLL-3183B	Digital	SOV-3183B IS CLOSED Y71	Alarmed: No	Security: *	Device Tag	Node Name: PCU-2	Address: N14:21/7	Scan Class: A
			Off Label: Off	On Label: On				
PCU-2\ZLL-3184	Digital	SOV-3184 IS CLOSED Y71	Alarmed: No	Security: *	Device Tag	Node Name: PCU-2	Address: N14:21/9	Scan Class: A
			Off Label: Off	On Label: On				
PCU-3\0_OFF	Digital	ALWAYS OFF PLACE HOLDER FOR PCU-3 VARIABLES	Alarmed: No	Security: *	Memory Tag	Initial Value: Off		
			Off Label: Off	On Label: On				
PCU-3\BATT_BAD_PLC3	Digital	PLC-3 BATTERY IS BAD OR MISSING	Alarmed: Yes	Security: *	Device Tag	Node Name: PCU-3	Address: N14:0/6	Scan Class: A
			Off Label: Off	On Label: On				
PCU-3\BATT_BAD_PLC3_ACK	Digital	PLC-3 BATTERY IS BAD OR MISSING ACKNOWLEDGE	Alarmed: No	Security: *	Device Tag	Node Name: PCU-3	Address: N14:210/0	Scan Class: A
			Off Label: Off	On Label: On				
PCU-3\COM-31	Digital	COMMUN. WITH PCU-1 IGNORED	Alarmed: Yes	Security: *	Device Tag	Node Name: PCU-3	Address: N14:0/1	Scan Class: A
			Off Label: Off	On Label: On				
PCU-3\COM-31_ACK	Digital	COMMUN. WITH PCU-1 IGNORED ACKNOWLEDGE	Alarmed: No	Security: *	Device Tag	Node Name: PCU-3	Address: N14:210/1	Scan Class: A
			Off Label: Off	On Label: On				
PCU-3\COM-32	Digital	COMMUN. WITH PCU-2 IGNORED	Alarmed: Yes	Security: *	Device Tag	Node Name: PCU-3	Address: N14:0/2	Scan Class: A
			Off Label: Off	On Label: On				
PCU-3\COM-32_ACK	Digital	COMMUN. WITH PCU-2 IGNORED ACKNOWLEDGE	Alarmed: No	Security: *	Device Tag	Node Name: PCU-3	Address: N14:210/2	Scan Class: A
			Off Label: Off	On Label: On				
PCU-3\COM-34	Digital	COMMUN. WITH PCU-4 IGNORED	Alarmed: Yes	Security: *	Device Tag	Node Name: PCU-3	Address: N14:0/4	Scan Class: A
			Off Label: Off	On Label: On				
PCU-3\COM-34_ACK	Digital	COMMUN. WITH PCU-4 IGNORED ACKNOWLEDGE	Alarmed: No	Security: *	Device Tag	Node Name: PCU-3	Address: N14:210/3	Scan Class: A
			Off Label: Off	On Label: On				

Tag Name	Tag Type	Description						
PCU-3\COM-35	Digital	COMMUN. WITH PCU-5 IGNORED	Alarmed: Yes	Security: *	Device Tag	Node Name: PCU-3	Address: N14:0/5	Scan Class: A
			Off Label: Off	On Label: On				
PCU-3\COM-35_ACK	Digital	COMMUN. WITH PCU-5 IGNORED ACKNOWLEDGE	Alarmed: No	Security: *	Device Tag	Node Name: PCU-3	Address: N14:210/4	Scan Class: A
			Off Label: Off	On Label: On				
PCU-3\COM-3_OCS	Digital	COMMUNICATION WITH OCS IGNORED	Alarmed: Yes	Security: *	Device Tag	Node Name: PCU-3	Address: N14:0/3	Scan Class: A
			Off Label: Off	On Label: On				
PCU-3\COM-3_OCS_ACK	Digital	COMMUNICATION WITH OCS IGNORED ACKNOWLEDGE	Alarmed: No	Security: *	Device Tag	Node Name: PCU-3	Address: N14:210/5	Scan Class: A
			Off Label: Off	On Label: On				
PCU-3\COM-OCS_3	Digital	COMMUN. WITH PCU-3 IGNORED - DETECTED AT OCS	Alarmed: Yes	Security: *	Memory Tag	Initial Value: Off		
			Off Label: Off	On Label: On				
PCU-3\COM-OCS_3_ACK	Digital	COMMUN. WITH PCU-3 IGNORED - DETECTED AT OCS ACKNOWLEDGE	Alarmed: No	Security: *	Memory Tag	Initial Value: Off		
			Off Label: Off	On Label: On				
PCU-3\COM_OCS_3_MNT	Digital	Communiations failure with the PLC detected in this OIT	Alarmed: Yes	Security: *	Memory Tag	Initial Value: Off		
			Off Label: Off	On Label: On				
PCU-3\COM_OCS_3_OPR	Digital	Communiations failure with the PLC detected in this OIT	Alarmed: Yes	Security: *	Memory Tag	Initial Value: Off		
			Off Label: Off	On Label: On				
PCU-3\D_OVR_REQ_M	Digital	DISPLAY OVERVIEW SCREEN ON MAINTENANCE REQUEST	Alarmed: No	Security: *	Device Tag	Node Name: PCU-3	Address: N14:3/13	Scan Class: A
			Off Label: Off	On Label: On				
PCU-3\D_OVR_REQ_O	Digital	DISPLAY OVERVIEW SCREEN ON OPERATIONS REQUEST	Alarmed: No	Security: *	Device Tag	Node Name: PCU-3	Address: N14:3/14	Scan Class: A
			Off Label: Off	On Label: On				
PCU-3\D_OVR_STAT_M	Digital	DISPLAY OVERVIEW SCREEN ON MAINTENANCE	Alarmed: No	Security: *	Device Tag	Node Name: PCU-3	Address: N14:122/13	Scan Class: A
			Off Label: Off	On Label: On				
PCU-3\D_OVR_STAT_O	Digital	DISPLAY OVERVIEW SCREEN ON OPERATIONS	Alarmed: No	Security: *	Device Tag	Node Name: PCU-3	Address: N14:122/14	Scan Class: A
			Off Label: Off	On Label: On				
PCU-3\HB_COMM_CNT	Analog	Communications checking counter	Alarmed: No	Security: *	Memory Tag	Initial Value: 0		
			Minimum : 0	Maximum : 100	Scale : 1	Offset : 0	Units:	Data Type: (Default)
PCU-3\HB_COMM_OK	Digital	Communications from PLC currently OK	Alarmed: No	Security: *	Memory Tag	Initial Value: Off		
			Off Label: Off	On Label: On				
PCU-3\HB_COMM_TIME	Analog	ACCUMULATED TIME FOR THE COMMUNICATION CHECK HEART-BEAT	Alarmed: No	Security: *	Memory Tag	Initial Value: 0		
			Minimum : 0	Maximum : 100	Scale : 1	Offset : 0	Units:	Data Type: Integer
PCU-3\HB_OCS_PLC3	Digital	HEARTBEAT FROM OCS TO PLC-3	Alarmed: No	Security: *	Device Tag	Node Name: PCU-3	Address: N14:120/0	Scan Class: A
			Off Label: Off	On Label: On				
PCU-3\HB_OCS_PLC3_MNT	Analog	COMMUN. HEARTBEAT REGISTER FROM MAINTENANCE OIT TO PCU-3	Alarmed: No	Security: *	Device Tag	Node Name: PCU-3	Address: N14:135	Scan Class: A
			Minimum : 0	Maximum : 32767	Scale : 1	Offset : 0	Units: N/A	Data Type: Integer

Tag Name	Tag Type	Description						
PCU-3\HB_OCS_PLC3_OPR	Analog	COMMUN. HEARTBEAT REGISTER FROM OPERATIONS OIT TO PCU-3	Alarmed: No	Security: *	Device Tag	Node Name: PCU-3	Address: N14:134	Scan Class: A
			Minimum : 0	Maximum : 32767	Scale : 1	Offset : 0	Units: N/A	Data Type: Integer
PCU-3\HB_PLC3_OCS	Digital	HEARTBEAT FROM PLC-3 TO OCS	Alarmed: No	Security: *	Device Tag	Node Name: PCU-3	Address: N14:0/0	Scan Class: A
			Off Label: Off	On Label: On				
PCU-3\HB_PLC3_OCS_BOTH	Analog	COMMUN. HEARTBEAT REGISTER FROM PCU-3 TO BOTH OPERATOR TERMINALS	Alarmed: No	Security: *	Device Tag	Node Name: PCU-3	Address: N14:15	Scan Class: A
			Minimum : 0	Maximum : 32767	Scale : 1	Offset : 0	Units: N/A	Data Type: Integer
PCU-3\HB_REF	Analog	Communications heartbeat reference register	Alarmed: No	Security: *	Memory Tag	Initial Value: 0		
			Minimum : 0	Maximum : 32767	Scale : 1	Offset : 0	Units:	Data Type: (Default)
PCU-3\HS-1000A	Digital	OCS INITIATE TRANSFER Y-70.1	Alarmed: No	Security: *	Device Tag	Node Name: PCU-3	Address: N14:122/0	Scan Class: A
			Off Label: Off	On Label: On				
PCU-3\HS-1000B	Digital	OCS RESET TRANSFER Y-70.1	Alarmed: No	Security: *	Device Tag	Node Name: PCU-3	Address: N14:122/1	Scan Class: A
			Off Label: Off	On Label: On				
PCU-3\HS-1001	Digital	OCS SELECT TRANSFER TYPE 1 Y-70.1	Alarmed: No	Security: *	Device Tag	Node Name: PCU-3	Address: N14:122/2	Scan Class: A
			Off Label: Off	On Label: On				
PCU-3\HS-1002A	Digital	OCS SELECT TRANSFER TYPE 2A Y-70.1	Alarmed: No	Security: *	Device Tag	Node Name: PCU-3	Address: N14:122/3	Scan Class: A
			Off Label: Off	On Label: On				
PCU-3\HS-1002B	Digital	OCS SELECT TRANSFER TYPE 2B Y-70.1	Alarmed: No	Security: *	Device Tag	Node Name: PCU-3	Address: N14:122/4	Scan Class: A
			Off Label: Off	On Label: On				
PCU-3\HS-1003	Digital	OCS SELECT TRANSFER TYPE 3 Y-70.1	Alarmed: No	Security: *	Device Tag	Node Name: PCU-3	Address: N14:122/5	Scan Class: A
			Off Label: Off	On Label: On				
PCU-3\HS-1010A	Digital	LEAK DETECTION OVERRIDE Y-72.1	Alarmed: No	Security: *	Device Tag	Node Name: PCU-3	Address: N14:121/1	Scan Class: A
			Off Label: Off	On Label: On				
PCU-3\HS-1010B	Digital	LEAK DETECTION OVERRIDE RESET Y-72.1	Alarmed: No	Security: *	Device Tag	Node Name: PCU-3	Address: N14:121/2	Scan Class: A
			Off Label: Off	On Label: On				
PCU-3\HS-3165A1	Digital	OCS OPEN VALVE SOV-3165A Y71	Alarmed: No	Security: *	Device Tag	Node Name: PCU-3	Address: N14:120/14	Scan Class: A
			Off Label: Off	On Label: On				
PCU-3\HS-3165A2	Digital	OCS CLOSE VALVE SOV-3165A Y71	Alarmed: No	Security: *	Device Tag	Node Name: PCU-3	Address: N14:120/15	Scan Class: A
			Off Label: Off	On Label: On				
PCU-3\HS-3165B1	Digital	OCS OPEN VALVE SOV-3165B Y71	Alarmed: No	Security: *	Device Tag	Node Name: PCU-3	Address: N14:121/5	Scan Class: A
			Off Label: Off	On Label: On				
PCU-3\HS-3165B2	Digital	OCS CLOSE VALVE SOV-3165B Y71	Alarmed: No	Security: *	Device Tag	Node Name: PCU-3	Address: N14:121/6	Scan Class: A
			Off Label: Off	On Label: On				
PCU-3\HS-3166A1	Digital	OCS OPEN VALVE SOV-3166A Y71	Alarmed: No	Security: *	Device Tag	Node Name: PCU-3	Address: N14:121/3	Scan Class: A
			Off Label: Off	On Label: On				
PCU-3\HS-3166A2	Digital	OCS CLOSE VALVE SOV-3166A Y71	Alarmed: No	Security: *	Device Tag	Node Name: PCU-3	Address: N14:121/4	Scan Class: A
			Off Label: Off	On Label: On				
PCU-3\HS-3166B1	Digital	OCS OPEN VALVE SOV-3166B Y71	Alarmed: No	Security: *	Device Tag	Node Name: PCU-3	Address: N14:121/7	Scan Class: A
			Off Label: Off	On Label: On				
PCU-3\HS-3166B2	Digital	OCS CLOSE VALVE SOV-3166B Y71	Alarmed: No	Security: *	Device Tag	Node Name: PCU-3	Address: N14:121/8	Scan Class: A
			Off Label: Off	On Label: On				

Tag Name	Tag Type	Description						
PCU-3\HS-3167A1	Digital	OCS OPEN VALVE SOV-3167A Y88-1	Alarmed: No	Security: *	Device Tag	Node Name: PCU-3	Address: N14:121/9	Scan Class: A
			Off Label: Off	On Label: On				
PCU-3\HS-3167A2	Digital	OCS CLOSE VALVE SOV-3167A Y88-1	Alarmed: No	Security: *	Device Tag	Node Name: PCU-3	Address: N14:121/10	Scan Class: A
			Off Label: Off	On Label: On				
PCU-3\HS-3167B1	Digital	OCS OPEN VALVE SOV-3167B Y87-2	Alarmed: No	Security: *	Device Tag	Node Name: PCU-3	Address: N14:121/11	Scan Class: A
			Off Label: Off	On Label: On				
PCU-3\HS-3167B2	Digital	OCS CLOSE VALVE SOV-3167B Y87-2	Alarmed: No	Security: *	Device Tag	Node Name: PCU-3	Address: N14:121/12	Scan Class: A
			Off Label: Off	On Label: On				
PCU-3\HS-3168A1	Digital	OCS OPEN VALVE SOL-3168A Y81-3	Alarmed: No	Security: *	Device Tag	Node Name: PCU-3	Address: N14:120/10	Scan Class: A
			Off Label: Off	On Label: On				
PCU-3\HS-3168A2	Digital	OCS CLOSE VALVE SOL-3168A Y81-3	Alarmed: No	Security: *	Device Tag	Node Name: PCU-3	Address: N14:120/11	Scan Class: A
			Off Label: Off	On Label: On				
PCU-3\HS-3168B1	Digital	OCS OPEN VALVE SOL-3168B Y81-4	Alarmed: No	Security: *	Device Tag	Node Name: PCU-3	Address: N14:120/12	Scan Class: A
			Off Label: Off	On Label: On				
PCU-3\HS-3168B2	Digital	OCS CLOSE VALVE SOL-3168B Y81-4	Alarmed: No	Security: *	Device Tag	Node Name: PCU-3	Address: N14:120/13	Scan Class: A
			Off Label: Off	On Label: On				
PCU-3\HS-3185A1	Digital	OCS OPEN VALVE SOL-3185A Y81-1	Alarmed: No	Security: *	Device Tag	Node Name: PCU-3	Address: N14:120/6	Scan Class: A
			Off Label: Off	On Label: On				
PCU-3\HS-3185A2	Digital	OCS CLOSE VALVE SOL-3185A Y81-1	Alarmed: No	Security: *	Device Tag	Node Name: PCU-3	Address: N14:120/7	Scan Class: A
			Off Label: Off	On Label: On				
PCU-3\HS-3185B1	Digital	OCS OPEN VALVE SOL-3185B Y81-2	Alarmed: No	Security: *	Device Tag	Node Name: PCU-3	Address: N14:120/8	Scan Class: A
			Off Label: Off	On Label: On				
PCU-3\HS-3185B2	Digital	OCS CLOSE VALVE SOL-3185B Y81-2	Alarmed: No	Security: *	Device Tag	Node Name: PCU-3	Address: N14:120/9	Scan Class: A
			Off Label: Off	On Label: On				
PCU-3\HS_MD_CLEAR	Digital	TRANSFER MODE SELECT ENABLE	Alarmed: No	Security: *	Device Tag	Node Name: PCU-3	Address: N14:122/8	Scan Class: A
			Off Label: Off	On Label: On				
PCU-3\HS_MD_SL_101	Digital	SLURRY MODE TRANSFER FROM SY101 SELECT	Alarmed: No	Security: *	Device Tag	Node Name: PCU-3	Address: N14:122/11	Scan Class: A
			Off Label: Off	On Label: On				
PCU-3\HS_MD_SL_102	Digital	SLURRY MODE TRANSFER FROM SY102 SELECT	Alarmed: No	Security: *	Device Tag	Node Name: PCU-3	Address: N14:122/12	Scan Class: A
			Off Label: Off	On Label: On				
PCU-3\HS_MD_SU_101	Digital	SUPERNATE MODE TRANSFER FROM SY101 SELECT	Alarmed: No	Security: *	Device Tag	Node Name: PCU-3	Address: N14:122/9	Scan Class: A
			Off Label: Off	On Label: On				
PCU-3\HS_MD_SU_102	Digital	SUPERNATE MODE TRANSFER SELECT FROM SY102 SELECT	Alarmed: No	Security: *	Device Tag	Node Name: PCU-3	Address: N14:122/10	Scan Class: A
			Off Label: Off	On Label: On				
PCU-3\LDA-3151	Digital	LEAK DETECTED AT VENT STATION 6241-V SUMP Y-72.1	Alarmed: Yes	Security: *	Device Tag	Node Name: PCU-3	Address: N14:0/12	Scan Class: A
			Off Label: Off	On Label: On				
PCU-3\LDA-3151_ACK	Digital	LEAK DETECTED AT VENT STATION 6241-V SUMP Y-72.1 ACKNOWLEDGE	Alarmed: No	Security: *	Device Tag	Node Name: PCU-3	Address: N14:210/7	Scan Class: A
			Off Label: Off	On Label: On				
PCU-3\LDA-3161	Digital	6241-V ENCASEMENT LEAK DETECTION [OFF = ALARM] Y72	Alarmed: Yes	Security: *	Device Tag	Node Name: PCU-3	Address: N14:25/5	Scan Class: A
			Off Label: Off	On Label: On				

Tag Name	Tag Type	Description						
PCU-3\LDA-3161_ACK	Digital	6241-V ENCASEMENT LEAK DETECTION [OFF = ALARM] Y72 ACKNOWLEDGE	Alarmed: No	Security: *	Device Tag	Node Name: PCU-3	Address: N14:210/8	Scan Class: A
			Off Label: Off	On Label: On				
PCU-3\LDA-TR-LINE	Digital	TRANSFER LINE LEAK DETECTED Y-72.1 (COMBINED ALARM)	Alarmed: No	Security: *	Device Tag	Node Name: PCU-3	Address: N14:0/11	Scan Class: A
			Off Label: Off	On Label: On				
PCU-3\LDAH-3151	Digital	6241-V SUMP LEAK DETECTION Y72	Alarmed: No	Security: *	Device Tag	Node Name: PCU-3	Address: N14:25/13	Scan Class: A
			Off Label: Off	On Label: On				
PCU-3\LDXA-3151	Digital	SUMP LEAK DETECTOR Y72	Alarmed: No	Security: *	Device Tag	Node Name: PCU-3	Address: N14:25/4	Scan Class: A
			Off Label: Off	On Label: On				
PCU-3\MD_SEL_ENAB	Digital	NEW TRANSFER MODE SELECTION ENABLED ON OIT	Alarmed: No	Security: *	Device Tag	Node Name: PCU-3	Address: N14:3/8	Scan Class: A
			Off Label: Off	On Label: On				
PCU-3\MD_SL_101	Digital	SLURRY MODE TRANSFER FROM SY101 SELECTED	Alarmed: No	Security: *	Device Tag	Node Name: PCU-3	Address: N14:3/11	Scan Class: A
			Off Label: Off	On Label: On				
PCU-3\MD_SL_102	Digital	SLURRY MODE TRANSFER FROM SY102 SELECTED	Alarmed: No	Security: *	Device Tag	Node Name: PCU-3	Address: N14:3/12	Scan Class: A
			Off Label: Off	On Label: On				
PCU-3\MD_SU_101	Digital	SUPERNATE MOVE TRANSFER FROM SY101 SELECTED	Alarmed: No	Security: *	Device Tag	Node Name: PCU-3	Address: N14:3/9	Scan Class: A
			Off Label: Off	On Label: On				
PCU-3\MD_SU_102	Digital	SUPERNATE MODE TRANSFER FROM SY102 SELECTED	Alarmed: No	Security: *	Device Tag	Node Name: PCU-3	Address: N14:3/10	Scan Class: A
			Off Label: Off	On Label: On				
PCU-3\P-3116-SD	Digital	SHUTDOWN SUMP PUMP P-3116 Y-82.1	Alarmed: No	Security: *	Device Tag	Node Name: PCU-3	Address: N14:29/2	Scan Class: A
			Off Label: Off	On Label: On				
PCU-3\PAH-3126A	Digital	SUPERNATE LINE HIGH PRESSURE FAILURE	Alarmed: Yes	Security: *	Device Tag	Node Name: PCU-3	Address: N14:0/10	Scan Class: A
			Off Label: Off	On Label: On				
PCU-3\PAH-3126A_ACK	Digital	SUPERNATE LINE HIGH PRESSURE FAILURE ACKNOWLEDGE	Alarmed: No	Security: *	Device Tag	Node Name: PCU-3	Address: N14:210/10	Scan Class: A
			Off Label: Off	On Label: On				
PCU-3\PAH-3167	Digital	VALVE SOV-3167A/B FAILURE Y73	Alarmed: Yes	Security: *	Device Tag	Node Name: PCU-3	Address: N14:0/13	Scan Class: A
			Off Label: Off	On Label: On				
PCU-3\PAH-3167_ACK	Digital	VALVE SOV-3167A/B FAILURE Y73 ACKNOWLEDGE	Alarmed: No	Security: *	Device Tag	Node Name: PCU-3	Address: N14:210/11	Scan Class: A
			Off Label: Off	On Label: On				
PCU-3\PAH-3168	Digital	VALVE SOV-3168A/B FAILURE Y73	Alarmed: Yes	Security: *	Device Tag	Node Name: PCU-3	Address: N14:0/14	Scan Class: A
			Off Label: Off	On Label: On				
PCU-3\PAH-3168_ACK	Digital	VALVE SOV-3168A/B FAILURE Y73 ACKNOWLEDGE	Alarmed: No	Security: *	Device Tag	Node Name: PCU-3	Address: N14:210/12	Scan Class: A
			Off Label: Off	On Label: On				
PCU-3\PAH-3185	Digital	VALVE SOV-3185A/B FAILURE Y73	Alarmed: Yes	Security: *	Device Tag	Node Name: PCU-3	Address: N14:0/15	Scan Class: A
			Off Label: Off	On Label: On				
PCU-3\PAH-3185_ACK	Digital	VALVE SOV-3185A/B FAILURE Y73 ACKNOWLEDGE	Alarmed: No	Security: *	Device Tag	Node Name: PCU-3	Address: N14:210/13	Scan Class: A
			Off Label: Off	On Label: On				

Tag Name	Tag Type	Description						
PCU-3\PAHW-3126 A	Digital	SUPERNATE LINE HIGH PRESSURE WARNING	Alarmed: Yes	Security: *	Device Tag	Node Name: PCU-3	Address: N14:0/9	Scan Class: A
			Off Label: Off	On Label: On				
PCU-3\PAHW-3126 A_ACK	Digital	SUPERNATE LINE HIGH PRESSURE WARNING ACKNOWLEDGE	Alarmed: No	Security: *	Device Tag	Node Name: PCU-3	Address: N14:210/9	Scan Class: A
			Off Label: Off	On Label: On				
PCU-3\PAL-3100B	Digital	LOW COMPRESSOR SA-CMP-3101B PRESSURE	Alarmed: Yes	Security: *	Device Tag	Node Name: PCU-3	Address: N14:25/12	Scan Class: A
			Off Label: Off	On Label: On				
PCU-3\PAL-3100B_ ACK	Digital	LOW COMPRESSOR SA-CMP-3101B PRESSURE ACKNOWLEDGE	Alarmed: No	Security: *	Device Tag	Node Name: PCU-3	Address: N14:210/14	Scan Class: A
			Off Label: Off	On Label: On				
PCU-3\PCU3-SP-AI -6	Analog	SPARE ANALOG INPUT	Alarmed: No	Security: *	Device Tag	Node Name: PCU-3	Address: N14:43	Scan Class: A
			Minimum : 0	Maximum : 32768	Scale : 1	Offset : 0	Units:	Data Type: Integer
PCU-3\PCU3-SP-AI -6_A	Digital	PCU-3 INPUT ANALOG OVER OR UNDER RANGE ALARM	Alarmed: No	Security: *	Device Tag	Node Name: PCU-3	Address: N14:12/13	Scan Class: A
			Off Label: Off	On Label: On				
PCU-3\PCU3-SP-AI -7	Analog	SPARE ANALOG INPUT	Alarmed: No	Security: *	Device Tag	Node Name: PCU-3	Address: N14:44	Scan Class: A
			Minimum : 0	Maximum : 32768	Scale : 1	Offset : 0	Units:	Data Type: Integer
PCU-3\PCU3-SP-AI -7_A	Digital	PCU-3 INPUT ANALOG OVER OR UNDER RANGE ALARM	Alarmed: No	Security: *	Device Tag	Node Name: PCU-3	Address: N14:12/14	Scan Class: A
			Off Label: Off	On Label: On				
PCU-3\PCU3-SP-AI -8	Analog	SPARE ANALOG INPUT	Alarmed: No	Security: *	Device Tag	Node Name: PCU-3	Address: N14:45	Scan Class: A
			Minimum : 0	Maximum : 32768	Scale : 1	Offset : 0	Units:	Data Type: Integer
PCU-3\PCU3-SP-AI -8_A	Digital	PCU-3 INPUT ANALOG OVER OR UNDER RANGE ALARM	Alarmed: No	Security: *	Device Tag	Node Name: PCU-3	Address: N14:12/15	Scan Class: A
			Off Label: Off	On Label: On				
PCU-3\PCU3-SP-I4 -16	Digital	SPARE DIGITAL INPUT	Alarmed: No	Security: *	Device Tag	Node Name: PCU-3	Address: N14:25/14	Scan Class: A
			Off Label: Off	On Label: On				
PCU-3\PCU3-SP-I4 -17	Digital	SPARE DIGITAL INPUT	Alarmed: No	Security: *	Device Tag	Node Name: PCU-3	Address: N14:25/15	Scan Class: A
			Off Label: Off	On Label: On				
PCU-3\PCU3-SP-I4 -2	Digital	SPARE DIGITAL INPUT	Alarmed: No	Security: *	Device Tag	Node Name: PCU-3	Address: N14:25/2	Scan Class: A
			Off Label: Off	On Label: On				
PCU-3\PCU3-SP-I4 -3	Digital	SPARE DIGITAL INPUT	Alarmed: No	Security: *	Device Tag	Node Name: PCU-3	Address: N14:25/3	Scan Class: A
			Off Label: Off	On Label: On				
PCU-3\PCU3-SP-O 7-05	Digital	SPARE DIGITAL OUTPUT	Alarmed: No	Security: *	Device Tag	Node Name: PCU-3	Address: N14:29/5	Scan Class: A
			Off Label: Off	On Label: On				
PCU-3\PCU3-SP-O 7-06	Digital	SPARE DIGITAL OUTPUT	Alarmed: No	Security: *	Device Tag	Node Name: PCU-3	Address: N14:29/6	Scan Class: A
			Off Label: Off	On Label: On				
PCU-3\PCU3-SP-O 7-07	Digital	SPARE DIGITAL OUTPUT	Alarmed: No	Security: *	Device Tag	Node Name: PCU-3	Address: N14:29/7	Scan Class: A
			Off Label: Off	On Label: On				
PCU-3\PCU3-SP-O 7-10	Digital	SPARE DIGITAL OUTPUT	Alarmed: No	Security: *	Device Tag	Node Name: PCU-3	Address: N14:29/8	Scan Class: A
			Off Label: Off	On Label: On				
PCU-3\PCU3-SP-O 7-11	Digital	SPARE DIGITAL OUTPUT	Alarmed: No	Security: *	Device Tag	Node Name: PCU-3	Address: N14:29/9	Scan Class: A
			Off Label: Off	On Label: On				
PCU-3\PCU3-SP-O 7-12	Digital	SPARE DIGITAL OUTPUT	Alarmed: No	Security: *	Device Tag	Node Name: PCU-3	Address: N14:29/10	Scan Class: A
			Off Label: Off	On Label: On				
PCU-3\PCU3-SP-O 7-13	Digital	SPARE DIGITAL OUTPUT	Alarmed: No	Security: *	Device Tag	Node Name: PCU-3	Address: N14:29/11	Scan Class: A
			Off Label: Off	On Label: On				

Tag Name	Tag Type	Description						
PCU-3\PCU3-SP-O7-14	Digital	SPARE DIGITAL OUTPUT	Alarmed: No	Security: *	Device Tag	Node Name: PCU-3	Address: N14:29/12	Scan Class: A
			Off Label: Off	On Label: On				
PCU-3\PCU3-SP-O7-15	Digital	SPARE DIGITAL OUTPUT	Alarmed: No	Security: *	Device Tag	Node Name: PCU-3	Address: N14:29/13	Scan Class: A
			Off Label: Off	On Label: On				
PCU-3\PCU3-SP-O7-16	Digital	SPARE DIGITAL OUTPUT	Alarmed: No	Security: *	Device Tag	Node Name: PCU-3	Address: N14:29/14	Scan Class: A
			Off Label: Off	On Label: On				
PCU-3\PCU3-SP-O7-17	Digital	SPARE DIGITAL OUTPUT	Alarmed: No	Security: *	Device Tag	Node Name: PCU-3	Address: N14:29/15	Scan Class: A
			Off Label: Off	On Label: On				
PCU-3\PCU3-SP-TI-2	Analog	SPARE THERMOCOUPLE INPUT	Alarmed: No	Security: *	Device Tag	Node Name: PCU-3	Address: N14:31	Scan Class: A
			Minimum : 0	Maximum : 32768	Scale : 1	Offset : 0	Units:	Data Type: Integer
PCU-3\PCU3-SP-TI-2_A	Digital	PCU-3 INPUT THERMOCOUPLE OVER OR UNDER RANGE ALARM	Alarmed: No	Security: *	Device Tag	Node Name: PCU-3	Address: N14:11/1	Scan Class: A
			Off Label: Off	On Label: On				
PCU-3\PCU3-SP-TI-4	Analog	SPARE THERMOCOUPLE INPUT	Alarmed: No	Security: *	Device Tag	Node Name: PCU-3	Address: N14:33	Scan Class: A
			Minimum : 0	Maximum : 32768	Scale : 1	Offset : 0	Units:	Data Type: Integer
PCU-3\PCU3-SP-TI-4_A	Digital	PCU-3 INPUT THERMOCOUPLE OVER OR UNDER RANGE ALARM	Alarmed: No	Security: *	Device Tag	Node Name: PCU-3	Address: N14:11/3	Scan Class: A
			Off Label: Off	On Label: On				
PCU-3\PCU3-SP-TI-5	Analog	SPARE THERMOCOUPLE INPUT	Alarmed: No	Security: *	Device Tag	Node Name: PCU-3	Address: N14:34	Scan Class: A
			Minimum : 0	Maximum : 32768	Scale : 1	Offset : 0	Units:	Data Type: Integer
PCU-3\PCU3-SP-TI-5_A	Digital	PCU-3 INPUT THERMOCOUPLE OVER OR UNDER RANGE ALARM	Alarmed: No	Security: *	Device Tag	Node Name: PCU-3	Address: N14:11/4	Scan Class: A
			Off Label: Off	On Label: On				
PCU-3\PCU3-SP-TI-6	Analog	SPARE THERMOCOUPLE INPUT	Alarmed: No	Security: *	Device Tag	Node Name: PCU-3	Address: N14:35	Scan Class: A
			Minimum : 0	Maximum : 32768	Scale : 1	Offset : 0	Units:	Data Type: Integer
PCU-3\PCU3-SP-TI-6_A	Digital	PCU-3 INPUT THERMOCOUPLE OVER OR UNDER RANGE ALARM	Alarmed: No	Security: *	Device Tag	Node Name: PCU-3	Address: N14:11/5	Scan Class: A
			Off Label: Off	On Label: On				
PCU-3\PCU3-SP-TI-7	Analog	SPARE THERMOCOUPLE INPUT	Alarmed: No	Security: *	Device Tag	Node Name: PCU-3	Address: N14:36	Scan Class: A
			Minimum : 0	Maximum : 32768	Scale : 1	Offset : 0	Units:	Data Type: Integer
PCU-3\PCU3-SP-TI-7_A	Digital	PCU-3 INPUT THERMOCOUPLE OVER OR UNDER RANGE ALARM	Alarmed: No	Security: *	Device Tag	Node Name: PCU-3	Address: N14:11/6	Scan Class: A
			Off Label: Off	On Label: On				
PCU-3\PCU3-SP-TI-8	Analog	SPARE THERMOCOUPLE INPUT	Alarmed: No	Security: *	Device Tag	Node Name: PCU-3	Address: N14:37	Scan Class: A
			Minimum : 0	Maximum : 32768	Scale : 1	Offset : 0	Units:	Data Type: Integer
PCU-3\PCU3-SP-TI-8_A	Digital	PCU-3 INPUT THERMOCOUPLE OVER OR UNDER RANGE ALARM	Alarmed: No	Security: *	Device Tag	Node Name: PCU-3	Address: N14:11/7	Scan Class: A
			Off Label: Off	On Label: On				
PCU-3\PI-3126A	Analog	LOSS OF VACUUM WT-SNL-3150	Alarmed: No	Security: *	Device Tag	Node Name: PCU-3	Address: N14:38	Scan Class: A
			Minimum : 0	Maximum : 300	Scale : 1	Offset : 0	Units: PSIG	Data Type: Integer
PCU-3\PI-3126A_A	Digital	PCU-3 INPUT ANALOG OVER OR UNDER RANGE ALARM	Alarmed: Yes	Security: *	Device Tag	Node Name: PCU-3	Address: N14:12/8	Scan Class: A
			Off Label: Off	On Label: On				
PCU-3\PI-3126A_A_ACK	Digital	PCU-3 INPUT ANALOG OVER OR UNDER RANGE ALARM ACKNOWLEDGE	Alarmed: No	Security: *	Device Tag	Node Name: PCU-3	Address: N14:210/15	Scan Class: A
			Off Label: Off	On Label: On				

Tag Name	Tag Type	Description						
PCU-3\PI-3126B	Analog	LOSS OF VACUUM WT-SLL-3160	Alarmed: No	Security: *	Device Tag	Node Name: PCU-3	Address: N14:39	Scan Class: A
			Minimum : 0	Maximum : 1000	Scale : 1	Offset : 0	Units: PSIG	Data Type: Integer
PCU-3\PI-3126B_A	Digital	PCU-3 INPUT ANALOG OVER OR UNDER RANGE ALARM	Alarmed: Yes	Security: *	Device Tag	Node Name: PCU-3	Address: N14:12/9	Scan Class: A
			Off Label: Off	On Label: On				
PCU-3\PI-3126B_A_ACK	Digital	PCU-3 INPUT ANALOG OVER OR UNDER RANGE ALARM ACKNOWLEDGE	Alarmed: No	Security: *	Device Tag	Node Name: PCU-3	Address: N14:211/0	Scan Class: A
			Off Label: Off	On Label: On				
PCU-3\PI-3167	Analog	VALVE SOV-3167A/B PRESSURE	Alarmed: No	Security: *	Device Tag	Node Name: PCU-3	Address: N14:40	Scan Class: A
			Minimum : 0	Maximum : 100	Scale : 1	Offset : 0	Units: PSIG	Data Type: Integer
PCU-3\PI-3167_A	Digital	PCU-3 INPUT ANALOG OVER OR UNDER RANGE ALARM	Alarmed: Yes	Security: *	Device Tag	Node Name: PCU-3	Address: N14:12/10	Scan Class: A
			Off Label: Off	On Label: On				
PCU-3\PI-3167_A_ACK	Digital	PCU-3 INPUT ANALOG OVER OR UNDER RANGE ALARM ACKNOWLEDGE	Alarmed: No	Security: *	Device Tag	Node Name: PCU-3	Address: N14:211/1	Scan Class: A
			Off Label: Off	On Label: On				
PCU-3\PI-3168	Analog	VALVE SOV-3168A/B PRESSURE	Alarmed: No	Security: *	Device Tag	Node Name: PCU-3	Address: N14:41	Scan Class: A
			Minimum : 0	Maximum : 1000	Scale : 1	Offset : 0	Units: PSIG	Data Type: Integer
PCU-3\PI-3168_A	Digital	PCU-3 INPUT ANALOG OVER OR UNDER RANGE ALARM	Alarmed: Yes	Security: *	Device Tag	Node Name: PCU-3	Address: N14:12/11	Scan Class: A
			Off Label: Off	On Label: On				
PCU-3\PI-3168_A_ACK	Digital	PCU-3 INPUT ANALOG OVER OR UNDER RANGE ALARM ACKNOWLEDGE	Alarmed: No	Security: *	Device Tag	Node Name: PCU-3	Address: N14:211/2	Scan Class: A
			Off Label: Off	On Label: On				
PCU-3\PI-3185	Analog	VALVE SOV-3185A/B PRESSURE	Alarmed: No	Security: *	Device Tag	Node Name: PCU-3	Address: N14:42	Scan Class: A
			Minimum : 0	Maximum : 100	Scale : 1	Offset : 0	Units: PSIG	Data Type: Integer
PCU-3\PI-3185_A	Digital	PCU-3 INPUT ANALOG OVER OR UNDER RANGE ALARM	Alarmed: Yes	Security: *	Device Tag	Node Name: PCU-3	Address: N14:12/12	Scan Class: A
			Off Label: Off	On Label: On				
PCU-3\PI-3185_A_ACK	Digital	PCU-3 INPUT ANALOG OVER OR UNDER RANGE ALARM ACKNOWLEDGE	Alarmed: No	Security: *	Device Tag	Node Name: PCU-3	Address: N14:211/3	Scan Class: A
			Off Label: Off	On Label: On				
PCU-3\SOV-3165A 1	Digital	OPEN VALVE SOV-3165A Y71	Alarmed: No	Security: *	Device Tag	Node Name: PCU-3	Address: N14:28/0	Scan Class: A
			Off Label: Off	On Label: On				
PCU-3\SOV-3165A 2	Digital	CLOSE VALVE SOV-3165A Y71	Alarmed: No	Security: *	Device Tag	Node Name: PCU-3	Address: N14:28/1	Scan Class: A
			Off Label: Off	On Label: On				
PCU-3\SOV-3165B 1	Digital	OPEN VALVE SOV-3165B Y71	Alarmed: No	Security: *	Device Tag	Node Name: PCU-3	Address: N14:28/2	Scan Class: A
			Off Label: Off	On Label: On				
PCU-3\SOV-3165B 2	Digital	CLOSE VALVE SOV-3165B Y71	Alarmed: No	Security: *	Device Tag	Node Name: PCU-3	Address: N14:28/3	Scan Class: A
			Off Label: Off	On Label: On				
PCU-3\SOV-3166A 1	Digital	OPEN VALVE SOV-3166A Y71	Alarmed: No	Security: *	Device Tag	Node Name: PCU-3	Address: N14:28/4	Scan Class: A
			Off Label: Off	On Label: On				
PCU-3\SOV-3166A 2	Digital	CLOSE VALVE SOV-3166A Y71	Alarmed: No	Security: *	Device Tag	Node Name: PCU-3	Address: N14:28/5	Scan Class: A
			Off Label: Off	On Label: On				
PCU-3\SOV-3166B 1	Digital	OPEN VALVE SOV-3166B Y71	Alarmed: No	Security: *	Device Tag	Node Name: PCU-3	Address: N14:28/6	Scan Class: A
			Off Label: Off	On Label: On				

Tag Name	Tag Type	Description						
PCU-3\SOV-3166B 2	Digital	CLOSE VALVE SOV-3166B Y88-1	Alarmed: No	Security: *	Device Tag	Node Name: PCU-3	Address: N14:28/7	Scan Class: A
			Off Label: Off	On Label: On				
PCU-3\SOV-3167A 1	Digital	OPEN VALVE SOV-3167A Y88-1	Alarmed: No	Security: *	Device Tag	Node Name: PCU-3	Address: N14:28/8	Scan Class: A
			Off Label: Off	On Label: On				
PCU-3\SOV-3167A 2	Digital	CLOSE VALVE SOV-3167A Y81-3	Alarmed: No	Security: *	Device Tag	Node Name: PCU-3	Address: N14:28/9	Scan Class: A
			Off Label: Off	On Label: On				
PCU-3\SOV-3167B 1	Digital	OPEN VALVE SOV-3167B Y88-1	Alarmed: No	Security: *	Device Tag	Node Name: PCU-3	Address: N14:29/3	Scan Class: A
			Off Label: Off	On Label: On				
PCU-3\SOV-3167B 2	Digital	CLOSE VALVE SOV-3167B Y88-1	Alarmed: No	Security: *	Device Tag	Node Name: PCU-3	Address: N14:29/4	Scan Class: A
			Off Label: Off	On Label: On				
PCU-3\SOV-3168A 1	Digital	OPEN VALVE SOV-3168A Y81-3	Alarmed: No	Security: *	Device Tag	Node Name: PCU-3	Address: N14:28/10	Scan Class: A
			Off Label: Off	On Label: On				
PCU-3\SOV-3168A 2	Digital	CLOSE VALVE SOV-3168A Y81-4	Alarmed: No	Security: *	Device Tag	Node Name: PCU-3	Address: N14:28/11	Scan Class: A
			Off Label: Off	On Label: On				
PCU-3\SOV-3168B 1	Digital	OPEN VALVE SOV-3168B Y81-4	Alarmed: No	Security: *	Device Tag	Node Name: PCU-3	Address: N14:28/12	Scan Class: A
			Off Label: Off	On Label: On				
PCU-3\SOV-3168B 2	Digital	CLOSE VALVE SOV-3168B Y81-1	Alarmed: No	Security: *	Device Tag	Node Name: PCU-3	Address: N14:28/13	Scan Class: A
			Off Label: Off	On Label: On				
PCU-3\SOV-3185A 1	Digital	OPEN VALVE SOV-3185A Y81-1	Alarmed: No	Security: *	Device Tag	Node Name: PCU-3	Address: N14:28/14	Scan Class: A
			Off Label: Off	On Label: On				
PCU-3\SOV-3185A 2	Digital	CLOSE VALVE SOV-3185A	Alarmed: No	Security: *	Device Tag	Node Name: PCU-3	Address: N14:28/15	Scan Class: A
			Off Label: Off	On Label: On				
PCU-3\SOV-3185B 1	Digital	OPEN VALVE SOV-3185B Y81-2	Alarmed: No	Security: *	Device Tag	Node Name: PCU-3	Address: N14:29/0	Scan Class: A
			Off Label: Off	On Label: On				
PCU-3\SOV-3185B 2	Digital	CLOSE VALVE SOV-3185B Y81-2	Alarmed: No	Security: *	Device Tag	Node Name: PCU-3	Address: N14:29/1	Scan Class: A
			Off Label: Off	On Label: On				
PCU-3\TAH_CAB_PLC3	Digital	PLC-3 CABINET HIGH TEMPERATURE [OFF = ALARM]	Alarmed: Yes	Security: *	Device Tag	Node Name: PCU-3	Address: N14:25/2	Scan Class: A
			Off Label: Off	On Label: On				
PCU-3\TAH_CAB_PLC3_ACK	Digital	PLC-3 CABINET HIGH TEMPERATURE ACKNOWLEDGE	Alarmed: No	Security: *	Device Tag	Node Name: PCU-3	Address: N14:213/8	Scan Class: A
			Off Label: Off	On Label: On				
PCU-3\TI-3126A	Analog	LINE WT-SNL-3150 TEMPERATURE	Alarmed: No	Security: *	Device Tag	Node Name: PCU-3	Address: N14:30	Scan Class: A
			Minimum : 35	Maximum : 200	Scale : 1	Offset : 0	Units: DEG F	Data Type: Integer
PCU-3\TI-3126A_A	Digital	PCU-3 INPUT THERMOCOUPLE OVER OR UNDER RANGE ALARM	Alarmed: Yes	Security: *	Device Tag	Node Name: PCU-3	Address: N14:11/0	Scan Class: A
			Off Label: Off	On Label: On				
PCU-3\TI-3126A_A_ACK	Digital	PCU-3 INPUT THERMOCOUPLE OVER OR UNDER RANGE ALARM ACKNOWLEDGE	Alarmed: No	Security: *	Device Tag	Node Name: PCU-3	Address: N14:211/4	Scan Class: A
			Off Label: Off	On Label: On				
PCU-3\TI-3126B	Analog	LINE WT-SLL-3160 TEMPERATURE	Alarmed: No	Security: *	Device Tag	Node Name: PCU-3	Address: N14:32	Scan Class: A
			Minimum : 35	Maximum : 200	Scale : 1	Offset : 0	Units: DEG F	Data Type: Integer
PCU-3\TI-3126B_A	Digital	PCU-3 INPUT THERMOCOUPLE OVER OR UNDER RANGE ALARM	Alarmed: Yes	Security: *	Device Tag	Node Name: PCU-3	Address: N14:11/2	Scan Class: A
			Off Label: Off	On Label: On				
PCU-3\TI-3126B_A_ACK	Digital	PCU-3 INPUT THERMOCOUPLE OVER OR UNDER RANGE ALARM ACKNOWLEDGE	Alarmed: No	Security: *	Device Tag	Node Name: PCU-3	Address: N14:211/5	Scan Class: A
			Off Label: Off	On Label: On				

Tag Name	Tag Type	Description						
PCU-3\TR_EN_1001	Digital	ENABLE TRANSFER 1 241-SY-A TO 241-A-B Y-70.1	Alarmed: No Off Label: Off	Security: * On Label: On	Device Tag	Node Name: PCU-3	Address: N14:3/4	Scan Class: A
PCU-3\TR_EN_1002A	Digital	ENABLE TRANSFER 2A 241-SY-B TO 241-A-A Y-70.1	Alarmed: No Off Label: Off	Security: * On Label: On	Device Tag	Node Name: PCU-3	Address: N14:3/5	Scan Class: A
PCU-3\TR_EN_1002B	Digital	ENABLE TRANSFER 2B 241-SY-B TO 241-A-A Y-70.1	Alarmed: No Off Label: Off	Security: * On Label: On	Device Tag	Node Name: PCU-3	Address: N14:3/6	Scan Class: A
PCU-3\TR_EN_1003	Digital	ENABLE TRANSFER 3 241-A-B TO 241-SY-A Y-70.1	Alarmed: No Off Label: Off	Security: * On Label: On	Device Tag	Node Name: PCU-3	Address: N14:3/7	Scan Class: A
PCU-3\TR_ON_1001	Digital	TRANSFER 1 INITIATED Y-41.1	Alarmed: No Off Label: Off	Security: * On Label: On	Device Tag	Node Name: PCU-3	Address: N14:3/0	Scan Class: A
PCU-3\TR_ON_1002A	Digital	TRANSFER 2A INITIATED Y-42.1	Alarmed: No Off Label: Off	Security: * On Label: On	Device Tag	Node Name: PCU-3	Address: N14:3/1	Scan Class: A
PCU-3\TR_ON_1002B	Digital	TRANSFER 2B INITIATED Y-43.1	Alarmed: No Off Label: Off	Security: * On Label: On	Device Tag	Node Name: PCU-3	Address: N14:3/2	Scan Class: A
PCU-3\TR_ON_1003	Digital	TRANSFER 3 INITIATED Y-44.1	Alarmed: No Off Label: Off	Security: * On Label: On	Device Tag	Node Name: PCU-3	Address: N14:3/3	Scan Class: A
PCU-3\YA-3102A	Digital	ENCASEMENT RUPTURE DISK ACTIVATED [OFF = ALARM] OIT	Alarmed: Yes Off Label: Off	Security: * On Label: On	Device Tag	Node Name: PCU-3	Address: N14:25/6	Scan Class: A
PCU-3\YA-3102A_ACK	Digital	ENCASEMENT RUPTURE DISK ACTIVATED [OFF = ALARM] OIT ACKNOWLEDGE	Alarmed: No Off Label: Off	Security: * On Label: On	Device Tag	Node Name: PCU-3	Address: N14:211/6	Scan Class: A
PCU-3\YA-3102B	Digital	ENCASEMENT RUPTURE DISK ACTIVATED [OFF = ALARM] OIT	Alarmed: Yes Off Label: Off	Security: * On Label: On	Device Tag	Node Name: PCU-3	Address: N14:25/7	Scan Class: A
PCU-3\YA-3102B_ACK	Digital	ENCASEMENT RUPTURE DISK ACTIVATED [OFF = ALARM] OIT ACKNOWLEDGE	Alarmed: No Off Label: Off	Security: * On Label: On	Device Tag	Node Name: PCU-3	Address: N14:211/7	Scan Class: A
PCU-3\YA-3102C	Digital	ENCASEMENT RUPTURE DISK ACTIVATED [OFF = ALARM] OIT	Alarmed: Yes Off Label: Off	Security: * On Label: On	Device Tag	Node Name: PCU-3	Address: N14:25/8	Scan Class: A
PCU-3\YA-3102C_ACK	Digital	ENCASEMENT RUPTURE DISK ACTIVATED [OFF = ALARM] OIT ACKNOWLEDGE	Alarmed: No Off Label: Off	Security: * On Label: On	Device Tag	Node Name: PCU-3	Address: N14:211/8	Scan Class: A
PCU-3\YA-3102D	Digital	ENCASEMENT RUPTURE DISK ACTIVATED [OFF = ALARM] OIT	Alarmed: Yes Off Label: Off	Security: * On Label: On	Device Tag	Node Name: PCU-3	Address: N14:25/9	Scan Class: A
PCU-3\YA-3102D_ACK	Digital	ENCASEMENT RUPTURE DISK ACTIVATED [OFF = ALARM] OIT ACKNOWLEDGE	Alarmed: No Off Label: Off	Security: * On Label: On	Device Tag	Node Name: PCU-3	Address: N14:211/9	Scan Class: A
PCU-3\ZA-3165A	Digital	VALVE POSITION SWITCH FAILURE Y71	Alarmed: Yes Off Label: Off	Security: * On Label: On	Device Tag	Node Name: PCU-3	Address: N14:1/2	Scan Class: A

Tag Name	Tag Type	Description						
PCU-3\ZA-3165A1	Digital	VALVE FAILED TO OPEN Y71	Alarmed: Yes	Security: *	Device Tag	Node Name: PCU-3	Address: N14:1/0	Scan Class: A
			Off Label: Off	On Label: On				
PCU-3\ZA-3165A1_ACK	Digital	VALVE FAILED TO OPEN Y71 ACKNOWLEDGE	Alarmed: No	Security: *	Device Tag	Node Name: PCU-3	Address: N14:211/10	Scan Class: A
			Off Label: Off	On Label: On				
PCU-3\ZA-3165A2	Digital	VALVE FAILED TO CLOSE Y71	Alarmed: Yes	Security: *	Device Tag	Node Name: PCU-3	Address: N14:1/1	Scan Class: A
			Off Label: Off	On Label: On				
PCU-3\ZA-3165A2_ACK	Digital	VALVE FAILED TO CLOSE Y71 ACKNOWLEDGE	Alarmed: No	Security: *	Device Tag	Node Name: PCU-3	Address: N14:211/11	Scan Class: A
			Off Label: Off	On Label: On				
PCU-3\ZA-3165A_ACK	Digital	VALVE POSITION SWITCH FAILURE Y71 ACKNOWLEDGE	Alarmed: No	Security: *	Device Tag	Node Name: PCU-3	Address: N14:211/12	Scan Class: A
			Off Label: Off	On Label: On				
PCU-3\ZA-3165B	Digital	VALVE POSITION SWITCH FAILURE Y71	Alarmed: Yes	Security: *	Device Tag	Node Name: PCU-3	Address: N14:1/5	Scan Class: A
			Off Label: Off	On Label: On				
PCU-3\ZA-3165B1	Digital	VALVE FAILED TO OPEN Y71	Alarmed: Yes	Security: *	Device Tag	Node Name: PCU-3	Address: N14:1/3	Scan Class: A
			Off Label: Off	On Label: On				
PCU-3\ZA-3165B1_ACK	Digital	VALVE FAILED TO OPEN Y71 ACKNOWLEDGE	Alarmed: No	Security: *	Device Tag	Node Name: PCU-3	Address: N14:211/13	Scan Class: A
			Off Label: Off	On Label: On				
PCU-3\ZA-3165B2	Digital	VALVE FAILED TO CLOSE Y71	Alarmed: Yes	Security: *	Device Tag	Node Name: PCU-3	Address: N14:1/4	Scan Class: A
			Off Label: Off	On Label: On				
PCU-3\ZA-3165B2_ACK	Digital	VALVE FAILED TO CLOSE Y71 ACKNOWLEDGE	Alarmed: No	Security: *	Device Tag	Node Name: PCU-3	Address: N14:211/14	Scan Class: A
			Off Label: Off	On Label: On				
PCU-3\ZA-3165B_ACK	Digital	VALVE POSITION SWITCH FAILURE Y71 ACKNOWLEDGE	Alarmed: No	Security: *	Device Tag	Node Name: PCU-3	Address: N14:211/15	Scan Class: A
			Off Label: Off	On Label: On				
PCU-3\ZA-3166A	Digital	VALVE POSITION SWITCH FAILURE Y71	Alarmed: Yes	Security: *	Device Tag	Node Name: PCU-3	Address: N14:1/8	Scan Class: A
			Off Label: Off	On Label: On				
PCU-3\ZA-3166A1	Digital	VALVE FAILED TO OPEN Y71	Alarmed: Yes	Security: *	Device Tag	Node Name: PCU-3	Address: N14:1/6	Scan Class: A
			Off Label: Off	On Label: On				
PCU-3\ZA-3166A1_ACK	Digital	VALVE FAILED TO OPEN Y71 ACKNOWLEDGE	Alarmed: No	Security: *	Device Tag	Node Name: PCU-3	Address: N14:212/0	Scan Class: A
			Off Label: Off	On Label: On				
PCU-3\ZA-3166A2	Digital	VALVE FAILED TO CLOSE Y71	Alarmed: Yes	Security: *	Device Tag	Node Name: PCU-3	Address: N14:1/7	Scan Class: A
			Off Label: Off	On Label: On				
PCU-3\ZA-3166A2_ACK	Digital	VALVE FAILED TO CLOSE Y71 ACKNOWLEDGE	Alarmed: No	Security: *	Device Tag	Node Name: PCU-3	Address: N14:212/1	Scan Class: A
			Off Label: Off	On Label: On				
PCU-3\ZA-3166A_ACK	Digital	VALVE POSITION SWITCH FAILURE Y71 ACKNOWLEDGE	Alarmed: No	Security: *	Device Tag	Node Name: PCU-3	Address: N14:212/2	Scan Class: A
			Off Label: Off	On Label: On				
PCU-3\ZA-3166B	Digital	VALVE POSITION SWITCH FAILURE Y71	Alarmed: Yes	Security: *	Device Tag	Node Name: PCU-3	Address: N14:1/11	Scan Class: A
			Off Label: Off	On Label: On				
PCU-3\ZA-3166B1	Digital	VALVE FAILED TO OPEN Y71	Alarmed: Yes	Security: *	Device Tag	Node Name: PCU-3	Address: N14:1/9	Scan Class: A
			Off Label: Off	On Label: On				
PCU-3\ZA-3166B1_ACK	Digital	VALVE FAILED TO OPEN Y71 ACKNOWLEDGE	Alarmed: No	Security: *	Device Tag	Node Name: PCU-3	Address: N14:212/3	Scan Class: A
			Off Label: Off	On Label: On				
PCU-3\ZA-3166B2	Digital	VALVE FAILED TO CLOSE Y71	Alarmed: Yes	Security: *	Device Tag	Node Name: PCU-3	Address: N14:1/10	Scan Class: A
			Off Label: Off	On Label: On				

Tag Name	Tag Type	Description						
PCU-3\ZA-3166B2_ACK	Digital	VALVE FAILED TO CLOSE Y71 ACKNOWLEDGE	Alarmed: No	Security: *	Device Tag	Node Name: PCU-3	Address: N14:212/4	Scan Class: A
			Off Label: Off	On Label: On				
PCU-3\ZA-3166B_ACK	Digital	VALVE POSITION SWITCH FAILURE Y71 ACKNOWLEDGE	Alarmed: No	Security: *	Device Tag	Node Name: PCU-3	Address: N14:212/5	Scan Class: A
			Off Label: Off	On Label: On				
PCU-3\ZA-3167A	Digital	VALVE POSITION SWITCH FAILURE Y88-1	Alarmed: Yes	Security: *	Device Tag	Node Name: PCU-3	Address: N14:1/14	Scan Class: A
			Off Label: Off	On Label: On				
PCU-3\ZA-3167A1	Digital	VALVE FAILED TO OPEN Y88-1	Alarmed: Yes	Security: *	Device Tag	Node Name: PCU-3	Address: N14:1/12	Scan Class: A
			Off Label: Off	On Label: On				
PCU-3\ZA-3167A1_ACK	Digital	VALVE FAILED TO OPEN Y88-1 ACKNOWLEDGE	Alarmed: No	Security: *	Device Tag	Node Name: PCU-3	Address: N14:212/6	Scan Class: A
			Off Label: Off	On Label: On				
PCU-3\ZA-3167A2	Digital	VALVE FAILED TO CLOSE Y88-1	Alarmed: Yes	Security: *	Device Tag	Node Name: PCU-3	Address: N14:1/13	Scan Class: A
			Off Label: Off	On Label: On				
PCU-3\ZA-3167A2_ACK	Digital	VALVE FAILED TO CLOSE Y88-1 ACKNOWLEDGE	Alarmed: No	Security: *	Device Tag	Node Name: PCU-3	Address: N14:212/7	Scan Class: A
			Off Label: Off	On Label: On				
PCU-3\ZA-3167A_ACK	Digital	VALVE POSITION SWITCH FAILURE Y88-1 ACKNOWLEDGE	Alarmed: No	Security: *	Device Tag	Node Name: PCU-3	Address: N14:212/8	Scan Class: A
			Off Label: Off	On Label: On				
PCU-3\ZA-3167B	Digital	VALVE POSITION SWITCH FAILURE Y88-2	Alarmed: Yes	Security: *	Device Tag	Node Name: PCU-3	Address: N14:2/2	Scan Class: A
			Off Label: Off	On Label: On				
PCU-3\ZA-3167B1	Digital	VALVE FAILED TO OPEN Y88-2	Alarmed: Yes	Security: *	Device Tag	Node Name: PCU-3	Address: N14:2/0	Scan Class: A
			Off Label: Off	On Label: On				
PCU-3\ZA-3167B1_ACK	Digital	VALVE FAILED TO OPEN Y88-2 ACKNOWLEDGE	Alarmed: No	Security: *	Device Tag	Node Name: PCU-3	Address: N14:212/9	Scan Class: A
			Off Label: Off	On Label: On				
PCU-3\ZA-3167B2	Digital	VALVE FAILED TO CLOSE Y88-2	Alarmed: Yes	Security: *	Device Tag	Node Name: PCU-3	Address: N14:2/1	Scan Class: A
			Off Label: Off	On Label: On				
PCU-3\ZA-3167B2_ACK	Digital	VALVE FAILED TO CLOSE Y88-2 ACKNOWLEDGE	Alarmed: No	Security: *	Device Tag	Node Name: PCU-3	Address: N14:212/10	Scan Class: A
			Off Label: Off	On Label: On				
PCU-3\ZA-3167B_ACK	Digital	VALVE POSITION SWITCH FAILURE Y88-2 ACKNOWLEDGE	Alarmed: No	Security: *	Device Tag	Node Name: PCU-3	Address: N14:212/11	Scan Class: A
			Off Label: Off	On Label: On				
PCU-3\ZA-3168A	Digital	VALVE POSITION SWITCH FAILURE Y81-3	Alarmed: Yes	Security: *	Device Tag	Node Name: PCU-3	Address: N14:2/5	Scan Class: A
			Off Label: Off	On Label: On				
PCU-3\ZA-3168A1	Digital	VALVE FAILED TO OPEN Y81-3	Alarmed: Yes	Security: *	Device Tag	Node Name: PCU-3	Address: N14:2/3	Scan Class: A
			Off Label: Off	On Label: On				
PCU-3\ZA-3168A1_ACK	Digital	VALVE FAILED TO OPEN Y81-3 ACKNOWLEDGE	Alarmed: No	Security: *	Device Tag	Node Name: PCU-3	Address: N14:212/12	Scan Class: A
			Off Label: Off	On Label: On				
PCU-3\ZA-3168A2	Digital	VALVE FAILED TO CLOSE Y81-3	Alarmed: Yes	Security: *	Device Tag	Node Name: PCU-3	Address: N14:2/4	Scan Class: A
			Off Label: Off	On Label: On				
PCU-3\ZA-3168A2_ACK	Digital	VALVE FAILED TO CLOSE Y81-3 ACKNOWLEDGE	Alarmed: No	Security: *	Device Tag	Node Name: PCU-3	Address: N14:212/13	Scan Class: A
			Off Label: Off	On Label: On				
PCU-3\ZA-3168A_ACK	Digital	VALVE POSITION SWITCH FAILURE Y81-3 ACKNOWLEDGE	Alarmed: No	Security: *	Device Tag	Node Name: PCU-3	Address: N14:212/14	Scan Class: A
			Off Label: Off	On Label: On				

Tag Name	Tag Type	Description						
PCU-3\ZA-3168B	Digital	VALVE POSITION SWITCH FAILURE Y81-4	Alarmed: Yes	Security: *	Device Tag	Node Name: PCU-3	Address: N14:2/8	Scan Class: A
			Off Label: Off	On Label: On				
PCU-3\ZA-3168B1	Digital	VALVE FAILED TO OPEN Y81-4	Alarmed: Yes	Security: *	Device Tag	Node Name: PCU-3	Address: N14:2/6	Scan Class: A
			Off Label: Off	On Label: On				
PCU-3\ZA-3168B1_ ACK	Digital	VALVE FAILED TO OPEN Y81-4 ACKNOWLEDGE	Alarmed: No	Security: *	Device Tag	Node Name: PCU-3	Address: N14:212/15	Scan Class: A
			Off Label: Off	On Label: On				
PCU-3\ZA-3168B2	Digital	VALVE FAILED TO CLOSE Y81-4	Alarmed: Yes	Security: *	Device Tag	Node Name: PCU-3	Address: N14:2/7	Scan Class: A
			Off Label: Off	On Label: On				
PCU-3\ZA-3168B2_ ACK	Digital	VALVE FAILED TO CLOSE Y81-4 ACKNOWLEDGE	Alarmed: No	Security: *	Device Tag	Node Name: PCU-3	Address: N14:213/0	Scan Class: A
			Off Label: Off	On Label: On				
PCU-3\ZA-3168B_ ACK	Digital	VALVE POSITION SWITCH FAILURE Y81-4 ACKNOWLEDGE	Alarmed: No	Security: *	Device Tag	Node Name: PCU-3	Address: N14:213/1	Scan Class: A
			Off Label: Off	On Label: On				
PCU-3\ZA-3185A	Digital	VALVE POSITION SWITCH FAILURE Y81-1	Alarmed: Yes	Security: *	Device Tag	Node Name: PCU-3	Address: N14:2/11	Scan Class: A
			Off Label: Off	On Label: On				
PCU-3\ZA-3185A1	Digital	VALVE FAILED TO OPEN Y81-1	Alarmed: Yes	Security: *	Device Tag	Node Name: PCU-3	Address: N14:2/9	Scan Class: A
			Off Label: Off	On Label: On				
PCU-3\ZA-3185A1_ ACK	Digital	VALVE FAILED TO OPEN Y81-1 ACKNOWLEDGE	Alarmed: No	Security: *	Device Tag	Node Name: PCU-3	Address: N14:213/2	Scan Class: A
			Off Label: Off	On Label: On				
PCU-3\ZA-3185A2	Digital	VALVE FAILED TO CLOSE Y81-1	Alarmed: Yes	Security: *	Device Tag	Node Name: PCU-3	Address: N14:2/10	Scan Class: A
			Off Label: Off	On Label: On				
PCU-3\ZA-3185A2_ ACK	Digital	VALVE FAILED TO CLOSE Y81-1 ACKNOWLEDGE	Alarmed: No	Security: *	Device Tag	Node Name: PCU-3	Address: N14:213/3	Scan Class: A
			Off Label: Off	On Label: On				
PCU-3\ZA-3185A_ ACK	Digital	VALVE POSITION SWITCH FAILURE Y81-1 ACKNOWLEDGE	Alarmed: No	Security: *	Device Tag	Node Name: PCU-3	Address: N14:213/4	Scan Class: A
			Off Label: Off	On Label: On				
PCU-3\ZA-3185B	Digital	VALVE POSITION SWITCH FAILURE Y81-2	Alarmed: Yes	Security: *	Device Tag	Node Name: PCU-3	Address: N14:2/14	Scan Class: A
			Off Label: Off	On Label: On				
PCU-3\ZA-3185B1	Digital	VALVE FAILED TO OPEN Y81-2	Alarmed: Yes	Security: *	Device Tag	Node Name: PCU-3	Address: N14:2/12	Scan Class: A
			Off Label: Off	On Label: On				
PCU-3\ZA-3185B1_ ACK	Digital	VALVE FAILED TO OPEN Y81-2 ACKNOWLEDGE	Alarmed: No	Security: *	Device Tag	Node Name: PCU-3	Address: N14:213/5	Scan Class: A
			Off Label: Off	On Label: On				
PCU-3\ZA-3185B2	Digital	VALVE FAILED TO CLOSE Y81-2	Alarmed: Yes	Security: *	Device Tag	Node Name: PCU-3	Address: N14:2/13	Scan Class: A
			Off Label: Off	On Label: On				
PCU-3\ZA-3185B2_ ACK	Digital	VALVE FAILED TO CLOSE Y81-2 ACKNOWLEDGE	Alarmed: No	Security: *	Device Tag	Node Name: PCU-3	Address: N14:213/6	Scan Class: A
			Off Label: Off	On Label: On				
PCU-3\ZA-3185B_ ACK	Digital	VALVE POSITION SWITCH FAILURE Y81-2 ACKNOWLEDGE	Alarmed: No	Security: *	Device Tag	Node Name: PCU-3	Address: N14:213/7	Scan Class: A
			Off Label: Off	On Label: On				
PCU-3\ZA-VALVES	Digital	PCU-3 VALVE FAILURE FOR OVERVIEW SCREEN INDICATION	Alarmed: No	Security: *	Memory Tag	Initial Value: Off		
			Off Label: Off	On Label: On				
PCU-3\ZLH-3165A	Digital	SOV-3165A IS OPEN Y70	Alarmed: No	Security: *	Device Tag	Node Name: PCU-3	Address: N14:24/0	Scan Class: A
			Off Label: Off	On Label: On				

Tag Name	Tag Type	Description						
PCU-3\ZLH-3165B	Digital	SOV-3165B IS OPEN Y70	Alarmed: No	Security: *	Device Tag	Node Name: PCU-3	Address: N14:24/2	Scan Class: A
			Off Label: Off	On Label: On				
PCU-3\ZLH-3166A	Digital	SOV-3166A IS OPEN Y70	Alarmed: No	Security: *	Device Tag	Node Name: PCU-3	Address: N14:24/4	Scan Class: A
			Off Label: Off	On Label: On				
PCU-3\ZLH-3166B	Digital	SOV-3166B IS OPEN Y70	Alarmed: No	Security: *	Device Tag	Node Name: PCU-3	Address: N14:24/6	Scan Class: A
			Off Label: Off	On Label: On				
PCU-3\ZLH-3167A	Digital	SOV-3167A IS OPEN Y88-1	Alarmed: No	Security: *	Device Tag	Node Name: PCU-3	Address: N14:24/8	Scan Class: A
			Off Label: Off	On Label: On				
PCU-3\ZLH-3167B	Digital	SOV-3167B IS OPEN Y-88.2	Alarmed: No	Security: *	Device Tag	Node Name: PCU-3	Address: N14:25/10	Scan Class: A
			Off Label: Off	On Label: On				
PCU-3\ZLH-3168A	Digital	SOV-3168A IS OPEN Y81-3	Alarmed: No	Security: *	Device Tag	Node Name: PCU-3	Address: N14:24/10	Scan Class: A
			Off Label: Off	On Label: On				
PCU-3\ZLH-3168B	Digital	SOV-3168B IS OPEN Y-81-4	Alarmed: No	Security: *	Device Tag	Node Name: PCU-3	Address: N14:24/12	Scan Class: A
			Off Label: Off	On Label: On				
PCU-3\ZLH-3185A	Digital	SOV-3185A IS OPEN Y81-1	Alarmed: No	Security: *	Device Tag	Node Name: PCU-3	Address: N14:24/14	Scan Class: A
			Off Label: Off	On Label: On				
PCU-3\ZLH-3185B	Digital	SOV-3185B IS OPEN Y81-2	Alarmed: No	Security: *	Device Tag	Node Name: PCU-3	Address: N14:25/0	Scan Class: A
			Off Label: Off	On Label: On				
PCU-3\ZLL-3165A	Digital	SOV-3165A IS CLOSED Y70	Alarmed: No	Security: *	Device Tag	Node Name: PCU-3	Address: N14:24/1	Scan Class: A
			Off Label: Off	On Label: On				
PCU-3\ZLL-3165B	Digital	SOV-3165B IS CLOSED Y70	Alarmed: No	Security: *	Device Tag	Node Name: PCU-3	Address: N14:24/3	Scan Class: A
			Off Label: Off	On Label: On				
PCU-3\ZLL-3166A	Digital	SOV-3166A IS CLOSED Y70	Alarmed: No	Security: *	Device Tag	Node Name: PCU-3	Address: N14:24/5	Scan Class: A
			Off Label: Off	On Label: On				
PCU-3\ZLL-3166B	Digital	SOV-3166B IS CLOSED Y70	Alarmed: No	Security: *	Device Tag	Node Name: PCU-3	Address: N14:24/7	Scan Class: A
			Off Label: Off	On Label: On				
PCU-3\ZLL-3167A	Digital	SOV-3167A IS CLOSED Y88-1	Alarmed: No	Security: *	Device Tag	Node Name: PCU-3	Address: N14:24/9	Scan Class: A
			Off Label: Off	On Label: On				
PCU-3\ZLL-3167B	Digital	SOV-3167B IS CLOSED Y-88.2	Alarmed: No	Security: *	Device Tag	Node Name: PCU-3	Address: N14:25/11	Scan Class: A
			Off Label: Off	On Label: On				
PCU-3\ZLL-3168A	Digital	SOV-3168A IS CLOSED Y81-3	Alarmed: No	Security: *	Device Tag	Node Name: PCU-3	Address: N14:24/11	Scan Class: A
			Off Label: Off	On Label: On				
PCU-3\ZLL-3168B	Digital	SOV-3168B IS CLOSED Y-81-4	Alarmed: No	Security: *	Device Tag	Node Name: PCU-3	Address: N14:24/13	Scan Class: A
			Off Label: Off	On Label: On				
PCU-3\ZLL-3185A	Digital	SOV-3185A IS CLOSED Y81-1	Alarmed: No	Security: *	Device Tag	Node Name: PCU-3	Address: N14:24/15	Scan Class: A
			Off Label: Off	On Label: On				
PCU-3\ZLL-3185B	Digital	SOV-3185B IS CLOSED Y81-2	Alarmed: No	Security: *	Device Tag	Node Name: PCU-3	Address: N14:25/1	Scan Class: A
			Off Label: Off	On Label: On				
PCU-4\0_OFF	Digital	ALWAYS OFF PLACE HOLDER FOR PCU-4 VARIABLES	Alarmed: No	Security: *	Memory Tag	Initial Value: Off		
			Off Label: Off	On Label: On				
PCU-4\BATT_BAD_PLC4	Digital	PLC-4 BATTERY IS BAD OR MISSING	Alarmed: Yes	Security: *	Device Tag	Node Name: PCU-4	Address: N14:0/6	Scan Class: A
			Off Label: Off	On Label: On				
PCU-4\BATT_BAD_PLC4_ACK	Digital	PLC-4 BATTERY IS BAD OR MISSING ACKNOWLEDGE	Alarmed: No	Security: *	Device Tag	Node Name: PCU-4	Address: N14:210/1	Scan Class: A
			Off Label: Off	On Label: On				
PCU-4\COM-41	Digital	COMMUN. WITH PCU-1 IGNORED	Alarmed: Yes	Security: *	Device Tag	Node Name: PCU-4	Address: N14:0/1	Scan Class: A
			Off Label: Off	On Label: On				
PCU-4\COM-41_ACK	Digital	COMMUN. WITH PCU-1 IGNORED ACKNOWLEDGE	Alarmed: No	Security: *	Device Tag	Node Name: PCU-4	Address: N14:210/2	Scan Class: A
			Off Label: Off	On Label: On				

Tag Name	Tag Type	Description						
PCU-4\COM-42	Digital	COMMUN. WITH PCU-2 IGNORED	Alarmed: Yes	Security: *	Device Tag	Node Name: PCU-4	Address: N14:0/2	Scan Class: A
			Off Label: Off	On Label: On				
PCU-4\COM-42_ACK	Digital	COMMUN. WITH PCU-2 IGNORED ACKNOWLEDGE	Alarmed: No	Security: *	Device Tag	Node Name: PCU-4	Address: N14:210/3	Scan Class: A
			Off Label: Off	On Label: On				
PCU-4\COM-43	Digital	COMMUN. WITH PCU-3 IGNORED	Alarmed: Yes	Security: *	Device Tag	Node Name: PCU-4	Address: N14:0/3	Scan Class: A
			Off Label: Off	On Label: On				
PCU-4\COM-43_ACK	Digital	COMMUN. WITH PCU-3 IGNORED ACKNOWLEDGE	Alarmed: No	Security: *	Device Tag	Node Name: PCU-4	Address: N14:210/4	Scan Class: A
			Off Label: Off	On Label: On				
PCU-4\COM-45	Digital	COMMUN. WITH PCU-5 IGNORED	Alarmed: Yes	Security: *	Device Tag	Node Name: PCU-4	Address: N14:0/5	Scan Class: A
			Off Label: Off	On Label: On				
PCU-4\COM-45_ACK	Digital	COMMUN. WITH PCU-5 IGNORED ACKNOWLEDGE	Alarmed: No	Security: *	Device Tag	Node Name: PCU-4	Address: N14:210/5	Scan Class: A
			Off Label: Off	On Label: On				
PCU-4\COM-4_OCS	Digital	COMMUN. WITH OCS IGNORED	Alarmed: Yes	Security: *	Device Tag	Node Name: PCU-4	Address: N14:0/4	Scan Class: A
			Off Label: Off	On Label: On				
PCU-4\COM-4_OCS_ACK	Digital	COMMUN. WITH OCS IGNORED ACKNOWLEDGE	Alarmed: No	Security: *	Device Tag	Node Name: PCU-4	Address: N14:210/6	Scan Class: A
			Off Label: Off	On Label: On				
PCU-4\COM-OCS_4	Digital	COMMUN. WITH PCU-4 IGNORED - DETECTED AT OCS	Alarmed: Yes	Security: *	Memory Tag	Initial Value: Off		
			Off Label: Off	On Label: On				
PCU-4\COM-OCS_4_ACK	Digital	COMMUN. WITH PCU-4 IGNORED - DETECTED AT OCS ACKNOWLEDGE	Alarmed: No	Security: *	Device Tag	Node Name: PCU-4	Address: N14:210/7	Scan Class: A
			Off Label: Off	On Label: On				
PCU-4\COM_OCS_4_MNT	Digital	Communiations failure with the PLC detected in this OIT	Alarmed: Yes	Security: *	Memory Tag	Initial Value: Off		
			Off Label: Off	On Label: On				
PCU-4\COM_OCS_4_OPR	Digital	Communiations failure with the PLC detected in this OIT	Alarmed: Yes	Security: *	Memory Tag	Initial Value: Off		
			Off Label: Off	On Label: On				
PCU-4\DI-850	Analog	DENSITY READING OF 244-A SUMP	Alarmed: No	Security: *	Device Tag	Node Name: PCU-4	Address: N14:30	Scan Class: A
			Minimum : 10	Maximum : 20	Scale : 1	Offset : 0	Units: LB/FT3	Data Type: Integer
PCU-4\DI-850_A	Digital	PCU-4 INPUT ANALOG OVER OR UNDER RANGE ALARM	Alarmed: Yes	Security: *	Device Tag	Node Name: PCU-4	Address: N14:11/0	Scan Class: A
			Off Label: Off	On Label: On				
PCU-4\DI-850_A_ACK	Digital	PCU-4 INPUT ANALOG OVER OR UNDER RANGE ALARM ACKNOWLEDGE	Alarmed: No	Security: *	Device Tag	Node Name: PCU-4	Address: N14:210/8	Scan Class: A
			Off Label: Off	On Label: On				
PCU-4\DI-853	Analog	DENSITY READING OF 244-A CATCH TANK	Alarmed: No	Security: *	Device Tag	Node Name: PCU-4	Address: N14:34	Scan Class: A
			Minimum : 10	Maximum : 20	Scale : 1	Offset : 0	Units: LB/FT3	Data Type: Integer
PCU-4\DI-853_A	Digital	PCU-4 INPUT ANALOG OVER OR UNDER RANGE ALARM	Alarmed: Yes	Security: *	Device Tag	Node Name: PCU-4	Address: N14:11/4	Scan Class: A
			Off Label: Off	On Label: On				
PCU-4\DI-853_A_ACK	Digital	PCU-4 INPUT ANALOG OVER OR UNDER RANGE ALARM ACKNOWLEDGE	Alarmed: No	Security: *	Device Tag	Node Name: PCU-4	Address: N14:210/9	Scan Class: A
			Off Label: Off	On Label: On				

Tag Name	Tag Type	Description						
PCU-4\FAL-851	Digital	STACK 296-A-25 LOW FLOW	Alarmed: Yes	Security: *	Device Tag	Node Name: PCU-4	Address: N14:0/14	Scan Class: A
			Off Label: Off	On Label: On				
PCU-4\FAL-851_ACK	Digital	STACK 296-A-25 LOW FLOW ACKNOWLEDGE	Alarmed: No	Security: *	Device Tag	Node Name: PCU-4	Address: N14:212/5	Scan Class: A
			Off Label: Off	On Label: On				
PCU-4\HB_COMM_CNT	Analog	Communications checking counter	Alarmed: No	Security: *	Memory Tag	Initial Value: 0		
			Minimum : 0	Maximum : 100	Scale : 1	Offset : 0	Units:	Data Type: (Default)
PCU-4\HB_COMM_OK	Digital	Communications from PLC currently OK	Alarmed: No	Security: *	Memory Tag	Initial Value: Off		
			Off Label: Off	On Label: On				
PCU-4\HB_COMM_TIME	Analog	ACCUMULATED TIME FOR THE COMMUNICATION CHECK HEART-BEAT	Alarmed: No	Security: *	Memory Tag	Initial Value: 0		
			Minimum : 0	Maximum : 100	Scale : 1	Offset : 0	Units:	Data Type: Integer
PCU-4\HB_OCS_PLC4	Digital	HEARTBEAT FROM OCS TO PLC-4	Alarmed: No	Security: *	Device Tag	Node Name: PCU-4	Address: N14:120/0	Scan Class: A
			Off Label: Off	On Label: On				
PCU-4\HB_OCS_PLC4_MNT	Analog	COMMUN. HEARTBEAT REGISTER FROM MAINTENANCE OIT TO PCU-4	Alarmed: No	Security: *	Device Tag	Node Name: PCU-4	Address: N14:135	Scan Class: A
			Minimum : 0	Maximum : 32767	Scale : 1	Offset : 0	Units: N/A	Data Type: Integer
PCU-4\HB_OCS_PLC4_OPR	Analog	COMMUN. HEARTBEAT REGISTER FROM OPERATIONS OIT TO PCU-4	Alarmed: No	Security: *	Device Tag	Node Name: PCU-4	Address: N14:134	Scan Class: A
			Minimum : 0	Maximum : 32767	Scale : 1	Offset : 0	Units: N/A	Data Type: Integer
PCU-4\HB_PLC4_OCS	Digital	HEARTBEAT FROM PLC-4 TO OCS	Alarmed: No	Security: *	Device Tag	Node Name: PCU-4	Address: N14:0/0	Scan Class: A
			Off Label: Off	On Label: On				
PCU-4\HB_PLC4_OCS_BOTH	Analog	COMMUN. HEARTBEAT REGISTER FROM PCU-4 TO BOTH OPERATOR TERMINALS	Alarmed: No	Security: *	Device Tag	Node Name: PCU-4	Address: N14:15	Scan Class: A
			Minimum : 0	Maximum : 32767	Scale : 1	Offset : 0	Units: N/A	Data Type: Integer
PCU-4\HB_REF	Analog	Communications heartbeat reference register	Alarmed: No	Security: *	Memory Tag	Initial Value: 0		
			Minimum : 0	Maximum : 32767	Scale : 1	Offset : 0	Units:	Data Type: (Default)
PCU-4\HS-058E	Digital	OVERRIDE OF 200-E MASTER SHUTDOWN Y-77.1	Alarmed: No	Security: *	Device Tag	Node Name: PCU-4	Address: N14:120/4	Scan Class: A
			Off Label: Off	On Label: On				
PCU-4\LDA-3163	Digital	244-A TO AN ENC. LEAK DETECTION [OFF = ALARM]	Alarmed: Yes	Security: *	Device Tag	Node Name: PCU-4	Address: N14:26/1	Scan Class: A
			Off Label: Off	On Label: On				
PCU-4\LDA-3163_ACK	Digital	244-A TO AN ENC. LEAK DETECTION [OFF = ALARM] ACKNOWLEDGE	Alarmed: No	Security: *	Device Tag	Node Name: PCU-4	Address: N14:210/14	Scan Class: A
			Off Label: Off	On Label: On				
PCU-4\LDA-841	Digital	244-A PUMP PIT LEAK DETECTION (OFF=ALARM) Y72	Alarmed: Yes	Security: *	Device Tag	Node Name: PCU-4	Address: N14:26/14	Scan Class: A
			Off Label: Off	On Label: On				
PCU-4\LDA-841_ACK	Digital	244-A PUMP PIT LEAK DETECTION Y72 ACKNOWLEDGE	Alarmed: No	Security: *	Device Tag	Node Name: PCU-4	Address: N14:210/11	Scan Class: A
			Off Label: Off	On Label: On				
PCU-4\LI-850	Analog	244-A SUMP LEVEL READING	Alarmed: No	Security: *	Device Tag	Node Name: PCU-4	Address: N14:31	Scan Class: A
			Minimum : 0	Maximum : 20	Scale : 1	Offset : 0	Units: INCHES	Data Type: Integer

Tag Name	Tag Type	Description						
PCU-4\LI-850_A	Digital	PCU-4 INPUT ANALOG OVER OR UNDER RANGE ALARM	Alarmed: Yes	Security: *	Device Tag	Node Name: PCU-4	Address: N14:11/1	Scan Class: A
			Off Label: Off	On Label: On				
PCU-4\LI-850_A_ACK	Digital	PCU-4 INPUT ANALOG OVER OR UNDER RANGE ALARM ACKNOWLEDGE	Alarmed: No	Security: *	Device Tag	Node Name: PCU-4	Address: N14:210/12	Scan Class: A
			Off Label: Off	On Label: On				
PCU-4\LI-853	Analog	244-A CATCH TANK LEVEL READING	Alarmed: No	Security: *	Device Tag	Node Name: PCU-4	Address: N14:35	Scan Class: A
			Minimum : 0	Maximum : 200	Scale : 1	Offset : 0	Units: INCHES	Data Type: Integer
PCU-4\LI-853_A	Digital	PCU-4 INPUT ANALOG OVER OR UNDER RANGE ALARM	Alarmed: Yes	Security: *	Device Tag	Node Name: PCU-4	Address: N14:11/5	Scan Class: A
			Off Label: Off	On Label: On				
PCU-4\LI-853_A_ACK	Digital	PCU-4 INPUT ANALOG OVER OR UNDER RANGE ALARM ACKNOWLEDGE	Alarmed: No	Security: *	Device Tag	Node Name: PCU-4	Address: N14:210/13	Scan Class: A
			Off Label: Off	On Label: On				
PCU-4\P-200E-SPM	Digital	START PERM. CONTACT FOR 200-E TRANSF. PUMP Y-44.1	Alarmed: No	Security: *	Device Tag	Node Name: PCU-4	Address: N14:29/10	Scan Class: A
			Off Label: Off	On Label: On				
PCU-4\PAH-842	Digital	SUPERNATE LINE HIGH PRESSURE	Alarmed: Yes	Security: *	Device Tag	Node Name: PCU-4	Address: N14:0/15	Scan Class: A
			Off Label: Off	On Label: On				
PCU-4\PAH-842_ACK	Digital	SUPERNATE LINE HIGH PRESSURE ACKNOWLEDGE	Alarmed: No	Security: *	Device Tag	Node Name: PCU-4	Address: N14:212/6	Scan Class: A
			Off Label: Off	On Label: On				
PCU-4\PCU-4-SP-I3-0	Digital	SPARE DIGITAL INPUT	Alarmed: No	Security: *	Device Tag	Node Name: PCU-4	Address: N14:26/0	Scan Class: A
			Off Label: Off	On Label: On				
PCU-4\PCU-4-SP-I3-10	Digital	SPARE DIGITAL INPUT	Alarmed: No	Security: *	Device Tag	Node Name: PCU-4	Address: N14:26/10	Scan Class: A
			Off Label: Off	On Label: On				
PCU-4\PCU-4-SP-I3-11	Digital	SPARE DIGITAL INPUT	Alarmed: No	Security: *	Device Tag	Node Name: PCU-4	Address: N14:26/11	Scan Class: A
			Off Label: Off	On Label: On				
PCU-4\PCU-4-SP-I3-2	Digital	SPARE DIGITAL INPUT	Alarmed: No	Security: *	Device Tag	Node Name: PCU-4	Address: N14:26/2	Scan Class: A
			Off Label: Off	On Label: On				
PCU-4\PCU-4-SP-I3-3	Digital	SPARE DIGITAL INPUT	Alarmed: No	Security: *	Device Tag	Node Name: PCU-4	Address: N14:26/3	Scan Class: A
			Off Label: Off	On Label: On				
PCU-4\PCU-4-SP-I3-4	Digital	SPARE DIGITAL INPUT	Alarmed: No	Security: *	Device Tag	Node Name: PCU-4	Address: N14:26/4	Scan Class: A
			Off Label: Off	On Label: On				
PCU-4\PCU-4-SP-I3-5	Digital	SPARE DIGITAL INPUT	Alarmed: No	Security: *	Device Tag	Node Name: PCU-4	Address: N14:26/5	Scan Class: A
			Off Label: Off	On Label: On				
PCU-4\PCU-4-SP-I3-6	Digital	SPARE DIGITAL INPUT	Alarmed: No	Security: *	Device Tag	Node Name: PCU-4	Address: N14:26/6	Scan Class: A
			Off Label: Off	On Label: On				
PCU-4\PCU-4-SP-I3-7	Digital	SPARE DIGITAL INPUT	Alarmed: No	Security: *	Device Tag	Node Name: PCU-4	Address: N14:26/7	Scan Class: A
			Off Label: Off	On Label: On				
PCU-4\PCU-4-SP-I3-8	Digital	SPARE DIGITAL INPUT	Alarmed: No	Security: *	Device Tag	Node Name: PCU-4	Address: N14:26/8	Scan Class: A
			Off Label: Off	On Label: On				
PCU-4\PCU-4-SP-I3-9	Digital	SPARE DIGITAL INPUT	Alarmed: No	Security: *	Device Tag	Node Name: PCU-4	Address: N14:26/9	Scan Class: A
			Off Label: Off	On Label: On				
PCU-4\PCU4-SP-O7-0	Digital	SPARE DIGITAL OUTPUT	Alarmed: No	Security: *	Device Tag	Node Name: PCU-4	Address: N14:29/0	Scan Class: A
			Off Label: Off	On Label: On				
PCU-4\PCU4-SP-O7-1	Digital	SPARE DIGITAL OUTPUT	Alarmed: No	Security: *	Device Tag	Node Name: PCU-4	Address: N14:29/1	Scan Class: A
			Off Label: Off	On Label: On				

Tag Name	Tag Type	Description						
PCU-4\PCU4-SP-O7-13	Digital	SPARE DIGITAL OUTPUT	Alarmed: No	Security: *	Device Tag	Node Name: PCU-4	Address: N14:29/11	Scan Class: A
			Off Label: Off	On Label: On				
PCU-4\PCU4-SP-O7-14	Digital	SPARE DIGITAL OUTPUT	Alarmed: No	Security: *	Device Tag	Node Name: PCU-4	Address: N14:29/12	Scan Class: A
			Off Label: Off	On Label: On				
PCU-4\PCU4-SP-O7-15	Digital	SPARE DIGITAL OUTPUT	Alarmed: No	Security: *	Device Tag	Node Name: PCU-4	Address: N14:29/13	Scan Class: A
			Off Label: Off	On Label: On				
PCU-4\PCU4-SP-O7-16	Digital	SPARE DIGITAL OUTPUT	Alarmed: No	Security: *	Device Tag	Node Name: PCU-4	Address: N14:29/14	Scan Class: A
			Off Label: Off	On Label: On				
PCU-4\PCU4-SP-O7-17	Digital	SPARE DIGITAL OUTPUT	Alarmed: No	Security: *	Device Tag	Node Name: PCU-4	Address: N14:29/15	Scan Class: A
			Off Label: Off	On Label: On				
PCU-4\PCU4-SP-O7-2	Digital	SPARE DIGITAL OUTPUT	Alarmed: No	Security: *	Device Tag	Node Name: PCU-4	Address: N14:29/2	Scan Class: A
			Off Label: Off	On Label: On				
PCU-4\PCU4-SP-O7-3	Digital	SPARE DIGITAL OUTPUT	Alarmed: No	Security: *	Device Tag	Node Name: PCU-4	Address: N14:29/3	Scan Class: A
			Off Label: Off	On Label: On				
PCU-4\PCU4-SP-O7-4	Digital	SPARE DIGITAL OUTPUT	Alarmed: No	Security: *	Device Tag	Node Name: PCU-4	Address: N14:29/4	Scan Class: A
			Off Label: Off	On Label: On				
PCU-4\PCU4-SP-O7-5	Digital	SPARE DIGITAL OUTPUT	Alarmed: No	Security: *	Device Tag	Node Name: PCU-4	Address: N14:29/5	Scan Class: A
			Off Label: Off	On Label: On				
PCU-4\PCU4-SP-O7-6	Digital	SPARE DIGITAL OUTPUT	Alarmed: No	Security: *	Device Tag	Node Name: PCU-4	Address: N14:29/6	Scan Class: A
			Off Label: Off	On Label: On				
PCU-4\PCU4-SP-O7-7	Digital	SPARE DIGITAL OUTPUT	Alarmed: No	Security: *	Device Tag	Node Name: PCU-4	Address: N14:29/7	Scan Class: A
			Off Label: Off	On Label: On				
PCU-4\PCU4-SP-O7-8	Digital	SPARE DIGITAL OUTPUT	Alarmed: No	Security: *	Device Tag	Node Name: PCU-4	Address: N14:29/8	Scan Class: A
			Off Label: Off	On Label: On				
PCU-4\PCU4-SP-O7-9	Digital	SPARE DIGITAL OUTPUT	Alarmed: No	Security: *	Device Tag	Node Name: PCU-4	Address: N14:29/9	Scan Class: A
			Off Label: Off	On Label: On				
PCU-4\PCU4-SP-TI-2	Analog	SPARE THERMOCOUPLE INPUT	Alarmed: No	Security: *	Device Tag	Node Name: PCU-4	Address: N14:39	Scan Class: A
			Minimum : 0	Maximum : 32768	Scale : 1	Offset : 0	Units:	Data Type: Integer
PCU-4\PCU4-SP-TI-2_A	Digital	PCU-4 INPUT THERMOCOUPLE OVER OR UNDER RANGE ALARM	Alarmed: No	Security: *	Device Tag	Node Name: PCU-4	Address: N14:12/9	Scan Class: A
			Off Label: Off	On Label: On				
PCU-4\PCU4-SP-TI-4	Analog	SPARE THERMOCOUPLE INPUT	Alarmed: No	Security: *	Device Tag	Node Name: PCU-4	Address: N14:41	Scan Class: A
			Minimum : 0	Maximum : 32768	Scale : 1	Offset : 0	Units:	Data Type: Integer
PCU-4\PCU4-SP-TI-4_A	Digital	PCU-4 INPUT THERMOCOUPLE OVER OR UNDER RANGE ALARM	Alarmed: No	Security: *	Device Tag	Node Name: PCU-4	Address: N14:12/11	Scan Class: A
			Off Label: Off	On Label: On				
PCU-4\PCU4-SP-TI-5	Analog	SPARE THERMOCOUPLE INPUT	Alarmed: No	Security: *	Device Tag	Node Name: PCU-4	Address: N14:42	Scan Class: A
			Minimum : 0	Maximum : 32768	Scale : 1	Offset : 0	Units:	Data Type: Integer
PCU-4\PCU4-SP-TI-5_A	Digital	PCU-4 INPUT THERMOCOUPLE OVER OR UNDER RANGE ALARM	Alarmed: No	Security: *	Device Tag	Node Name: PCU-4	Address: N14:12/12	Scan Class: A
			Off Label: Off	On Label: On				
PCU-4\PCU4-SP-TI-6	Analog	SPARE THERMOCOUPLE INPUT	Alarmed: No	Security: *	Device Tag	Node Name: PCU-4	Address: N14:43	Scan Class: A
			Minimum : 0	Maximum : 32768	Scale : 1	Offset : 0	Units:	Data Type: Integer
PCU-4\PCU4-SP-TI-6_A	Digital	PCU-4 INPUT THERMOCOUPLE OVER OR UNDER RANGE ALARM	Alarmed: No	Security: *	Device Tag	Node Name: PCU-4	Address: N14:12/13	Scan Class: A
			Off Label: Off	On Label: On				
PCU-4\PCU4-SP-TI-7	Analog	SPARE THERMOCOUPLE INPUT	Alarmed: No	Security: *	Device Tag	Node Name: PCU-4	Address: N14:44	Scan Class: A
			Minimum : 0	Maximum : 32768	Scale : 1	Offset : 0	Units:	Data Type: Integer

Tag Name	Tag Type	Description						
PCU-4\PCU4-SP-TI-7_A	Digital	PCU-4 INPUT THERMOCOUPLE OVER OR UNDER RANGE ALARM	Alarmed: No	Security: *	Device Tag	Node Name: PCU-4	Address: N14:12/14	Scan Class: A
			Off Label: Off	On Label: On				
PCU-4\PCU4-SP-TI-8	Analog	SPARE THERMOCOUPLE INPUT	Alarmed: No	Security: *	Device Tag	Node Name: PCU-4	Address: N14:45	Scan Class: A
			Minimum : 0	Maximum : 32768	Scale : 1	Offset : 0	Units:	Data Type: Integer
PCU-4\PCU4-SP-TI-8_A	Digital	PCU-4 INPUT THERMOCOUPLE OVER OR UNDER RANGE ALARM	Alarmed: No	Security: *	Device Tag	Node Name: PCU-4	Address: N14:12/15	Scan Class: A
			Off Label: Off	On Label: On				
PCU-4\RAH-851	Digital	STACK 296-A-25 HIGH RADIATION	Alarmed: Yes	Security: *	Device Tag	Node Name: PCU-4	Address: N14:0/13	Scan Class: A
			Off Label: Off	On Label: On				
PCU-4\RAH-851_ACK	Digital	STACK 296-A-25 HIGH RADIATION ACKNOWLEDGE	Alarmed: No	Security: *	Device Tag	Node Name: PCU-4	Address: N14:212/7	Scan Class: A
			Off Label: Off	On Label: On				
PCU-4\TAH_CAB_PLC4	Digital	PLC-4 CABINET HIGH TEMPERATURE [OFF = ALARM]	Alarmed: Yes	Security: *	Device Tag	Node Name: PCU-4	Address: N14:26/0	Scan Class: A
			Off Label: Off	On Label: On				
PCU-4\TAH_CAB_PLC4_ACK	Digital	PLC-4 CABINET HIGH TEMPERATURE ACKNOWLEDGE	Alarmed: No	Security: *	Device Tag	Node Name: PCU-4	Address: N14:211/7	Scan Class: A
			Off Label: Off	On Label: On				
PCU-4\XA-058E	Digital	200-E MASTER SHUTDOWN CIRCUIT ACTIVATED Y-77.1	Alarmed: Yes	Security: *	Device Tag	Node Name: PCU-4	Address: N14:26/12	Scan Class: A
			Off Label: Off	On Label: On				
PCU-4\XA-058E_ACK	Digital	200-E MASTER SHUTDOWN CIRCUIT ACTIVATED Y-77.1 ACKNOWLEDGE	Alarmed: No	Security: *	Device Tag	Node Name: PCU-4	Address: N14:210/0	Scan Class: A
			Off Label: Off	On Label: On				
PCU-4\YL-058E	Digital	OVERRIDE OF 200-E MASTER SHUTDOWN Y-77.1	Alarmed: No	Security: *	Device Tag	Node Name: PCU-4	Address: N14:0/12	Scan Class: A
			Off Label: Off	On Label: On				
PCU-4\YL-841	Digital	ON/OFF STATUS FOR PUMP P-841 (OCS)	Alarmed: No	Security: *	Device Tag	Node Name: PCU-4	Address: N14:26/15	Scan Class: A
			Off Label: Off	On Label: On				
PCU-5\0_OFF	Digital	ALWAYS OFF PLACE HOLDER FOR PCU-5 VARIABLES	Alarmed: No	Security: *	Memory Tag	Initial Value: Off		
			Off Label: Off	On Label: On				
PCU-5\BATT_BAD_PLC5	Digital	PLC-5 BATTERY IS BAD OR MISSING	Alarmed: Yes	Security: *	Device Tag	Node Name: PCU-5	Address: N14:0/6	Scan Class: A
			Off Label: Off	On Label: On				
PCU-5\BATT_BAD_PLC5_ACK	Digital	PLC-5 BATTERY IS BAD OR MISSING ACKNOWLEDGE	Alarmed: No	Security: *	Device Tag	Node Name: PCU-5	Address: N14:210/0	Scan Class: A
			Off Label: Off	On Label: On				
PCU-5\COM-51	Digital	COMMUN. WITH PCU-1 IGNORED	Alarmed: Yes	Security: *	Device Tag	Node Name: PCU-5	Address: N14:0/1	Scan Class: A
			Off Label: Off	On Label: On				
PCU-5\COM-51_ACK	Digital	COMMUN. WITH PCU-1 IGNORED ACKNOWLEDGE	Alarmed: No	Security: *	Device Tag	Node Name: PCU-5	Address: N14:210/1	Scan Class: A
			Off Label: Off	On Label: On				
PCU-5\COM-52	Digital	COMMUN. WITH PCU-2 IGNORED	Alarmed: Yes	Security: *	Device Tag	Node Name: PCU-5	Address: N14:0/2	Scan Class: A
			Off Label: Off	On Label: On				
PCU-5\COM-52_ACK	Digital	COMMUN. WITH PCU-2 IGNORED ACKNOWLEDGE	Alarmed: No	Security: *	Device Tag	Node Name: PCU-5	Address: N14:210/2	Scan Class: A
			Off Label: Off	On Label: On				
PCU-5\COM-53	Digital	COMMUN. WITH PCU-3 IGNORED	Alarmed: Yes	Security: *	Device Tag	Node Name: PCU-5	Address: N14:0/3	Scan Class: A
			Off Label: Off	On Label: On				

Tag Name	Tag Type	Description						
PCU-5\COM-53_ACK	Digital	COMMUN. WITH PCU-3 IGNORED ACKNOWLEDGE	Alarmed: No	Security: *	Device Tag	Node Name: PCU-5	Address: N14:210/3	Scan Class: A
			Off Label: Off	On Label: On				
PCU-5\COM-54	Digital	COMMUN. WITH PCU-4 IGNORED	Alarmed: Yes	Security: *	Device Tag	Node Name: PCU-5	Address: N14:0/4	Scan Class: A
			Off Label: Off	On Label: On				
PCU-5\COM-54_ACK	Digital	COMMUN. WITH PCU-4 IGNORED ACKNOWLEDGE	Alarmed: No	Security: *	Device Tag	Node Name: PCU-5	Address: N14:210/4	Scan Class: A
			Off Label: Off	On Label: On				
PCU-5\COM-5_OCS	Digital	COMMUN. WITH OCS IGNORED	Alarmed: Yes	Security: *	Device Tag	Node Name: PCU-5	Address: N14:0/5	Scan Class: A
			Off Label: Off	On Label: On				
PCU-5\COM-5_OCS_ACK	Digital	COMMUN. WITH OCS IGNORED ACKNOWLEDGE	Alarmed: No	Security: *	Device Tag	Node Name: PCU-5	Address: N14:210/5	Scan Class: A
			Off Label: Off	On Label: On				
PCU-5\COM-OCS_5	Digital	COMMUN. WITH PCU-5 IGNORED - DETECTED AT OCS	Alarmed: Yes	Security: *	Memory Tag	Initial Value: Off		
			Off Label: Off	On Label: On				
PCU-5\COM-OCS_5_ACK	Digital	COMMUN. WITH PCU-5 IGNORED - DETECTED AT OCS ACKNOWLEDGE	Alarmed: No	Security: *	Memory Tag	Initial Value: Off		
			Off Label: Off	On Label: On				
PCU-5\COM_OCS_5_MNT	Digital	Communiations failure with the PLC detected in this OIT	Alarmed: Yes	Security: *	Memory Tag	Initial Value: Off		
			Off Label: Off	On Label: On				
PCU-5\COM_OCS_5_OPR	Digital	Communiations failure with the PLC detected in this OIT	Alarmed: Yes	Security: *	Memory Tag	Initial Value: Off		
			Off Label: Off	On Label: On				
PCU-5\HB_COMM_CNT	Analog	Communications checking counter	Alarmed: No	Security: *	Memory Tag	Initial Value: 0		
			Minimum : 0	Maximum : 100	Scale : 1	Offset : 0	Units:	Data Type: (Default)
PCU-5\HB_COMM_OK	Digital	Communications from PLC currently OK	Alarmed: No	Security: *	Memory Tag	Initial Value: Off		
			Off Label: Off	On Label: On				
PCU-5\HB_COMM_TIME	Analog	ACCUMULATED TIME FOR THE COMMUNICATION CHECK HEART-BEAT	Alarmed: No	Security: *	Memory Tag	Initial Value: 0		
			Minimum : 0	Maximum : 100	Scale : 1	Offset : 0	Units:	Data Type: Integer
PCU-5\HB_OCS_PLC5	Digital	HEARTBEAT FROM OCS TO PLC-5	Alarmed: No	Security: *	Device Tag	Node Name: PCU-5	Address: N14:120/0	Scan Class: A
			Off Label: Off	On Label: On				
PCU-5\HB_OCS_PLC5_MNT	Analog	COMMUN. HEARTBEAT REGISTER FROM MAINTENANCE OIT TO PCU-5	Alarmed: No	Security: *	Device Tag	Node Name: PCU-5	Address: N14:135	Scan Class: A
			Minimum : 0	Maximum : 32767	Scale : 1	Offset : 0	Units: N/A	Data Type: Integer
PCU-5\HB_OCS_PLC5_OPR	Analog	COMMUN. HEARTBEAT REGISTER FROM OPERATIONS OIT TO PCU-5	Alarmed: No	Security: *	Device Tag	Node Name: PCU-5	Address: N14:134	Scan Class: A
			Minimum : 0	Maximum : 32767	Scale : 1	Offset : 0	Units: N/A	Data Type: Integer
PCU-5\HB_PLC5_OCS	Digital	HEARTBEAT FROM PLC-5 TO OCS	Alarmed: No	Security: *	Device Tag	Node Name: PCU-5	Address: N14:0/0	Scan Class: A
			Off Label: Off	On Label: On				
PCU-5\HB_PLC5_OCS_BOTH	Analog	COMMUN. HEARTBEAT REGISTER FROM PCU-5 TO BOTH OPERATOR TERMINALS	Alarmed: No	Security: *	Device Tag	Node Name: PCU-5	Address: N14:15	Scan Class: A
			Minimum : 0	Maximum : 32767	Scale : 1	Offset : 0	Units: N/A	Data Type: Integer
PCU-5\HB_REF	Analog	Communications heartbeat reference register	Alarmed: No	Security: *	Memory Tag	Initial Value: 0		
			Minimum : 0	Maximum : 32767	Scale : 1	Offset : 0	Units:	Data Type: (Default)

Tag Name	Tag Type	Description						
PCU-5\LDA-3162	Digital	244-A ENCASEMENT LEAK DETECTION [OFF = ALARM] Y72	Alarmed: Yes	Security: *	Device Tag	Node Name: PCU-5	Address: N14:28/0	Scan Class: A
			Off Label: Off	On Label: On				
PCU-5\LDA-3162_ACK	Digital	244-A ENCASEMENT LEAK DETECTION [OFF = ALARM] Y72 ACKNOWLEDGE	Alarmed: No	Security: *	Device Tag	Node Name: PCU-5	Address: N14:210/7	Scan Class: A
			Off Label: Off	On Label: On				
PCU-5\PCU5-SP-I0-01	Digital	SPARE DIGITAL INPUT	Alarmed: No	Security: *	Device Tag	Node Name: PCU-5	Address: N14:28/1	Scan Class: A
			Off Label: Off	On Label: On				
PCU-5\PCU5-SP-I0-02	Digital	SPARE DIGITAL INPUT	Alarmed: No	Security: *	Device Tag	Node Name: PCU-5	Address: N14:28/2	Scan Class: A
			Off Label: Off	On Label: On				
PCU-5\PCU5-SP-I0-03	Digital	SPARE DIGITAL INPUT	Alarmed: No	Security: *	Device Tag	Node Name: PCU-5	Address: N14:28/3	Scan Class: A
			Off Label: Off	On Label: On				
PCU-5\PCU5-SP-I0-04	Digital	SPARE DIGITAL INPUT	Alarmed: No	Security: *	Device Tag	Node Name: PCU-5	Address: N14:28/4	Scan Class: A
			Off Label: Off	On Label: On				
PCU-5\PCU5-SP-I0-05	Digital	SPARE DIGITAL INPUT	Alarmed: No	Security: *	Device Tag	Node Name: PCU-5	Address: N14:28/5	Scan Class: A
			Off Label: Off	On Label: On				
PCU-5\PCU5-SP-I0-06	Digital	SPARE DIGITAL INPUT	Alarmed: No	Security: *	Device Tag	Node Name: PCU-5	Address: N14:28/6	Scan Class: A
			Off Label: Off	On Label: On				
PCU-5\PCU5-SP-I0-07	Digital	SPARE DIGITAL INPUT	Alarmed: No	Security: *	Device Tag	Node Name: PCU-5	Address: N14:28/7	Scan Class: A
			Off Label: Off	On Label: On				
PCU-5\PCU5-SP-I0-10	Digital	SPARE DIGITAL INPUT	Alarmed: No	Security: *	Device Tag	Node Name: PCU-5	Address: N14:28/8	Scan Class: A
			Off Label: Off	On Label: On				
PCU-5\PCU5-SP-I0-11	Digital	SPARE DIGITAL INPUT	Alarmed: No	Security: *	Device Tag	Node Name: PCU-5	Address: N14:28/9	Scan Class: A
			Off Label: Off	On Label: On				
PCU-5\PCU5-SP-I0-12	Digital	SPARE DIGITAL INPUT	Alarmed: No	Security: *	Device Tag	Node Name: PCU-5	Address: N14:28/10	Scan Class: A
			Off Label: Off	On Label: On				
PCU-5\PCU5-SP-I0-13	Digital	SPARE DIGITAL INPUT	Alarmed: No	Security: *	Device Tag	Node Name: PCU-5	Address: N14:28/11	Scan Class: A
			Off Label: Off	On Label: On				
PCU-5\PCU5-SP-I0-14	Digital	SPARE DIGITAL INPUT	Alarmed: No	Security: *	Device Tag	Node Name: PCU-5	Address: N14:28/12	Scan Class: A
			Off Label: Off	On Label: On				
PCU-5\PCU5-SP-I0-15	Digital	SPARE DIGITAL INPUT	Alarmed: No	Security: *	Device Tag	Node Name: PCU-5	Address: N14:28/13	Scan Class: A
			Off Label: Off	On Label: On				
PCU-5\PCU5-SP-I0-16	Digital	SPARE DIGITAL INPUT	Alarmed: No	Security: *	Device Tag	Node Name: PCU-5	Address: N14:28/14	Scan Class: A
			Off Label: Off	On Label: On				
PCU-5\PCU5-SP-I0-17	Digital	SPARE DIGITAL INPUT	Alarmed: No	Security: *	Device Tag	Node Name: PCU-5	Address: N14:28/15	Scan Class: A
			Off Label: Off	On Label: On				
PCU-5\TAH_CAB_PLC5	Digital	PLC-5 CABINET HIGH TEMPERATURE [OFF = ALARM]	Alarmed: Yes	Security: *	Device Tag	Node Name: PCU-5	Address: N14:28/1	Scan Class: A
			Off Label: Off	On Label: On				
PCU-5\TAH_CAB_PLC5_ACK	Digital	PLC-5 CABINET HIGH TEMPERATURE ACKNOWLEDGE	Alarmed: No	Security: *	Device Tag	Node Name: PCU-5	Address: N14:210/8	Scan Class: A
			Off Label: Off	On Label: On				
R_TRANSF_DLG_EN	Digital	ENABLE THE TRANSFER DATA LOGGING THE FIRST TIME IT IS USED	Alarmed: No	Security: *	Memory Tag	Initial Value: Off		
			Off Label: Off	On Label: On				
SCREEN_NUMBER	Analog	CURRENT SCREEN NUMBER (1 TO 12)	Alarmed: No	Security: *	Memory Tag	Initial Value: 1		
			Minimum : 0	Maximum : 100	Scale : 1	Offset : 0	Units:	Data Type: Integer

Tag Name	Tag Type	Description						
SECURITY	Analog	PRESENT SECURITY LEVEL	Alarmed: No	Security: *	Memory Tag	Initial Value: 0		
			Minimum : 0	Maximum : 3	Scale : 1	Offset : 0	Units:	Data Type: Integer
STATION_CHECK	Digital	INITIATE CHECKING OIT STAION ID ON POWER-UP	Alarmed: No	Security: *	Memory Tag	Initial Value: Off		
			Off Label: Off	On Label: On				
SyncTAD\PCU-1\ Day	Analog	SyncTAD day tag. Do not modify.	Alarmed: No	Security: *	Device Tag	Node Name: PCU-1	Address: S:20	Scan Class: A
			Minimum : 1	Maximum : 31	Scale : 1	Offset : 0	Units: Day	Data Type: (Default)
SyncTAD\PCU-1\ Hour	Analog	SyncTAD hour tag. Do not modify.	Alarmed: No	Security: *	Device Tag	Node Name: PCU-1	Address: S:21	Scan Class: A
			Minimum : 0	Maximum : 23	Scale : 1	Offset : 0	Units: Hour	Data Type: (Default)
SyncTAD\PCU-1\ Minute	Analog	SyncTAD minute tag. Do not modify.	Alarmed: No	Security: *	Device Tag	Node Name: PCU-1	Address: S:22	Scan Class: A
			Minimum : 0	Maximum : 59	Scale : 1	Offset : 0	Units: Minute	Data Type: (Default)
SyncTAD\PCU-1\ Month	Analog	SyncTAD month tag. Do not modify.	Alarmed: No	Security: *	Device Tag	Node Name: PCU-1	Address: S:19	Scan Class: A
			Minimum : 1	Maximum : 12	Scale : 1	Offset : 0	Units: Month	Data Type: (Default)
SyncTAD\PCU-1\ Second	Analog	SyncTAD second tag. Do not modify.	Alarmed: No	Security: *	Device Tag	Node Name: PCU-1	Address: S:23	Scan Class: A
			Minimum : 0	Maximum : 59	Scale : 1	Offset : 0	Units: Seconds	Data Type: (Default)
SyncTAD\PCU-1\ Year	Analog	SyncTAD year tag. Do not modify.	Alarmed: No	Security: *	Device Tag	Node Name: PCU-1	Address: S:18	Scan Class: A
			Minimum : 100	Maximum : 9999	Scale : 1	Offset : 0	Units: Year	Data Type: (Default)
SyncTAD\PCU-2\ Day	Analog	SyncTAD day tag. Do not modify.	Alarmed: No	Security: *	Device Tag	Node Name: PCU-2	Address: S:20	Scan Class: A
			Minimum : 1	Maximum : 31	Scale : 1	Offset : 0	Units: Day	Data Type: (Default)
SyncTAD\PCU-2\ Hour	Analog	SyncTAD hour tag. Do not modify.	Alarmed: No	Security: *	Device Tag	Node Name: PCU-2	Address: S:21	Scan Class: A
			Minimum : 0	Maximum : 23	Scale : 1	Offset : 0	Units: Hour	Data Type: (Default)
SyncTAD\PCU-2\ Minute	Analog	SyncTAD minute tag. Do not modify.	Alarmed: No	Security: *	Device Tag	Node Name: PCU-2	Address: S:22	Scan Class: A
			Minimum : 0	Maximum : 59	Scale : 1	Offset : 0	Units: Minute	Data Type: (Default)
SyncTAD\PCU-2\ Month	Analog	SyncTAD month tag. Do not modify.	Alarmed: No	Security: *	Device Tag	Node Name: PCU-2	Address: S:19	Scan Class: A
			Minimum : 1	Maximum : 12	Scale : 1	Offset : 0	Units: Month	Data Type: (Default)
SyncTAD\PCU-2\ Second	Analog	SyncTAD second tag. Do not modify.	Alarmed: No	Security: *	Device Tag	Node Name: PCU-2	Address: S:23	Scan Class: A
			Minimum : 0	Maximum : 59	Scale : 1	Offset : 0	Units: Seconds	Data Type: (Default)
SyncTAD\PCU-2\ Year	Analog	SyncTAD year tag. Do not modify.	Alarmed: No	Security: *	Device Tag	Node Name: PCU-2	Address: S:18	Scan Class: A
			Minimum : 100	Maximum : 9999	Scale : 1	Offset : 0	Units: Year	Data Type: (Default)
SyncTAD\PCU-3\ Day	Analog	SyncTAD day tag. Do not modify.	Alarmed: No	Security: *	Device Tag	Node Name: PCU-3	Address: S:20	Scan Class: A
			Minimum : 1	Maximum : 31	Scale : 1	Offset : 0	Units: Day	Data Type: (Default)
SyncTAD\PCU-3\ Hour	Analog	SyncTAD hour tag. Do not modify.	Alarmed: No	Security: *	Device Tag	Node Name: PCU-3	Address: S:21	Scan Class: A
			Minimum : 0	Maximum : 23	Scale : 1	Offset : 0	Units: Hour	Data Type: (Default)
SyncTAD\PCU-3\ Minute	Analog	SyncTAD minute tag. Do not modify.	Alarmed: No	Security: *	Device Tag	Node Name: PCU-3	Address: S:22	Scan Class: A
			Minimum : 0	Maximum : 59	Scale : 1	Offset : 0	Units: Minute	Data Type: (Default)
SyncTAD\PCU-3\ Month	Analog	SyncTAD month tag. Do not modify.	Alarmed: No	Security: *	Device Tag	Node Name: PCU-3	Address: S:19	Scan Class: A
			Minimum : 1	Maximum : 12	Scale : 1	Offset : 0	Units: Month	Data Type: (Default)
SyncTAD\PCU-3\ Second	Analog	SyncTAD second tag. Do not modify.	Alarmed: No	Security: *	Device Tag	Node Name: PCU-3	Address: S:23	Scan Class: A
			Minimum : 0	Maximum : 59	Scale : 1	Offset : 0	Units: Seconds	Data Type: (Default)
SyncTAD\PCU-3\ Year	Analog	SyncTAD year tag. Do not modify.	Alarmed: No	Security: *	Device Tag	Node Name: PCU-3	Address: S:18	Scan Class: A
			Minimum : 100	Maximum : 9999	Scale : 1	Offset : 0	Units: Year	Data Type: (Default)
SyncTAD\PCU-4\ Day	Analog	SyncTAD day tag. Do not modify.	Alarmed: No	Security: *	Device Tag	Node Name: PCU-4	Address: S:20	Scan Class: A
			Minimum : 1	Maximum : 31	Scale : 1	Offset : 0	Units: Day	Data Type: (Default)
SyncTAD\PCU-4\ Hour	Analog	SyncTAD hour tag. Do not modify.	Alarmed: No	Security: *	Device Tag	Node Name: PCU-4	Address: S:21	Scan Class: A
			Minimum : 0	Maximum : 23	Scale : 1	Offset : 0	Units: Hour	Data Type: (Default)
SyncTAD\PCU-4\ Minute	Analog	SyncTAD minute tag. Do not modify.	Alarmed: No	Security: *	Device Tag	Node Name: PCU-4	Address: S:22	Scan Class: A
			Minimum : 0	Maximum : 59	Scale : 1	Offset : 0	Units: Minute	Data Type: (Default)
SyncTAD\PCU-4\ Month	Analog	SyncTAD month tag. Do not modify.	Alarmed: No	Security: *	Device Tag	Node Name: PCU-4	Address: S:19	Scan Class: A
			Minimum : 1	Maximum : 12	Scale : 1	Offset : 0	Units: Month	Data Type: (Default)
SyncTAD\PCU-4\ Second	Analog	SyncTAD second tag. Do not modify.	Alarmed: No	Security: *	Device Tag	Node Name: PCU-4	Address: S:23	Scan Class: A
			Minimum : 0	Maximum : 59	Scale : 1	Offset : 0	Units: Seconds	Data Type: (Default)

Tag Name	Tag Type	Description						
SyncTAD\PCU-4\ Year	Analog	SyncTAD year tag. Do not modify.	Alarmed: No	Security: *	Device Tag	Node Name: PCU-4	Address: S:18	Scan Class: A
			Minimum : 100	Maximum : 9999	Scale : 1	Offset : 0	Units: Year	Data Type: (Default)
SyncTAD\PCU-5\ Day	Analog	SyncTAD day tag. Do not modify.	Alarmed: No	Security: *	Device Tag	Node Name: PCU-5	Address: S:20	Scan Class: A
			Minimum : 1	Maximum : 31	Scale : 1	Offset : 0	Units: Day	Data Type: (Default)
SyncTAD\PCU-5\ Hour	Analog	SyncTAD hour tag. Do not modify.	Alarmed: No	Security: *	Device Tag	Node Name: PCU-5	Address: S:21	Scan Class: A
			Minimum : 0	Maximum : 23	Scale : 1	Offset : 0	Units: Hour	Data Type: (Default)
SyncTAD\PCU-5\ Minute	Analog	SyncTAD minute tag. Do not modify.	Alarmed: No	Security: *	Device Tag	Node Name: PCU-5	Address: S:22	Scan Class: A
			Minimum : 0	Maximum : 59	Scale : 1	Offset : 0	Units: Minute	Data Type: (Default)
SyncTAD\PCU-5\ Month	Analog	SyncTAD month tag. Do not modify.	Alarmed: No	Security: *	Device Tag	Node Name: PCU-5	Address: S:19	Scan Class: A
			Minimum : 1	Maximum : 12	Scale : 1	Offset : 0	Units: Month	Data Type: (Default)
SyncTAD\PCU-5\ Second	Analog	SyncTAD second tag. Do not modify.	Alarmed: No	Security: *	Device Tag	Node Name: PCU-5	Address: S:23	Scan Class: A
			Minimum : 0	Maximum : 59	Scale : 1	Offset : 0	Units: Seconds	Data Type: (Default)
SyncTAD\PCU-5\ Year	Analog	SyncTAD year tag. Do not modify.	Alarmed: No	Security: *	Device Tag	Node Name: PCU-5	Address: S:18	Scan Class: A
			Minimum : 100	Maximum : 9999	Scale : 1	Offset : 0	Units: Year	Data Type: (Default)
system\ AlarmBanner	String	Alarm banner: Information on most recent alarm	Alarmed: No	Security: *	Memory Tag	Initial Value:		
			Length : 82					
system\ AlarmMostRecentDate	String	Date of most recent most severe alarm	Alarmed: No	Security: *	Memory Tag	Initial Value:		
			Length : 32					
system\ AlarmMostRecentLabel	String	Label of most recent most severe alarm	Alarmed: No	Security: *	Memory Tag	Initial Value:		
			Length : 82					
system\ AlarmMostRecentSeverity	Analog	Severity of most recent most severe alarm	Alarmed: No	Security: *	Memory Tag	Initial Value: 0		
			Minimum : 0	Maximum : 8	Scale : 1	Offset : 0	Units:	Data Type: Long Integer
system\ AlarmMostRecentTagDesc	String	Description of tag for most recent most severe alarm	Alarmed: No	Security: *	Memory Tag	Initial Value:		
			Length : 82					
system\ AlarmMostRecentTagname	String	Name of tag for most recent most severe alarm	Alarmed: No	Security: *	Memory Tag	Initial Value:		
			Length : 82					
system\ AlarmMostRecentTime	String	Time of most recent most severe alarm	Alarmed: No	Security: *	Memory Tag	Initial Value:		
			Length : 32					
system\ AlarmMostRecentUnits	String	Units of tag for most recent most severe alarm	Alarmed: No	Security: *	Memory Tag	Initial Value:		
			Length : 82					
system\AlarmStatus	String	Alarm status: number of suppressed and unacknowledged Alarms	Alarmed: No	Security: *	Memory Tag	Initial Value:		
			Length : 20					
system\ AlarmSummaryItems	Analog	Number of Alarms	Alarmed: No	Security: *	Memory Tag	Initial Value: 0		
			Minimum : 0	Maximum : 32767	Scale : 1	Offset : 0	Units:	Data Type: Long Integer
system\ AlarmSummaryItemsUnacked	Analog	Number of unacknowledged Alarms	Alarmed: No	Security: *	Memory Tag	Initial Value: 0		
			Minimum : 0	Maximum : 32767	Scale : 1	Offset : 0	Units:	Data Type: Long Integer
system\ AlarmSuppressedCount	Analog	Number of suppressed Alarmable tags	Alarmed: No	Security: *	Memory Tag	Initial Value: 0		
			Minimum : 0	Maximum : 32767	Scale : 1	Offset : 0	Units:	Data Type: Long Integer
system\BlinkFast	Digital	Changes every 100 ms	Alarmed: No	Security: *	Memory Tag	Initial Value: Off		
			Off Label: Off	On Label: On				

Tag Name	Tag Type	Description						
system\BlinkSlow	Digital	Changes every 500 ms	Alarmed: No	Security: *	Memory Tag	Initial Value: Off		
			Off Label: Off	On Label: On				
system\ ComErrorStringDDE	String		Alarmed: No	Security: *	Memory Tag	Initial Value:		
			Length : 82					
system\ ComErrorStringOPC	String		Alarmed: No	Security: *	Memory Tag	Initial Value:		
			Length : 82					
system\ ComErrorValueDDE	Analog		Alarmed: No	Security: *	Memory Tag	Initial Value: 0		
			Minimum : 0	Maximum : 65535	Scale : 1	Offset : 0	Units:	Data Type: Long Integer
system\ ComErrorValueOPC	Analog		Alarmed: No	Security: *	Memory Tag	Initial Value: 0		
			Minimum : 0	Maximum : 65535	Scale : 1	Offset : 0	Units:	Data Type: Long Integer
system\ ComStatusStringDDE	String		Alarmed: No	Security: *	Memory Tag	Initial Value:		
			Length : 82					
system\ ComStatusStringOPC	String		Alarmed: No	Security: *	Memory Tag	Initial Value:		
			Length : 82					
system\ ComStatusValueDDE	Analog		Alarmed: No	Security: *	Memory Tag	Initial Value: 0		
			Minimum : 0	Maximum : 65535	Scale : 1	Offset : 0	Units:	Data Type: Long Integer
system\ ComStatusValueOPC	Analog		Alarmed: No	Security: *	Memory Tag	Initial Value: 0		
			Minimum : 0	Maximum : 65535	Scale : 1	Offset : 0	Units:	Data Type: Long Integer
system\Date	String	System date string	Alarmed: No Length : 48	Security: *	Memory Tag	Initial Value:		
system\ DateAndTimeInteger	Analog	System date and time integer	Alarmed: No	Security: *	Memory Tag	Initial Value: 0		
			Minimum : 0	Maximum : 2147395600	Scale : 1	Offset : 0	Units:	Data Type: Long Integer
system\ DateAndTimeString	String	System date and time string	Alarmed: No	Security: *	Memory Tag	Initial Value:		
			Length : 48					
system\DayOfMonth	Analog	Day of Month	Alarmed: No Minimum : 1	Security: * Maximum : 31	Memory Tag Scale : 1	Initial Value: 1 Offset : 0	Units:	Data Type: Unsigned Integer
system\DayOfWeek	Analog	Day of Week (Sunday = 1)	Alarmed: No	Security: *	Memory Tag	Initial Value: 1		
			Minimum : 1	Maximum : 7	Scale : 1	Offset : 0	Units:	Data Type: Unsigned Integer
system\DayOfYear	Analog	Day of Year	Alarmed: No Minimum : 1	Security: * Maximum : 366	Memory Tag Scale : 1	Initial Value: 1 Offset : 0	Units:	Data Type: Unsigned Integer
system\Hour	Analog	Hour of day (0 - 23)	Alarmed: No Minimum : 0	Security: * Maximum : 23	Memory Tag Scale : 1	Initial Value: 0 Offset : 0	Units:	Data Type: Unsigned Integer
system\ MemoryB1Meg	Analog	Available memory below 1 Meg, in KB	Alarmed: No	Security: *	Memory Tag	Initial Value: 0		
			Minimum : 0	Maximum : 2147395600	Scale : 1	Offset : 0	Units:	Data Type: Long Integer
system\MemoryGDI	Analog	Percentage of free GDI resources	Alarmed: No	Security: *	Memory Tag	Initial Value: 0		
			Minimum : 0	Maximum : 100	Scale : 1	Offset : 0	Units:	Data Type: Unsigned Integer
system\ MemoryUser	Analog	Percentage of free User resources	Alarmed: No	Security: *	Memory Tag	Initial Value: 0		
			Minimum : 0	Maximum : 100	Scale : 1	Offset : 0	Units:	Data Type: Unsigned Integer
system\ MemoryVirtual	Analog	Available virtual memory in KB	Alarmed: No	Security: *	Memory Tag	Initial Value: 0		
			Minimum : 0	Maximum : 2147395600	Scale : 1	Offset : 0	Units:	Data Type: Long Integer

Tag Name	Tag Type	Description						
system\Minute	Analog	Minutes (0 - 59)	Alarmed: No Minimum : 0	Security: * Maximum : 59	Memory Tag Scale : 1	Initial Value: 0 Offset : 0	Units:	Data Type: Unsigned Integer
system\Month	Analog	Month	Alarmed: No Minimum : 1	Security: * Maximum : 12	Memory Tag Scale : 1	Initial Value: 1 Offset : 0	Units:	Data Type: Unsigned Integer
system\MonthString	String	Month as string	Alarmed: No Length : 48	Security: *	Memory Tag	Initial Value:		
system\Second	Analog	Seconds (0 - 59)	Alarmed: No Minimum : 0	Security: * Maximum : 59	Memory Tag Scale : 1	Initial Value: 0 Offset : 0	Units:	Data Type: Unsigned Integer
system\Time	String	System time string	Alarmed: No Length : 48	Security: *	Memory Tag	Initial Value:		
system\User	String	Currently logged on User	Alarmed: No Length : 82	Security: *	Memory Tag	Initial Value:		
system\Year	Analog	Year	Alarmed: No Minimum : 0	Security: * Maximum : 32000	Memory Tag Scale : 1	Initial Value: 0 Offset : 0	Units:	Data Type: Unsigned Integer
TEST_1	Digital	TEST HOLDING BIT	Alarmed: No Off Label: Off	Security: * On Label: On	Memory Tag	Initial Value: Off		
TEST_2	Digital	TEST HOLDING BIT	Alarmed: No Off Label: Off	Security: * On Label: On	Memory Tag	Initial Value: Off		
TEST_3	Digital	TEST HOLDING BIT	Alarmed: No Off Label: Off	Security: * On Label: On	Memory Tag	Initial Value: Off		
TEST_4	Digital	TEST HOLDING BIT	Alarmed: Yes Off Label: Off	Security: * On Label: On	Memory Tag	Initial Value: Off		
TEST_5	Digital	TEST HOLDING BIT	Alarmed: Yes Off Label: Off	Security: B On Label: On	Memory Tag	Initial Value: Off		
TEST_6	Digital	TEST HOLDING BIT	Alarmed: Yes Off Label: Off	Security: A On Label: On	Memory Tag	Initial Value: Off		
TEST_7	Digital	TEST HOLDING BIT	Alarmed: Yes Off Label: Off	Security: * On Label: On	Memory Tag	Initial Value: Off		
Tnd_test\CurrentFile	Analog	Current datalog file displayed by trend.	Alarmed: No Minimum : -10000	Security: * Maximum : 10000	Memory Tag Scale : 1	Initial Value: 0 Offset : 0	Units:	Data Type: Integer
Tnd_test\ CurrentPen	Analog	Current trend pen selected.	Alarmed: No Minimum : 0	Security: * Maximum : 16	Memory Tag Scale : 1	Initial Value: 0 Offset : 0	Units:	Data Type: Integer
Tnd_test\ NewestFile	Analog	Offset to the newest data log file.	Alarmed: No Minimum : -10000	Security: * Maximum : 10000	Memory Tag Scale : 1	Initial Value: 0 Offset : 0	Units:	Data Type: Integer
Tnd_test\ NewestTime	Analog	Time of newest data available to trend	Alarmed: No Minimum : -2147483647	Security: * Maximum : 2147483647	Memory Tag Scale : 1	Initial Value: 0 Offset : 0	Units:	Data Type: Long Integer
Tnd_test\OldestFile	Analog	Offset to the oldest data log file.	Alarmed: No Minimum : -10000	Security: * Maximum : 10000	Memory Tag Scale : 1	Initial Value: 0 Offset : 0	Units:	Data Type: Integer
Tnd_test\ OldestTime	Analog	Time of oldest data available to trend.	Alarmed: No Minimum : -2147483647	Security: * Maximum : 2147483647	Memory Tag Scale : 1	Initial Value: 0 Offset : 0	Units:	Data Type: Long Integer
Tnd_test\Paused	Digital	Pause trend display at current time	Alarmed: No Off Label: Resumed	Security: * On Label: Paused	Memory Tag	Initial Value: Resumed		
Tnd_test\PenMask	Analog	Enable/disable display of trend pens	Alarmed: No Minimum : -2147483647	Security: * Maximum : 2147483647	Memory Tag Scale : 1	Initial Value: 0 Offset : 0	Units:	Data Type: Long Integer
Tnd_test\StartTime	Analog	Current start time of the trend.	Alarmed: No Minimum : -2147483647	Security: * Maximum : 2147483647	Memory Tag Scale : 1	Initial Value: 0 Offset : 0	Units:	Data Type: Long Integer
Tnd_test\ TimeRange	Analog	Time range in seconds of trend display	Alarmed: No Minimum : -2147483647	Security: * Maximum : 2147483647	Memory Tag Scale : 1	Initial Value: 0 Offset : 0	Units:	Data Type: Long Integer

Tag Name	Tag Type	Description						
Tnd_test\YMag	Analog	Magnification of trend Y axis.	Alarmed: No	Security: *	Memory Tag	Initial Value: 0		
			Minimum : -10000	Maximum : 10000	Scale : 1	Offset : 0	Units:	Data Type: Floating Point
Tnd_test\YOffset	Analog	Offset of trend Y axis.	Alarmed: No	Security: *	Memory Tag	Initial Value: 0		
			Minimum : -10000	Maximum : 10000	Scale : 1	Offset : 0	Units:	Data Type: Floating Point
Trnd_tf\CurrentFile	Analog	Current datalog file displayed by trend.	Alarmed: No	Security: *	Memory Tag	Initial Value: 0		
			Minimum : -10000	Maximum : 10000	Scale : 1	Offset : 0	Units:	Data Type: Integer
Trnd_tf\CurrentPen	Analog	Current trend pen selected.	Alarmed: No	Security: *	Memory Tag	Initial Value: 0		
			Minimum : 0	Maximum : 16	Scale : 1	Offset : 0	Units:	Data Type: Integer
Trnd_tf\NewestFile	Analog	Offset to the newest data log file.	Alarmed: No	Security: *	Memory Tag	Initial Value: 0		
			Minimum : -10000	Maximum : 10000	Scale : 1	Offset : 0	Units:	Data Type: Integer
Trnd_tf\NewestTime	Analog	Time of newest data available to trend	Alarmed: No	Security: *	Memory Tag	Initial Value: 0		
			Minimum : -2147483647	Maximum : 2147483647	Scale : 1	Offset : 0	Units:	Data Type: Long Integer
Trnd_tf\OldestFile	Analog	Offset to the oldest data log file.	Alarmed: No	Security: *	Memory Tag	Initial Value: 0		
			Minimum : -10000	Maximum : 10000	Scale : 1	Offset : 0	Units:	Data Type: Integer
Trnd_tf\OldestTime	Analog	Time of oldest data available to trend.	Alarmed: No	Security: *	Memory Tag	Initial Value: 0		
			Minimum : -2147483647	Maximum : 2147483647	Scale : 1	Offset : 0	Units:	Data Type: Long Integer
Trnd_tf\Paused	Digital	Pause trend display at current time	Alarmed: No	Security: *	Memory Tag	Initial Value: Resumed		
			Off Label: Resumed	On Label: Paused				
Trnd_tf\PenMask	Analog	Enable/disable display of trend pens	Alarmed: No	Security: *	Memory Tag	Initial Value: 0		
			Minimum : -2147483647	Maximum : 2147483647	Scale : 1	Offset : 0	Units:	Data Type: Long Integer
Trnd_tf\StartTime	Analog	Current start time of the trend.	Alarmed: No	Security: *	Memory Tag	Initial Value: 0		
			Minimum : -2147483647	Maximum : 2147483647	Scale : 1	Offset : 0	Units:	Data Type: Long Integer
Trnd_tf\ StartTimeDate	String	Start Date	Alarmed: No	Security: *	Memory Tag	Initial Value:		
			Length : 82					
Trnd_tf\TimeRange	Analog	Time range in seconds of trend display	Alarmed: No	Security: *	Memory Tag	Initial Value: 0		
			Minimum : -2147483647	Maximum : 2147483647	Scale : 1	Offset : 0	Units:	Data Type: Long Integer
Trnd_tf\Updating	Digital	Is datamodel in the process of updating	Alarmed: No	Security: *	Memory Tag	Initial Value: Finished Updating		
			Off Label: Finished Updating	On Label: Updating				
Trnd_tf\YMag	Analog	Magnification of trend Y axis.	Alarmed: No	Security: *	Memory Tag	Initial Value: 0		
			Minimum : -10000	Maximum : 10000	Scale : 1	Offset : 0	Units:	Data Type: Floating Point
Trnd_tf\YOffset	Analog	Offset of trend Y axis.	Alarmed: No	Security: *	Memory Tag	Initial Value: 0		
			Minimum : -10000	Maximum : 10000	Scale : 1	Offset : 0	Units:	Data Type: Floating Point
Trnd_tr\CurrentFile	Analog	Current datalog file displayed by trend.	Alarmed: No	Security: *	Memory Tag	Initial Value: 0		
			Minimum : -10000	Maximum : 10000	Scale : 1	Offset : 0	Units:	Data Type: Integer
Trnd_tr\CurrentPen	Analog	Current trend pen selected.	Alarmed: No	Security: *	Memory Tag	Initial Value: 0		
			Minimum : 0	Maximum : 16	Scale : 1	Offset : 0	Units:	Data Type: Integer
Trnd_tr\NewestFile	Analog	Offset to the newest data log file.	Alarmed: No	Security: *	Memory Tag	Initial Value: 0		
			Minimum : -10000	Maximum : 10000	Scale : 1	Offset : 0	Units:	Data Type: Integer
Trnd_tr\NewestTime	Analog	Time of newest data available to trend	Alarmed: No	Security: *	Memory Tag	Initial Value: 0		
			Minimum : -2147483647	Maximum : 2147483647	Scale : 1	Offset : 0	Units:	Data Type: Long Integer
Trnd_tr\OldestFile	Analog	Offset to the oldest data log file.	Alarmed: No	Security: *	Memory Tag	Initial Value: 0		
			Minimum : -10000	Maximum : 10000	Scale : 1	Offset : 0	Units:	Data Type: Integer

Tag Name	Tag Type	Description						
Trnd_tr\OldestTime	Analog	Time of oldest data available to trend.	Alarmed: No	Security: *	Memory Tag	Initial Value: 0		
			Minimum : -2147483647	Maximum : 2147483647	Scale : 1	Offset : 0	Units:	Data Type: Long Integer
Trnd_tr\Paused	Digital	Pause trend display at current time	Alarmed: No	Security: *	Memory Tag	Initial Value: Resumed		
			Off Label: Resumed	On Label: Paused				
Trnd_tr\PenMask	Analog	Enable/disable display of trend pens	Alarmed: No	Security: *	Memory Tag	Initial Value: 0		
			Minimum : -2147483647	Maximum : 2147483647	Scale : 1	Offset : 0	Units:	Data Type: Long Integer
Trnd_tr\StartTime	Analog	Current start time of the trend.	Alarmed: No	Security: *	Memory Tag	Initial Value: 0		
			Minimum : -2147483647	Maximum : 2147483647	Scale : 1	Offset : 0	Units:	Data Type: Long Integer
Trnd_tr\ StartTimeDate	String	Start Date	Alarmed: No	Security: *	Memory Tag	Initial Value:		
			Length : 82					
Trnd_tr\TimeRange	Analog	Time range in seconds of trend display	Alarmed: No	Security: *	Memory Tag	Initial Value: 0		
			Minimum : -2147483647	Maximum : 2147483647	Scale : 1	Offset : 0	Units:	Data Type: Long Integer
Trnd_tr\Updating	Digital	Is datamodel in the process of updating	Alarmed: No	Security: *	Memory Tag	Initial Value: Finished Updating		
			Off Label: Finished Updating	On Label: Updating				
Trnd_tr\YMag	Analog	Magnification of trend Y axis.	Alarmed: No	Security: *	Memory Tag	Initial Value: 0		
			Minimum : -10000	Maximum : 10000	Scale : 1	Offset : 0	Units:	Data Type: Floating Point
Trnd_tr\YOffset	Analog	Offset of trend Y axis.	Alarmed: No	Security: *	Memory Tag	Initial Value: 0		
			Minimum : -10000	Maximum : 10000	Scale : 1	Offset : 0	Units:	Data Type: Floating Point
VALVE_NAME	String	VALVE NAME FOR DISPLAY IN THE VALVE POP-UPS	Alarmed: No	Security: *	Memory Tag	Initial Value: VALVE NAME		
			Length : 10					

1.4.3 System\Tag Database\Alarmed Tag List

Number of Alarmed Tags = 241 : 0 Analog Tags, 241 Digital Tags

Tag Name	Tag Type	Description					
PCU-1\BATT_BAD_PLC 1	Digital	PLC-1 BATTERY IS BAD OR MISSING	Alarm Type: On	Out of Alarm Label:	Alarm Identification:	Alarm Acknowledge: PCU-1\BATT_BAD_PLC 1_ACK (Auto Reset)	Alarm Handshake:
			Severity: 2	Alarm Label:		In Alarm Messages: User Defaults	
			Out of Alarm Messages: User Defaults			Alarm Acknowledge Messages: User Defaults	
PCU-1\COM-1_OCS	Digital	COMMUN. WITH OCS IGNORED	Alarm Type: On	Out of Alarm Label:	Alarm Identification:	Alarm Acknowledge: PCU-1\COM-1_OCS_A CK (Auto Reset)	Alarm Handshake:
			Severity: 1	Alarm Label:		In Alarm Messages: User Defaults	
			Out of Alarm Messages: User Defaults			Alarm Acknowledge Messages: User Defaults	
PCU-1\COM-12	Digital	COMMUN. WITH PCU-2 IGNORED	Alarm Type: On	Out of Alarm Label:	Alarm Identification:	Alarm Acknowledge: PCU-1\COM-12_ACK (Auto Reset)	Alarm Handshake:
			Severity: 1	Alarm Label:		In Alarm Messages: User Defaults	
			Out of Alarm Messages: User Defaults			Alarm Acknowledge Messages: User Defaults	
PCU-1\COM-13	Digital	COMMUN. WITH PCU-3 IGNORED	Alarm Type: On	Out of Alarm Label:	Alarm Identification:	Alarm Acknowledge: PCU-1\COM-13_ACK (Auto Reset)	Alarm Handshake:
			Severity: 1	Alarm Label:		In Alarm Messages: User Defaults	
			Out of Alarm Messages: User Defaults			Alarm Acknowledge Messages: User Defaults	

Tag Name	Tag Type	Description					
PCU-1\COM-14	Digital	COMMUN. WITH PCU-4 IGNORED	Alarm Type: On Severity: 1 Out of Alarm Messages: User Defaults	Out of Alarm Label: Alarm Label:	Alarm Identification:	Alarm Acknowledge: PCU-1\COM-14_ACK (Auto Reset) In Alarm Messages: User Defaults Alarm Acknowledge Messages: User Defaults	Alarm Handshake:
PCU-1\COM-15	Digital	COMMUN. WITH PCU-5 IGNORED	Alarm Type: On Severity: 1 Out of Alarm Messages: User Defaults	Out of Alarm Label: Alarm Label:	Alarm Identification:	Alarm Acknowledge: PCU-1\COM-15_ACK (Auto Reset) In Alarm Messages: User Defaults Alarm Acknowledge Messages: User Defaults	Alarm Handshake:
PCU-1\COM-OCS_1	Digital	COMMUN. WITH PCU-1 IGNORED - DETECTED AT OCS	Alarm Type: On Severity: 1 Out of Alarm Messages: User Defaults	Out of Alarm Label: Alarm Label:	Alarm Identification:	Alarm Acknowledge: PCU-1\COM-OCS_1_ACK (Auto Reset) In Alarm Messages: User Defaults Alarm Acknowledge Messages: User Defaults	Alarm Handshake:
PCU-1\COM_OCS_1_MNT	Digital	Communiations failure with the PLC detected in this OIT	Alarm Type: On Severity: 1 Out of Alarm Messages: System Defaults	Out of Alarm Label: Alarm Label:	Alarm Identification:	Alarm Acknowledge: In Alarm Messages: System Defaults Alarm Acknowledge Messages: System Defaults	Alarm Handshake:
PCU-1\COM_OCS_1_OPR	Digital	Communiations failure with the PLC detected in this OIT	Alarm Type: On Severity: 1 Out of Alarm Messages: System Defaults	Out of Alarm Label: Alarm Label:	Alarm Identification:	Alarm Acknowledge: In Alarm Messages: System Defaults Alarm Acknowledge Messages: System Defaults	Alarm Handshake:
PCU-1\FAL-P3100A	Digital	FLUSH PUMP P-3100A LOW FLOW Y-90.1	Alarm Type: On Severity: 1 Out of Alarm Messages: User Defaults	Out of Alarm Label: Alarm Label:	Alarm Identification:	Alarm Acknowledge: PCU-1\FAL-P3100A_ACK (Auto Reset) In Alarm Messages: User Defaults Alarm Acknowledge Messages: User Defaults	Alarm Handshake:
PCU-1\FI-302C-1_A	Digital	PCU-1 INPUT ANALOG OVER OR UNDER RANGE ALARM	Alarm Type: On Severity: 2 Out of Alarm Messages: User Defaults	Out of Alarm Label: Alarm Label:	Alarm Identification:	Alarm Acknowledge: PCU-1\FI-302C-1_A_ACK (Auto Reset) In Alarm Messages: User Defaults Alarm Acknowledge Messages: User Defaults	Alarm Handshake:
PCU-1\FI-367A_A	Digital	PCU-1 INPUT ANALOG OVER OR UNDER RANGE ALARM	Alarm Type: On Severity: 2 Out of Alarm Messages: User Defaults	Out of Alarm Label: Alarm Label:	Alarm Identification:	Alarm Acknowledge: PCU-1\FI-367A_A_ACK (Auto Reset) In Alarm Messages: User Defaults Alarm Acknowledge Messages: User Defaults	Alarm Handshake:
PCU-1\FIC-302C-2_A	Digital	PCU-1 INPUT ANALOG OVER OR UNDER RANGE ALARM	Alarm Type: On Severity: 2 Out of Alarm Messages: User Defaults	Out of Alarm Label: Alarm Label:	Alarm Identification:	Alarm Acknowledge: PCU-1\FIC-302C-2_A_ACK (Auto Reset) In Alarm Messages: User Defaults Alarm Acknowledge Messages: User Defaults	Alarm Handshake:
PCU-1\IAH-350	Digital	SY-101-WT-P-350 TRANSFER PUMP HIGH CURRENT ALARM	Alarm Type: On Severity: 1 Out of Alarm Messages: System Defaults	Out of Alarm Label: Alarm Label:	Alarm Identification:	Alarm Acknowledge: PCU-1\IAH-350_ACK (Auto Reset) In Alarm Messages: System Defaults Alarm Acknowledge Messages: System Defaults	Alarm Handshake:
PCU-1\II-3102_A	Digital	PCU-1 INPUT ANALOG OVER OR UNDER RANGE ALARM	Alarm Type: On Severity: 2	Out of Alarm Label: Alarm Label:	Alarm Identification:	Alarm Acknowledge: PCU-1\II-3102_A_ACK (Auto Reset) In Alarm Messages: User Defaults	Alarm Handshake:

Tag Name	Tag Type	Description					
			Out of Alarm Messages: User Defaults			Alarm Acknowledge Messages: User Defaults	
PCU-1\II-350_A	Digital	PCU-1 INPUT ANALOG OVER OR UNDER RANGE ALARM	Alarm Type: On Severity: 2 Out of Alarm Messages: User Defaults	Out of Alarm Label: Alarm Label:	Alarm Identification:	Alarm Acknowledge: PCU-1\II-350_A_ACK (Auto Reset) In Alarm Messages: User Defaults Alarm Acknowledge Messages: User Defaults	Alarm Handshake:
PCU-1\K-LA-365	Digital	TRANSFER PUMP SY-101 PUMP PACKAGE LEAK ALARM	Alarm Type: Off Severity: 1 Out of Alarm Messages: System Defaults	Out of Alarm Label: Alarm Label:	Alarm Identification:	Alarm Acknowledge: PCU-1\K-LA-365_ACK (Auto Reset) In Alarm Messages: System Defaults Alarm Acknowledge Messages: System Defaults	Alarm Handshake:
PCU-1\LAL-302C1	Digital	TANK TK-302C-1 LEVEL BIT Y-90.1	Alarm Type: On Severity: 1 Out of Alarm Messages: User Defaults	Out of Alarm Label: Alarm Label:	Alarm Identification:	Alarm Acknowledge: PCU-1\LAL-302C1_ACK (Auto Reset) In Alarm Messages: User Defaults Alarm Acknowledge Messages: User Defaults	Alarm Handshake:
PCU-1\LAL-3101	Digital	TANK 241-SY-101 LOW LEVEL	Alarm Type: On Severity: 1 Out of Alarm Messages: System Defaults	Out of Alarm Label: Alarm Label:	Alarm Identification:	Alarm Acknowledge: PCU-1\LAL-3101_ACK (Auto Reset) In Alarm Messages: System Defaults Alarm Acknowledge Messages: System Defaults	Alarm Handshake:
PCU-1\LAL-3102	Digital	TANK 241-SY-102 LOW LEVEL	Alarm Type: On Severity: 1 Out of Alarm Messages: User Defaults	Out of Alarm Label: Alarm Label:	Alarm Identification:	Alarm Acknowledge: PCU-1\LAL-3102_ACK (Auto Reset) In Alarm Messages: User Defaults Alarm Acknowledge Messages: User Defaults	Alarm Handshake:
PCU-1\LI-302C-1_A	Digital	PCU-1 INPUT ANALOG OVER OR UNDER RANGE ALARM	Alarm Type: On Severity: 2 Out of Alarm Messages: User Defaults	Out of Alarm Label: Alarm Label:	Alarm Identification:	Alarm Acknowledge: PCU-1\LI-302C-1_A_AC K (Auto Reset) In Alarm Messages: User Defaults Alarm Acknowledge Messages: User Defaults	Alarm Handshake:
PCU-1\LI-3101_A	Digital	PCU-1 INPUT ANALOG OVER OR UNDER RANGE ALARM	Alarm Type: On Severity: 2 Out of Alarm Messages: User Defaults	Out of Alarm Label: Alarm Label:	Alarm Identification:	Alarm Acknowledge: PCU-1\LI-3101_A_ACK (Auto Reset) In Alarm Messages: User Defaults Alarm Acknowledge Messages: User Defaults	Alarm Handshake:
PCU-1\LI-3102_A	Digital	PCU-1 INPUT ANALOG OVER OR UNDER RANGE ALARM	Alarm Type: On Severity: 2 Out of Alarm Messages: User Defaults	Out of Alarm Label: Alarm Label:	Alarm Identification:	Alarm Acknowledge: PCU-1\LI-3102_A_ACK (Auto Reset) In Alarm Messages: User Defaults Alarm Acknowledge Messages: User Defaults	Alarm Handshake:
PCU-1\PAH-350	Digital	SY-101-WT-P-350 TRANSFER PUMP HIGH DISCHARGE PRESSURE ALARM	Alarm Type: On Severity: 1 Out of Alarm Messages: System Defaults	Out of Alarm Label: Alarm Label:	Alarm Identification:	Alarm Acknowledge: PCU-1\PAH-350_ACK (Auto Reset) In Alarm Messages: System Defaults Alarm Acknowledge Messages: System Defaults	Alarm Handshake:
PCU-1\PI-368_A	Digital	PCU-1 INPUT ANALOG OVER OR UNDER RANGE ALARM	Alarm Type: On Severity: 2 Out of Alarm Messages: User Defaults	Out of Alarm Label: Alarm Label:	Alarm Identification:	Alarm Acknowledge: PCU-1\PI-368_A_ACK (Auto Reset) In Alarm Messages: User Defaults Alarm Acknowledge Messages: User Defaults	Alarm Handshake:

Tag Name	Tag Type	Description					
PCU-1\SI-350_A	Digital	PCU-1 INPUT ANALOG OVER OR UNDER RANGE ALARM	Alarm Type: On Severity: 2 Out of Alarm Messages: User Defaults	Out of Alarm Label: Alarm Label:	Alarm Identification:	Alarm Acknowledge: PCU-1\SI-350_A_ACK (Auto Reset) In Alarm Messages: User Defaults Alarm Acknowledge Messages: User Defaults	Alarm Handshake:
PCU-1\TAH-302C-1A	Digital	CIRCULATION HEATER #1 HTR-302C-1 OUTLET TEMP [OFF = ALARM]	Alarm Type: Off Severity: 1 Out of Alarm Messages: User Defaults	Out of Alarm Label: Alarm Label:	Alarm Identification:	Alarm Acknowledge: PCU-1\TAH-302C-1A_ACK (Auto Reset) In Alarm Messages: User Defaults Alarm Acknowledge Messages: User Defaults	Alarm Handshake:
PCU-1\TAH-302C-1B	Digital	CIRCULATION HEATER #2 HTR-302C-2 OUTLET TEMP [OFF = ALARM]	Alarm Type: Off Severity: 1 Out of Alarm Messages: User Defaults	Out of Alarm Label: Alarm Label:	Alarm Identification:	Alarm Acknowledge: PCU-1\TAH-302C-1B_ACK (Auto Reset) In Alarm Messages: User Defaults Alarm Acknowledge Messages: User Defaults	Alarm Handshake:
PCU-1\TAH_CAB_PLC1	Digital	PLC-1 CABINET HIGH TEMPERATURE [OFF = ALARM]	Alarm Type: Off Severity: 2 Out of Alarm Messages: User Defaults	Out of Alarm Label: Alarm Label:	Alarm Identification:	Alarm Acknowledge: PCU-1\TAH_CAB_PLC1_ACK (Auto Reset) In Alarm Messages: User Defaults Alarm Acknowledge Messages: User Defaults	Alarm Handshake:
PCU-1\TI-302C-1_A	Digital	PCU-1 INPUT THERMOCOUPLE OVER OR UNDER RANGE ALARM	Alarm Type: On Severity: 2 Out of Alarm Messages: User Defaults	Out of Alarm Label: Alarm Label:	Alarm Identification:	Alarm Acknowledge: PCU-1\TI-302C-1_A_ACK (Auto Reset) In Alarm Messages: User Defaults Alarm Acknowledge Messages: User Defaults	Alarm Handshake:
PCU-1\TI-302C-2_A	Digital	PCU-1 INPUT THERMOCOUPLE OVER OR UNDER RANGE ALARM	Alarm Type: On Severity: 2 Out of Alarm Messages: User Defaults	Out of Alarm Label: Alarm Label:	Alarm Identification:	Alarm Acknowledge: PCU-1\TI-302C-2_A_ACK (Auto Reset) In Alarm Messages: User Defaults Alarm Acknowledge Messages: User Defaults	Alarm Handshake:
PCU-1\XA-058W	Digital	200-W MASTER SHUTDOWN CIRCUIT ACTIVATED Y-77.1	Alarm Type: On Severity: 1 Out of Alarm Messages: User Defaults	Out of Alarm Label: Alarm Label:	Alarm Identification:	Alarm Acknowledge: PCU-1\XA-058W_ACK (Auto Reset) In Alarm Messages: User Defaults Alarm Acknowledge Messages: User Defaults	Alarm Handshake:
PCU-1\XA-350	Digital	SY-101-WT-P-350 TRANSFER PUMP FAILURE	Alarm Type: On Severity: 1 Out of Alarm Messages: System Defaults	Out of Alarm Label: Alarm Label:	Alarm Identification:	Alarm Acknowledge: PCU-1\XA-350_ACK (Auto Reset) In Alarm Messages: System Defaults Alarm Acknowledge Messages: System Defaults	Alarm Handshake:
PCU-2\BATT_BAD_PLC2	Digital	PLC-2 BATTERY IS BAD OR MISSING	Alarm Type: On Severity: 2 Out of Alarm Messages: User Defaults	Out of Alarm Label: Alarm Label:	Alarm Identification:	Alarm Acknowledge: PCU-2\BATT_BAD_PLC2_ACK (Auto Reset) In Alarm Messages: User Defaults Alarm Acknowledge Messages: User Defaults	Alarm Handshake:
PCU-2\COM-2_OCS	Digital	COMMUN. WITH OCS IGNORED	Alarm Type: On Severity: 1 Out of Alarm Messages: User Defaults	Out of Alarm Label: Alarm Label:	Alarm Identification:	Alarm Acknowledge: PCU-2\COM-2_OCS_ACK (Auto Reset) In Alarm Messages: User Defaults Alarm Acknowledge Messages: User Defaults	Alarm Handshake:

Tag Name	Tag Type	Description					
PCU-2\COM-21	Digital	COMMUN. WITH PCU-1 IGNORED	Alarm Type: On Severity: 1 Out of Alarm Messages: User Defaults	Out of Alarm Label: Alarm Label:	Alarm Identification:	Alarm Acknowledge: PCU-2\COM-21_ACK (Auto Reset) In Alarm Messages: User Defaults Alarm Acknowledge Messages: User Defaults	Alarm Handshake:
PCU-2\COM-23	Digital	COMMUN. WITH PCU-3 IGNORED	Alarm Type: On Severity: 1 Out of Alarm Messages: User Defaults	Out of Alarm Label: Alarm Label:	Alarm Identification:	Alarm Acknowledge: PCU-2\COM-23_ACK (Auto Reset) In Alarm Messages: User Defaults Alarm Acknowledge Messages: User Defaults	Alarm Handshake:
PCU-2\COM-24	Digital	COMMUN. WITH PCU-4 IGNORED	Alarm Type: On Severity: 1 Out of Alarm Messages: User Defaults	Out of Alarm Label: Alarm Label:	Alarm Identification:	Alarm Acknowledge: PCU-2\COM-24_ACK (Auto Reset) In Alarm Messages: User Defaults Alarm Acknowledge Messages: User Defaults	Alarm Handshake:
PCU-2\COM-25	Digital	COMMUN. WITH PCU-5 IGNORED	Alarm Type: On Severity: 1 Out of Alarm Messages: User Defaults	Out of Alarm Label: Alarm Label:	Alarm Identification:	Alarm Acknowledge: PCU-2\COM-25_ACK (Auto Reset) In Alarm Messages: User Defaults Alarm Acknowledge Messages: User Defaults	Alarm Handshake:
PCU-2\COM-OCS_2	Digital	COMMUN. WITH PCU-2 IGNORED - DETECTED AT OCS	Alarm Type: On Severity: 1 Out of Alarm Messages: User Defaults	Out of Alarm Label: Alarm Label:	Alarm Identification:	Alarm Acknowledge: PCU-2\COM-OCS_2_ACK (Auto Reset) In Alarm Messages: User Defaults Alarm Acknowledge Messages: User Defaults	Alarm Handshake:
PCU-2\COM_OCS_2_MNT	Digital	Communiations failure with the PLC detected in this OIT	Alarm Type: On Severity: 1 Out of Alarm Messages: System Defaults	Out of Alarm Label: Alarm Label:	Alarm Identification:	Alarm Acknowledge: In Alarm Messages: System Defaults Alarm Acknowledge Messages: System Defaults	Alarm Handshake:
PCU-2\COM_OCS_2_OPR	Digital	Communiations failure with the PLC detected in this OIT	Alarm Type: On Severity: 1 Out of Alarm Messages: System Defaults	Out of Alarm Label: Alarm Label:	Alarm Identification:	Alarm Acknowledge: In Alarm Messages: System Defaults Alarm Acknowledge Messages: System Defaults	Alarm Handshake:
PCU-2\FAH-3125A1	Digital	LOW AIR FLOW PUMP SEAL PUMP P-3125A [OFF = ALARM] Y76	Alarm Type: Off Severity: 1 Out of Alarm Messages: User Defaults	Out of Alarm Label: Alarm Label:	Alarm Identification:	Alarm Acknowledge: PCU-2\FAH-3125A1_ACK (Auto Reset) In Alarm Messages: User Defaults Alarm Acknowledge Messages: User Defaults	Alarm Handshake:
PCU-2\FAH-3125A2	Digital	LOW AIR FLOW PUMP SEAL PUMP P-3125A [OFF = ALARM] Y76	Alarm Type: Off Severity: 1 Out of Alarm Messages: User Defaults	Out of Alarm Label: Alarm Label:	Alarm Identification:	Alarm Acknowledge: PCU-2\FAH-3125A2_ACK (Auto Reset) In Alarm Messages: User Defaults Alarm Acknowledge Messages: User Defaults	Alarm Handshake:
PCU-2\FAH-3125B1	Digital	LOW AIR FLOW PUMP SEAL PUMP P-3125B [OFF = ALARM] Y76	Alarm Type: Off Severity: 1 Out of Alarm Messages: User Defaults	Out of Alarm Label: Alarm Label:	Alarm Identification:	Alarm Acknowledge: PCU-2\FAH-3125B1_ACK (Auto Reset) In Alarm Messages: User Defaults Alarm Acknowledge Messages: User Defaults	Alarm Handshake:
PCU-2\FAH-3125B2	Digital	LOW AIR FLOW PUMP SEAL PUMP P-3125B [OFF = ALARM] Y76	Alarm Type: Off Severity: 1	Out of Alarm Label: Alarm Label:	Alarm Identification:	Alarm Acknowledge: PCU-2\FAH-3125B2_ACK (Auto Reset) In Alarm Messages: User Defaults	Alarm Handshake:

Tag Name	Tag Type	Description					
			Out of Alarm Messages: User Defaults			Alarm Acknowledge Messages: User Defaults	
PCU-2\FIC-3125_A	Digital	PCU-2 INPUT ANALOG OVER OR UNDER RANGE ALARM	Alarm Type: On Severity: 2 Out of Alarm Messages: User Defaults	Out of Alarm Label: Alarm Label:	Alarm Identification:	Alarm Acknowledge: PCU-2\FIC-3125_A_ACK (Auto Reset) In Alarm Messages: User Defaults Alarm Acknowledge Messages: User Defaults	Alarm Handshake:
PCU-2\LAL-3125A1	Digital	PUMP P-3125A LOW OIL LEVEL [OFF = ALARM] Y76	Alarm Type: Off Severity: 1 Out of Alarm Messages: User Defaults	Out of Alarm Label: Alarm Label:	Alarm Identification:	Alarm Acknowledge: PCU-2\LAL-3125A1_ACK (Auto Reset) In Alarm Messages: User Defaults Alarm Acknowledge Messages: User Defaults	Alarm Handshake:
PCU-2\LAL-3125A2	Digital	PUMP P-3125A LOW OIL LEVEL [OFF = ALARM] Y76	Alarm Type: Off Severity: 1 Out of Alarm Messages: User Defaults	Out of Alarm Label: Alarm Label:	Alarm Identification:	Alarm Acknowledge: PCU-2\LAL-3125A2_ACK (Auto Reset) In Alarm Messages: User Defaults Alarm Acknowledge Messages: User Defaults	Alarm Handshake:
PCU-2\LAL-3125B1	Digital	PUMP P-3125B LOW OIL LEVEL [OFF = ALARM] Y76	Alarm Type: Off Severity: 1 Out of Alarm Messages: User Defaults	Out of Alarm Label: Alarm Label:	Alarm Identification:	Alarm Acknowledge: PCU-2\LAL-3125B1_ACK (Auto Reset) In Alarm Messages: User Defaults Alarm Acknowledge Messages: User Defaults	Alarm Handshake:
PCU-2\LAL-3125B2	Digital	PUMP P-3125B LOW OIL LEVEL [OFF = ALARM] Y76	Alarm Type: Off Severity: 1 Out of Alarm Messages: User Defaults	Out of Alarm Label: Alarm Label:	Alarm Identification:	Alarm Acknowledge: PCU-2\LAL-3125B2_ACK (Auto Reset) In Alarm Messages: User Defaults Alarm Acknowledge Messages: User Defaults	Alarm Handshake:
PCU-2\LDA-3150	Digital	LEAK DETECTED AT DIVERSION BOX 6241-A SUMP Y-72.1	Alarm Type: On Severity: 1 Out of Alarm Messages: User Defaults	Out of Alarm Label: Alarm Label:	Alarm Identification:	Alarm Acknowledge: PCU-2\LDA-3150_ACK (Auto Reset) In Alarm Messages: User Defaults Alarm Acknowledge Messages: User Defaults	Alarm Handshake:
PCU-2\LDA-3160	Digital	6241-A ENCASEMENT LEAK DETECTION [OFF = ALARM] Y72	Alarm Type: Off Severity: 1 Out of Alarm Messages: User Defaults	Out of Alarm Label: Alarm Label:	Alarm Identification:	Alarm Acknowledge: PCU-2\LDA-3160_ACK (Auto Reset) In Alarm Messages: User Defaults Alarm Acknowledge Messages: User Defaults	Alarm Handshake:
PCU-2\PAH-3125A	Digital	BOOSTER PUMP HIGH INLET PRESSURE Y-75.1	Alarm Type: On Severity: 1 Out of Alarm Messages: User Defaults	Out of Alarm Label: Alarm Label:	Alarm Identification:	Alarm Acknowledge: PCU-2\PAH-3125A_ACK (Auto Reset) In Alarm Messages: User Defaults Alarm Acknowledge Messages: User Defaults	Alarm Handshake:
PCU-2\PAH-3125B	Digital	BOOSTER PUMP HIGH INLET PRESSURE Y-75.1	Alarm Type: On Severity: 1 Out of Alarm Messages: User Defaults	Out of Alarm Label: Alarm Label:	Alarm Identification:	Alarm Acknowledge: PCU-2\PAH-3125B_ACK (Auto Reset) In Alarm Messages: User Defaults Alarm Acknowledge Messages: User Defaults	Alarm Handshake:
PCU-2\PAH-3125C	Digital	BOOSTER PUMP HIGH DISCHARGE PRESSURE Y-78.1	Alarm Type: On Severity: 1 Out of Alarm Messages: User Defaults	Out of Alarm Label: Alarm Label:	Alarm Identification:	Alarm Acknowledge: PCU-2\PAH-3125C_ACK (Auto Reset) In Alarm Messages: User Defaults Alarm Acknowledge Messages: User Defaults	Alarm Handshake:

Tag Name	Tag Type	Description					
PCU-2\PAH-3125D	Digital	BOOSTER PUMP HIGH DISCHARGE PRESSURE Y-78.1	Alarm Type: On Severity: 1 Out of Alarm Messages: User Defaults	Out of Alarm Label: Alarm Label:	Alarm Identification:	Alarm Acknowledge: PCU-2\PAH-3125D_ACK (Auto Reset) In Alarm Messages: User Defaults Alarm Acknowledge Messages: User Defaults	Alarm Handshake:
PCU-2\PAH-3173	Digital	VALVE SOV-3173A/B FAILURE Y-73.1	Alarm Type: On Severity: 1 Out of Alarm Messages: User Defaults	Out of Alarm Label: Alarm Label:	Alarm Identification:	Alarm Acknowledge: PCU-2\PAH-3173_ACK (Auto Reset) In Alarm Messages: User Defaults Alarm Acknowledge Messages: User Defaults	Alarm Handshake:
PCU-2\PAH-3182	Digital	VALVE SOV-3182A/B FAILURE	Alarm Type: On Severity: 1 Out of Alarm Messages: User Defaults	Out of Alarm Label: Alarm Label:	Alarm Identification:	Alarm Acknowledge: PCU-2\PAH-3182_ACK (Auto Reset) In Alarm Messages: User Defaults Alarm Acknowledge Messages: User Defaults	Alarm Handshake:
PCU-2\PAH-3183	Digital	VALVE SOV-3183A/B FAILURE	Alarm Type: On Severity: 1 Out of Alarm Messages: User Defaults	Out of Alarm Label: Alarm Label:	Alarm Identification:	Alarm Acknowledge: PCU-2\PAH-3183_ACK (Auto Reset) In Alarm Messages: User Defaults Alarm Acknowledge Messages: User Defaults	Alarm Handshake:
PCU-2\PAL-3100A	Digital	LOW COMPRESSOR SA-CMP-3101A PRESSURE	Alarm Type: On Severity: 1 Out of Alarm Messages: User Defaults	Out of Alarm Label: Alarm Label:	Alarm Identification:	Alarm Acknowledge: PCU-2\PAL-3100A_ACK (Auto Reset) In Alarm Messages: User Defaults Alarm Acknowledge Messages: User Defaults	Alarm Handshake:
PCU-2\PAL-3125A	Digital	BOOSTER PUMP LOW INLET PRESSURE Y-74.1	Alarm Type: On Severity: 1 Out of Alarm Messages: User Defaults	Out of Alarm Label: Alarm Label:	Alarm Identification:	Alarm Acknowledge: PCU-2\PAL-3125A_ACK (Auto Reset) In Alarm Messages: User Defaults Alarm Acknowledge Messages: User Defaults	Alarm Handshake:
PCU-2\PAL-3125A1	Digital	PUMP P-3125A SEAL FAILURE [OFF = ALARM] Y76	Alarm Type: Off Severity: 1 Out of Alarm Messages: User Defaults	Out of Alarm Label: Alarm Label:	Alarm Identification:	Alarm Acknowledge: PCU-2\PAL-3125A1_ACK (Auto Reset) In Alarm Messages: User Defaults Alarm Acknowledge Messages: User Defaults	Alarm Handshake:
PCU-2\PAL-3125A2	Digital	PUMP P-3125A SEAL FAILURE [OFF = ALARM] Y76	Alarm Type: Off Severity: 1 Out of Alarm Messages: User Defaults	Out of Alarm Label: Alarm Label:	Alarm Identification:	Alarm Acknowledge: PCU-2\PAL-3125A2_ACK (Auto Reset) In Alarm Messages: User Defaults Alarm Acknowledge Messages: User Defaults	Alarm Handshake:
PCU-2\PAL-3125B	Digital	BOOSTER PUMP LOW INLET PRESSURE Y-74.2	Alarm Type: On Severity: 1 Out of Alarm Messages: User Defaults	Out of Alarm Label: Alarm Label:	Alarm Identification:	Alarm Acknowledge: PCU-2\PAL-3125B_ACK (Auto Reset) In Alarm Messages: User Defaults Alarm Acknowledge Messages: User Defaults	Alarm Handshake:
PCU-2\PAL-3125B1	Digital	PUMP P-3125B SEAL FAILURE [OFF = ALARM] Y76	Alarm Type: Off Severity: 1 Out of Alarm Messages: User Defaults	Out of Alarm Label: Alarm Label:	Alarm Identification:	Alarm Acknowledge: PCU-2\PAL-3125B1_ACK (Auto Reset) In Alarm Messages: User Defaults Alarm Acknowledge Messages: User Defaults	Alarm Handshake:
PCU-2\PAL-3125B2	Digital	PUMP P-3125B SEAL FAILURE [OFF = ALARM] Y76	Alarm Type: Off Severity: 1	Out of Alarm Label: Alarm Label:	Alarm Identification:	Alarm Acknowledge: PCU-2\PAL-3125B2_ACK (Auto Reset) In Alarm Messages: User Defaults	Alarm Handshake:

Tag Name	Tag Type	Description					
			Out of Alarm Messages: User Defaults			Alarm Acknowledge Messages: User Defaults	
PCU-2\PI-3125A_A	Digital	PCU-2 INPUT ANALOG OVER OR UNDER RANGE ALARM	Alarm Type: On Severity: 2 Out of Alarm Messages: User Defaults	Out of Alarm Label: Alarm Label:	Alarm Identification:	Alarm Acknowledge: PCU-2\PI-3125A_A_ACK (Auto Reset) In Alarm Messages: User Defaults Alarm Acknowledge Messages: User Defaults	Alarm Handshake:
PCU-2\PI-3125B_A	Digital	PCU-2 INPUT ANALOG OVER OR UNDER RANGE ALARM	Alarm Type: On Severity: 2 Out of Alarm Messages: User Defaults	Out of Alarm Label: Alarm Label:	Alarm Identification:	Alarm Acknowledge: PCU-2\PI-3125B_A_ACK (Auto Reset) In Alarm Messages: User Defaults Alarm Acknowledge Messages: User Defaults	Alarm Handshake:
PCU-2\PI-3125C_A	Digital	PCU-2 INPUT ANALOG OVER OR UNDER RANGE ALARM	Alarm Type: On Severity: 2 Out of Alarm Messages: User Defaults	Out of Alarm Label: Alarm Label:	Alarm Identification:	Alarm Acknowledge: PCU-2\PI-3125C_A_ACK (Auto Reset) In Alarm Messages: User Defaults Alarm Acknowledge Messages: User Defaults	Alarm Handshake:
PCU-2\PI-3125D_A	Digital	PCU-2 INPUT ANALOG OVER OR UNDER RANGE ALARM	Alarm Type: On Severity: 2 Out of Alarm Messages: User Defaults	Out of Alarm Label: Alarm Label:	Alarm Identification:	Alarm Acknowledge: PCU-2\PI-3125D_A_ACK (Auto Reset) In Alarm Messages: User Defaults Alarm Acknowledge Messages: User Defaults	Alarm Handshake:
PCU-2\PI-3125E_A	Digital	PCU-2 INPUT ANALOG OVER OR UNDER RANGE ALARM	Alarm Type: On Severity: 2 Out of Alarm Messages: User Defaults	Out of Alarm Label: Alarm Label:	Alarm Identification:	Alarm Acknowledge: PCU-2\PI-3125E_A_ACK (Auto Reset) In Alarm Messages: User Defaults Alarm Acknowledge Messages: User Defaults	Alarm Handshake:
PCU-2\PI-3173_A	Digital	PCU-2 INPUT ANALOG OVER OR UNDER RANGE ALARM	Alarm Type: On Severity: 2 Out of Alarm Messages: User Defaults	Out of Alarm Label: Alarm Label:	Alarm Identification:	Alarm Acknowledge: PCU-2\PI-3173_A_ACK (Auto Reset) In Alarm Messages: User Defaults Alarm Acknowledge Messages: User Defaults	Alarm Handshake:
PCU-2\PI-3182_A	Digital	PCU-2 INPUT ANALOG OVER OR UNDER RANGE ALARM	Alarm Type: On Severity: 2 Out of Alarm Messages: User Defaults	Out of Alarm Label: Alarm Label:	Alarm Identification:	Alarm Acknowledge: PCU-2\PI-3182_A_ACK (Auto Reset) In Alarm Messages: User Defaults Alarm Acknowledge Messages: User Defaults	Alarm Handshake:
PCU-2\PI-3183_A	Digital	PCU-2 INPUT ANALOG OVER OR UNDER RANGE ALARM	Alarm Type: On Severity: 2 Out of Alarm Messages: User Defaults	Out of Alarm Label: Alarm Label:	Alarm Identification:	Alarm Acknowledge: PCU-2\PI-3183_A_ACK (Auto Reset) In Alarm Messages: User Defaults Alarm Acknowledge Messages: User Defaults	Alarm Handshake:
PCU-2\SI-3125A_A	Digital	PCU-2 INPUT ANALOG OVER OR UNDER RANGE ALARM	Alarm Type: On Severity: 2 Out of Alarm Messages: User Defaults	Out of Alarm Label: Alarm Label:	Alarm Identification:	Alarm Acknowledge: PCU-2\SI-3125A_A_ACK (Auto Reset) In Alarm Messages: User Defaults Alarm Acknowledge Messages: User Defaults	Alarm Handshake:
PCU-2\SI-3125B_A	Digital	PCU-2 INPUT ANALOG OVER OR UNDER RANGE ALARM	Alarm Type: On Severity: 2 Out of Alarm Messages: User Defaults	Out of Alarm Label: Alarm Label:	Alarm Identification:	Alarm Acknowledge: PCU-2\SI-3125B_A_ACK (Auto Reset) In Alarm Messages: User Defaults Alarm Acknowledge Messages: User Defaults	Alarm Handshake:

Tag Name	Tag Type	Description					
PCU-2\TAH-3125A	Digital	PUMP P-3125A MOTOR WINDING TEMP. HIGH [OFF = ALARM] Y76	Alarm Type: Off Severity: 1 Out of Alarm Messages: User Defaults	Out of Alarm Label: Alarm Label:	Alarm Identification:	Alarm Acknowledge: PCU-2\TAH-3125A_ACK (Auto Reset) In Alarm Messages: User Defaults Alarm Acknowledge Messages: User Defaults	Alarm Handshake:
PCU-2\TAH-3125A1	Digital	PUMP P-3125A INBOARD BEARING HIGH TEMP. Y-76.1	Alarm Type: On Severity: 1 Out of Alarm Messages: User Defaults	Out of Alarm Label: Alarm Label:	Alarm Identification:	Alarm Acknowledge: PCU-2\TAH-3125A1_ACK (Auto Reset) In Alarm Messages: User Defaults Alarm Acknowledge Messages: User Defaults	Alarm Handshake:
PCU-2\TAH-3125A2	Digital	PUMP P-3125A OUTBOARD BEARING HIGH TEMP. Y-76.1	Alarm Type: On Severity: 1 Out of Alarm Messages: User Defaults	Out of Alarm Label: Alarm Label:	Alarm Identification:	Alarm Acknowledge: PCU-2\TAH-3125A2_ACK (Auto Reset) In Alarm Messages: User Defaults Alarm Acknowledge Messages: User Defaults	Alarm Handshake:
PCU-2\TAH-3125B	Digital	PUMP P-3125B MOTOR WINDING TEMP. HIGH [OFF = ALARM] Y76	Alarm Type: Off Severity: 1 Out of Alarm Messages: User Defaults	Out of Alarm Label: Alarm Label:	Alarm Identification:	Alarm Acknowledge: PCU-2\TAH-3125B_ACK (Auto Reset) In Alarm Messages: User Defaults Alarm Acknowledge Messages: User Defaults	Alarm Handshake:
PCU-2\TAH-3125B1	Digital	PUMP P-3125B INBOARD BEARING HIGH TEMP. Y-76.1	Alarm Type: On Severity: 1 Out of Alarm Messages: User Defaults	Out of Alarm Label: Alarm Label:	Alarm Identification:	Alarm Acknowledge: PCU-2\TAH-3125B1_ACK (Auto Reset) In Alarm Messages: User Defaults Alarm Acknowledge Messages: User Defaults	Alarm Handshake:
PCU-2\TAH-3125B2	Digital	PUMP P-3125B OUTBOARD BEARING HIGH TEMP. Y-76.1	Alarm Type: On Severity: 1 Out of Alarm Messages: User Defaults	Out of Alarm Label: Alarm Label:	Alarm Identification:	Alarm Acknowledge: PCU-2\TAH-3125B2_ACK (Auto Reset) In Alarm Messages: User Defaults Alarm Acknowledge Messages: User Defaults	Alarm Handshake:
PCU-2\TAH_CAB_PLC2	Digital	PLC-2 CABINET HIGH TEMPERATURE [OFF = ALARM]	Alarm Type: Off Severity: 2 Out of Alarm Messages: User Defaults	Out of Alarm Label: Alarm Label:	Alarm Identification:	Alarm Acknowledge: PCU-2\TAH_CAB_PLC2_ACK (Auto Reset) In Alarm Messages: User Defaults Alarm Acknowledge Messages: User Defaults	Alarm Handshake:
PCU-2\TI-3125A_A	Digital	PCU-2 INPUT THERMOCOUPLE OVER OR UNDER RANGE ALARM	Alarm Type: On Severity: 2 Out of Alarm Messages: User Defaults	Out of Alarm Label: Alarm Label:	Alarm Identification:	Alarm Acknowledge: PCU-2\TI-3125A_A_ACK (Auto Reset) In Alarm Messages: User Defaults Alarm Acknowledge Messages: User Defaults	Alarm Handshake:
PCU-2\TI-3125A1_A	Digital	PCU-2 INPUT R.T.D. TEMP. OVER OR UNDER RANGE ALARM	Alarm Type: On Severity: 2 Out of Alarm Messages: User Defaults	Out of Alarm Label: Alarm Label:	Alarm Identification:	Alarm Acknowledge: PCU-2\TI-3125A1_A_ACK (Auto Reset) In Alarm Messages: User Defaults Alarm Acknowledge Messages: User Defaults	Alarm Handshake:
PCU-2\TI-3125A2_A	Digital	PCU-2 INPUT R.T.D. TEMP. OVER OR UNDER RANGE ALARM	Alarm Type: On Severity: 2 Out of Alarm Messages: User Defaults	Out of Alarm Label: Alarm Label:	Alarm Identification:	Alarm Acknowledge: PCU-2\TI-3125A2_A_ACK (Auto Reset) In Alarm Messages: User Defaults Alarm Acknowledge Messages: User Defaults	Alarm Handshake:

Tag Name	Tag Type	Description					
PCU-2\TI-3125B_A	Digital	PCU-2 INPUT THERMOCOUPLE OVER OR UNDER RANGE ALARM	Alarm Type: On Severity: 2 Out of Alarm Messages: User Defaults	Out of Alarm Label: Alarm Label:	Alarm Identification:	Alarm Acknowledge: PCU-2\TI-3125B_A_ACK (Auto Reset) In Alarm Messages: User Defaults Alarm Acknowledge Messages: User Defaults	Alarm Handshake:
PCU-2\TI-3125B1_A	Digital	PCU-2 INPUT R.T.D. TEMP. OVER OR UNDER RANGE ALARM	Alarm Type: On Severity: 2 Out of Alarm Messages: User Defaults	Out of Alarm Label: Alarm Label:	Alarm Identification:	Alarm Acknowledge: PCU-2\TI-3125B1_A_ACK (Auto Reset) In Alarm Messages: User Defaults Alarm Acknowledge Messages: User Defaults	Alarm Handshake:
PCU-2\TI-3125B2_A	Digital	PCU-2 INPUT R.T.D. TEMP. OVER OR UNDER RANGE ALARM	Alarm Type: On Severity: 2 Out of Alarm Messages: User Defaults	Out of Alarm Label: Alarm Label:	Alarm Identification:	Alarm Acknowledge: PCU-2\TI-3125B2_A_ACK (Auto Reset) In Alarm Messages: User Defaults Alarm Acknowledge Messages: User Defaults	Alarm Handshake:
PCU-2\VAH-3125A1	Digital	PUMP P-3125A HIGH MOTOR VIBRATION Y-76.1	Alarm Type: On Severity: 1 Out of Alarm Messages: User Defaults	Out of Alarm Label: Alarm Label:	Alarm Identification:	Alarm Acknowledge: PCU-2\VAH-3125A1_ACK (Auto Reset) In Alarm Messages: User Defaults Alarm Acknowledge Messages: User Defaults	Alarm Handshake:
PCU-2\VAH-3125A2	Digital	PUMP P-3125A HIGH MOTOR VIBRATION Y-76.1	Alarm Type: On Severity: 1 Out of Alarm Messages: User Defaults	Out of Alarm Label: Alarm Label:	Alarm Identification:	Alarm Acknowledge: PCU-2\VAH-3125A2_ACK (Auto Reset) In Alarm Messages: User Defaults Alarm Acknowledge Messages: User Defaults	Alarm Handshake:
PCU-2\VAH-3125B1	Digital	PUMP P-3125B HIGH MOTOR VIBRATION Y-76.1	Alarm Type: On Severity: 1 Out of Alarm Messages: User Defaults	Out of Alarm Label: Alarm Label:	Alarm Identification:	Alarm Acknowledge: PCU-2\VAH-3125B1_ACK (Auto Reset) In Alarm Messages: User Defaults Alarm Acknowledge Messages: User Defaults	Alarm Handshake:
PCU-2\VAH-3125B2	Digital	PUMP P-3125B HIGH MOTOR VIBRATION Y-76.1	Alarm Type: On Severity: 1 Out of Alarm Messages: User Defaults	Out of Alarm Label: Alarm Label:	Alarm Identification:	Alarm Acknowledge: PCU-2\VAH-3125B2_ACK (Auto Reset) In Alarm Messages: User Defaults Alarm Acknowledge Messages: User Defaults	Alarm Handshake:
PCU-2\VI-3125A1_A	Digital	PCU-2 INPUT ANALOG OVER OR UNDER RANGE ALARM	Alarm Type: On Severity: 2 Out of Alarm Messages: User Defaults	Out of Alarm Label: Alarm Label:	Alarm Identification:	Alarm Acknowledge: PCU-2\VI-3125A1_A_ACK (Auto Reset) In Alarm Messages: User Defaults Alarm Acknowledge Messages: User Defaults	Alarm Handshake:
PCU-2\VI-3125A2_A	Digital	PCU-2 INPUT ANALOG OVER OR UNDER RANGE ALARM	Alarm Type: On Severity: 2 Out of Alarm Messages: User Defaults	Out of Alarm Label: Alarm Label:	Alarm Identification:	Alarm Acknowledge: PCU-2\VI-3125A2_A_ACK (Auto Reset) In Alarm Messages: User Defaults Alarm Acknowledge Messages: User Defaults	Alarm Handshake:
PCU-2\VI-3125B1_A	Digital	PCU-2 INPUT ANALOG OVER OR UNDER RANGE ALARM	Alarm Type: On Severity: 2 Out of Alarm Messages: User Defaults	Out of Alarm Label: Alarm Label:	Alarm Identification:	Alarm Acknowledge: PCU-2\VI-3125B1_A_ACK (Auto Reset) In Alarm Messages: User Defaults Alarm Acknowledge Messages: User Defaults	Alarm Handshake:

Tag Name	Tag Type	Description					
PCU-2\VI-3125B2_A	Digital	PCU-2 INPUT ANALOG OVER OR UNDER RANGE ALARM	Alarm Type: On Severity: 2 Out of Alarm Messages: User Defaults	Out of Alarm Label: Alarm Label:	Alarm Identification:	Alarm Acknowledge: PCU-2\VI-3125B2_A_ACK (Auto Reset) In Alarm Messages: User Defaults Alarm Acknowledge Messages: User Defaults	Alarm Handshake:
PCU-2\XA-3125A	Digital	BOOSTER PUMP P-3125A FAILURE Y-74.1	Alarm Type: On Severity: 1 Out of Alarm Messages: User Defaults	Out of Alarm Label: Alarm Label:	Alarm Identification:	Alarm Acknowledge: PCU-2\XA-3125A_ACK (Auto Reset) In Alarm Messages: User Defaults Alarm Acknowledge Messages: User Defaults	Alarm Handshake:
PCU-2\XA-3125B	Digital	BOOSTER PUMP P-3125B FAILURE Y-74.2	Alarm Type: On Severity: 1 Out of Alarm Messages: User Defaults	Out of Alarm Label: Alarm Label:	Alarm Identification:	Alarm Acknowledge: PCU-2\XA-3125B_ACK (Auto Reset) In Alarm Messages: User Defaults Alarm Acknowledge Messages: User Defaults	Alarm Handshake:
PCU-2\YA-3101A	Digital	ENCASEMENT RUPTURE DISK ACTIVATED [OFF = ALARM] OIT	Alarm Type: Off Severity: 1 Out of Alarm Messages: User Defaults	Out of Alarm Label: Alarm Label:	Alarm Identification:	Alarm Acknowledge: PCU-2\YA-3101A_ACK (Auto Reset) In Alarm Messages: User Defaults Alarm Acknowledge Messages: User Defaults	Alarm Handshake:
PCU-2\YA-3101B	Digital	ENCASEMENT RUPTURE DISK ACTIVATED [OFF = ALARM] OIT	Alarm Type: Off Severity: 1 Out of Alarm Messages: User Defaults	Out of Alarm Label: Alarm Label:	Alarm Identification:	Alarm Acknowledge: PCU-2\YA-3101B_ACK (Auto Reset) In Alarm Messages: User Defaults Alarm Acknowledge Messages: User Defaults	Alarm Handshake:
PCU-2\YA-3101C	Digital	ENCASEMENT RUPTURE DISK ACTIVATED [OFF = ALARM] OIT	Alarm Type: Off Severity: 1 Out of Alarm Messages: User Defaults	Out of Alarm Label: Alarm Label:	Alarm Identification:	Alarm Acknowledge: PCU-2\YA-3101C_ACK (Auto Reset) In Alarm Messages: User Defaults Alarm Acknowledge Messages: User Defaults	Alarm Handshake:
PCU-2\YA-3101D	Digital	ENCASEMENT RUPTURE DISK ACTIVATED [OFF = ALARM] OIT	Alarm Type: Off Severity: 1 Out of Alarm Messages: User Defaults	Out of Alarm Label: Alarm Label:	Alarm Identification:	Alarm Acknowledge: PCU-2\YA-3101D_ACK (Auto Reset) In Alarm Messages: User Defaults Alarm Acknowledge Messages: User Defaults	Alarm Handshake:
PCU-2\YA-3101E	Digital	ENCASEMENT RUPTURE DISK ACTIVATED [OFF = ALARM] OIT	Alarm Type: Off Severity: 1 Out of Alarm Messages: User Defaults	Out of Alarm Label: Alarm Label:	Alarm Identification:	Alarm Acknowledge: PCU-2\YA-3101E_ACK (Auto Reset) In Alarm Messages: User Defaults Alarm Acknowledge Messages: User Defaults	Alarm Handshake:
PCU-2\YA-3101F	Digital	ENCASEMENT RUPTURE DISK ACTIVATED [OFF = ALARM] OIT	Alarm Type: Off Severity: 1 Out of Alarm Messages: User Defaults	Out of Alarm Label: Alarm Label:	Alarm Identification:	Alarm Acknowledge: PCU-2\YA-3101F_ACK (Auto Reset) In Alarm Messages: User Defaults Alarm Acknowledge Messages: User Defaults	Alarm Handshake:
PCU-2\YA-3101G	Digital	ENCASEMENT RUPTURE DISK ACTIVATED [OFF = ALARM] OIT	Alarm Type: Off Severity: 1	Out of Alarm Label: Alarm Label:	Alarm Identification:	Alarm Acknowledge: PCU-2\YA-3101G_ACK (Auto Reset) In Alarm Messages: User Defaults	Alarm Handshake:

Tag Name	Tag Type	Description					
			Out of Alarm Messages: User Defaults			Alarm Acknowledge Messages: User Defaults	
PCU-2\YA-3101H	Digital	ENCASEMENT RUPTURE DISK ACTIVATED [OFF = ALARM] OIT	Alarm Type: Off Severity: 1 Out of Alarm Messages: User Defaults	Out of Alarm Label: Alarm Label:	Alarm Identification:	Alarm Acknowledge: PCU-2\YA-3101H_ACK (Auto Reset) In Alarm Messages: User Defaults Alarm Acknowledge Messages: User Defaults	Alarm Handshake:
PCU-2\ZA-3125C	Digital	VALVE SOV-3125C POSITION SWITCH FAILURE Y-84.1	Alarm Type: On Severity: 1 Out of Alarm Messages: User Defaults	Out of Alarm Label: Alarm Label:	Alarm Identification:	Alarm Acknowledge: PCU-2\ZA-3125C_ACK (Auto Reset) In Alarm Messages: User Defaults Alarm Acknowledge Messages: User Defaults	Alarm Handshake:
PCU-2\ZA-3125C1	Digital	VALVE SOV-3125C FAILED TO OPEN Y-84.1	Alarm Type: On Severity: 1 Out of Alarm Messages: User Defaults	Out of Alarm Label: Alarm Label:	Alarm Identification:	Alarm Acknowledge: PCU-2\ZA-3125C1_AC K (Auto Reset) In Alarm Messages: User Defaults Alarm Acknowledge Messages: User Defaults	Alarm Handshake:
PCU-2\ZA-3125C2	Digital	VALVE SOV-3125C FAILED TO CLOSE Y-84.1	Alarm Type: On Severity: 1 Out of Alarm Messages: User Defaults	Out of Alarm Label: Alarm Label:	Alarm Identification:	Alarm Acknowledge: PCU-2\ZA-3125C2_AC K (Auto Reset) In Alarm Messages: User Defaults Alarm Acknowledge Messages: User Defaults	Alarm Handshake:
PCU-2\ZA-3125D	Digital	VALVE SOV-3125D POSITION SWITCH FAILURE Y-86.1	Alarm Type: On Severity: 1 Out of Alarm Messages: User Defaults	Out of Alarm Label: Alarm Label:	Alarm Identification:	Alarm Acknowledge: PCU-2\ZA-3125D_ACK (Auto Reset) In Alarm Messages: User Defaults Alarm Acknowledge Messages: User Defaults	Alarm Handshake:
PCU-2\ZA-3125D1	Digital	VALVE SOV-3125D FAILED TO OPEN Y-86.1	Alarm Type: On Severity: 1 Out of Alarm Messages: User Defaults	Out of Alarm Label: Alarm Label:	Alarm Identification:	Alarm Acknowledge: PCU-2\ZA-3125D1_AC K (Auto Reset) In Alarm Messages: User Defaults Alarm Acknowledge Messages: User Defaults	Alarm Handshake:
PCU-2\ZA-3125D2	Digital	VALVE SOV-3125D FAILED TO CLOSE Y-86.1	Alarm Type: On Severity: 1 Out of Alarm Messages: User Defaults	Out of Alarm Label: Alarm Label:	Alarm Identification:	Alarm Acknowledge: PCU-2\ZA-3125D2_AC K (Auto Reset) In Alarm Messages: User Defaults Alarm Acknowledge Messages: User Defaults	Alarm Handshake:
PCU-2\ZA-3125E	Digital	VALVE SOV-3125E POSITION SWITCH FAILURE Y-83.1	Alarm Type: On Severity: 1 Out of Alarm Messages: User Defaults	Out of Alarm Label: Alarm Label:	Alarm Identification:	Alarm Acknowledge: PCU-2\ZA-3125E_ACK (Auto Reset) In Alarm Messages: User Defaults Alarm Acknowledge Messages: User Defaults	Alarm Handshake:
PCU-2\ZA-3125E1	Digital	VALVE SOV-3125E FAILED TO OPEN Y-83.1	Alarm Type: On Severity: 1 Out of Alarm Messages: User Defaults	Out of Alarm Label: Alarm Label:	Alarm Identification:	Alarm Acknowledge: PCU-2\ZA-3125E1_ACK (Auto Reset) In Alarm Messages: User Defaults Alarm Acknowledge Messages: User Defaults	Alarm Handshake:
PCU-2\ZA-3125E2	Digital	VALVE SOV-3125E FAILED TO CLOSE Y-83.1	Alarm Type: On Severity: 1 Out of Alarm Messages: User Defaults	Out of Alarm Label: Alarm Label:	Alarm Identification:	Alarm Acknowledge: PCU-2\ZA-3125E2_ACK (Auto Reset) In Alarm Messages: User Defaults Alarm Acknowledge Messages: User Defaults	Alarm Handshake:

Tag Name	Tag Type	Description					
PCU-2\ZA-3125G	Digital	VALVE SOV-3125G POSITION SWITCH FAILURE Y-85.1	Alarm Type: On Severity: 1 Out of Alarm Messages: User Defaults	Out of Alarm Label: Alarm Label:	Alarm Identification:	Alarm Acknowledge: PCU-2\ZA-3125G_ACK (Auto Reset) In Alarm Messages: User Defaults Alarm Acknowledge Messages: User Defaults	Alarm Handshake:
PCU-2\ZA-3125G1	Digital	VALVE SOV-3125G FAILED TO OPEN Y-85.1	Alarm Type: On Severity: 1 Out of Alarm Messages: User Defaults	Out of Alarm Label: Alarm Label:	Alarm Identification:	Alarm Acknowledge: PCU-2\ZA-3125G1_AC K (Auto Reset) In Alarm Messages: User Defaults Alarm Acknowledge Messages: User Defaults	Alarm Handshake:
PCU-2\ZA-3125G2	Digital	VALVE SOV-3125G FAILED TO CLOSE Y-85.1	Alarm Type: On Severity: 1 Out of Alarm Messages: User Defaults	Out of Alarm Label: Alarm Label:	Alarm Identification:	Alarm Acknowledge: PCU-2\ZA-3125G2_AC K (Auto Reset) In Alarm Messages: User Defaults Alarm Acknowledge Messages: User Defaults	Alarm Handshake:
PCU-2\ZA-3156A	Digital	VALVE MOV-3156A POSITION SWITCH FAILURE Y-89.1	Alarm Type: On Severity: 1 Out of Alarm Messages: User Defaults	Out of Alarm Label: Alarm Label:	Alarm Identification:	Alarm Acknowledge: PCU-2\ZA-3156A_ACK (Auto Reset) In Alarm Messages: User Defaults Alarm Acknowledge Messages: User Defaults	Alarm Handshake:
PCU-2\ZA-3156A1	Digital	VALVE MOV-3156A FAILED TO OPEN Y-89.1	Alarm Type: On Severity: 1 Out of Alarm Messages: User Defaults	Out of Alarm Label: Alarm Label:	Alarm Identification:	Alarm Acknowledge: PCU-2\ZA-3156A1_ACK (Auto Reset) In Alarm Messages: User Defaults Alarm Acknowledge Messages: User Defaults	Alarm Handshake:
PCU-2\ZA-3156A2	Digital	VALVE MOV-3156A FAILED TO CLOSE Y-89.1	Alarm Type: On Severity: 1 Out of Alarm Messages: User Defaults	Out of Alarm Label: Alarm Label:	Alarm Identification:	Alarm Acknowledge: PCU-2\ZA-3156A2_ACK (Auto Reset) In Alarm Messages: User Defaults Alarm Acknowledge Messages: User Defaults	Alarm Handshake:
PCU-2\ZA-3156B	Digital	VALVE MOV-3156B POSITION SWITCH FAILURE Y-89.2	Alarm Type: On Severity: 1 Out of Alarm Messages: User Defaults	Out of Alarm Label: Alarm Label:	Alarm Identification:	Alarm Acknowledge: PCU-2\ZA-3156B_ACK (Auto Reset) In Alarm Messages: User Defaults Alarm Acknowledge Messages: User Defaults	Alarm Handshake:
PCU-2\ZA-3156B1	Digital	VALVE MOV-3156B FAILED TO OPEN Y-89.2	Alarm Type: On Severity: 1 Out of Alarm Messages: User Defaults	Out of Alarm Label: Alarm Label:	Alarm Identification:	Alarm Acknowledge: PCU-2\ZA-3156B1_ACK (Auto Reset) In Alarm Messages: User Defaults Alarm Acknowledge Messages: User Defaults	Alarm Handshake:
PCU-2\ZA-3156B2	Digital	VALVE MOV-3156B FAILED TO CLOSE Y-89.2	Alarm Type: On Severity: 1 Out of Alarm Messages: User Defaults	Out of Alarm Label: Alarm Label:	Alarm Identification:	Alarm Acknowledge: PCU-2\ZA-3156B2_ACK (Auto Reset) In Alarm Messages: User Defaults Alarm Acknowledge Messages: User Defaults	Alarm Handshake:
PCU-2\ZA-3173A	Digital	VALVE SOV-3173A POSITION SWITCH FAILURE Y-87.1	Alarm Type: On Severity: 1 Out of Alarm Messages: User Defaults	Out of Alarm Label: Alarm Label:	Alarm Identification:	Alarm Acknowledge: PCU-2\ZA-3173A_ACK (Auto Reset) In Alarm Messages: User Defaults Alarm Acknowledge Messages: User Defaults	Alarm Handshake:
PCU-2\ZA-3173A1	Digital	VALVE SOV-3173A FAILED TO OPEN Y-87.1	Alarm Type: On Severity: 1	Out of Alarm Label: Alarm Label:	Alarm Identification:	Alarm Acknowledge: PCU-2\ZA-3173A1_ACK (Auto Reset) In Alarm Messages: User Defaults	Alarm Handshake:

Tag Name	Tag Type	Description					
			Out of Alarm Messages: User Defaults			Alarm Acknowledge Messages: User Defaults	
PCU-2\ZA-3173A2	Digital	VALVE SOV-3173A FAILED TO CLOSE Y-87.1	Alarm Type: On Severity: 1 Out of Alarm Messages: User Defaults	Out of Alarm Label: Alarm Label:	Alarm Identification:	Alarm Acknowledge: PCU-2\ZA-3173A2_ACK (Auto Reset) In Alarm Messages: User Defaults Alarm Acknowledge Messages: User Defaults	Alarm Handshake:
PCU-2\ZA-3173B	Digital	VALVE SOV-3173B POSITION SWITCH FAILURE Y-87.2	Alarm Type: On Severity: 1 Out of Alarm Messages: User Defaults	Out of Alarm Label: Alarm Label:	Alarm Identification:	Alarm Acknowledge: PCU-2\ZA-3173B_ACK (Auto Reset) In Alarm Messages: User Defaults Alarm Acknowledge Messages: User Defaults	Alarm Handshake:
PCU-2\ZA-3173B1	Digital	VALVE SOV-3173B FAILED TO OPEN Y-87.2	Alarm Type: On Severity: 1 Out of Alarm Messages: User Defaults	Out of Alarm Label: Alarm Label:	Alarm Identification:	Alarm Acknowledge: PCU-2\ZA-3173B1_ACK (Auto Reset) In Alarm Messages: User Defaults Alarm Acknowledge Messages: User Defaults	Alarm Handshake:
PCU-2\ZA-3173B2	Digital	VALVE SOV-3173B FAILED TO CLOSE Y-87.2	Alarm Type: On Severity: 1 Out of Alarm Messages: User Defaults	Out of Alarm Label: Alarm Label:	Alarm Identification:	Alarm Acknowledge: PCU-2\ZA-3173B2_ACK (Auto Reset) In Alarm Messages: User Defaults Alarm Acknowledge Messages: User Defaults	Alarm Handshake:
PCU-2\ZA-3182A	Digital	VALVE POSITION SWITCH FAILURE Y-71.1	Alarm Type: On Severity: 1 Out of Alarm Messages: User Defaults	Out of Alarm Label: Alarm Label:	Alarm Identification:	Alarm Acknowledge: PCU-2\ZA-3182A_ACK (Auto Reset) In Alarm Messages: User Defaults Alarm Acknowledge Messages: User Defaults	Alarm Handshake:
PCU-2\ZA-3182A1	Digital	VALVE FAILED TO OPEN Y-71.1	Alarm Type: On Severity: 1 Out of Alarm Messages: User Defaults	Out of Alarm Label: Alarm Label:	Alarm Identification:	Alarm Acknowledge: PCU-2\ZA-3182A1_ACK (Auto Reset) In Alarm Messages: User Defaults Alarm Acknowledge Messages: User Defaults	Alarm Handshake:
PCU-2\ZA-3182A2	Digital	VALVE FAILED TO CLOSE Y-71.1	Alarm Type: On Severity: 1 Out of Alarm Messages: User Defaults	Out of Alarm Label: Alarm Label:	Alarm Identification:	Alarm Acknowledge: PCU-2\ZA-3182A2_ACK (Auto Reset) In Alarm Messages: User Defaults Alarm Acknowledge Messages: User Defaults	Alarm Handshake:
PCU-2\ZA-3182B	Digital	VALVE POSITION SWITCH FAILURE Y-71.1	Alarm Type: On Severity: 1 Out of Alarm Messages: User Defaults	Out of Alarm Label: Alarm Label:	Alarm Identification:	Alarm Acknowledge: PCU-2\ZA-3182B_ACK (Auto Reset) In Alarm Messages: User Defaults Alarm Acknowledge Messages: User Defaults	Alarm Handshake:
PCU-2\ZA-3182B1	Digital	VALVE FAILED TO OPEN Y-71.1	Alarm Type: On Severity: 1 Out of Alarm Messages: User Defaults	Out of Alarm Label: Alarm Label:	Alarm Identification:	Alarm Acknowledge: PCU-2\ZA-3182B1_ACK (Auto Reset) In Alarm Messages: User Defaults Alarm Acknowledge Messages: User Defaults	Alarm Handshake:
PCU-2\ZA-3182B2	Digital	VALVE FAILED TO CLOSE Y-71.1	Alarm Type: On Severity: 1 Out of Alarm Messages: User Defaults	Out of Alarm Label: Alarm Label:	Alarm Identification:	Alarm Acknowledge: PCU-2\ZA-3182B2_ACK (Auto Reset) In Alarm Messages: User Defaults Alarm Acknowledge Messages: User Defaults	Alarm Handshake:

Tag Name	Tag Type	Description					
PCU-2\ZA-3183A	Digital	VALVE POSITION SWITCH FAILURE Y-71.1	Alarm Type: On Severity: 1 Out of Alarm Messages: User Defaults	Out of Alarm Label: Alarm Label:	Alarm Identification:	Alarm Acknowledge: PCU-2\ZA-3183A_ACK (Auto Reset) In Alarm Messages: User Defaults Alarm Acknowledge Messages: User Defaults	Alarm Handshake:
PCU-2\ZA-3183A1	Digital	VALVE FAILED TO OPEN Y-71.1	Alarm Type: On Severity: 1 Out of Alarm Messages: User Defaults	Out of Alarm Label: Alarm Label:	Alarm Identification:	Alarm Acknowledge: PCU-2\ZA-3183A1_ACK (Auto Reset) In Alarm Messages: User Defaults Alarm Acknowledge Messages: User Defaults	Alarm Handshake:
PCU-2\ZA-3183A2	Digital	VALVE FAILED TO CLOSE Y-71.1	Alarm Type: On Severity: 1 Out of Alarm Messages: User Defaults	Out of Alarm Label: Alarm Label:	Alarm Identification:	Alarm Acknowledge: PCU-2\ZA-3183A2_ACK (Auto Reset) In Alarm Messages: User Defaults Alarm Acknowledge Messages: User Defaults	Alarm Handshake:
PCU-2\ZA-3183B	Digital	VALVE POSITION SWITCH FAILURE Y-71.1	Alarm Type: On Severity: 1 Out of Alarm Messages: User Defaults	Out of Alarm Label: Alarm Label:	Alarm Identification:	Alarm Acknowledge: PCU-2\ZA-3183B_ACK (Auto Reset) In Alarm Messages: User Defaults Alarm Acknowledge Messages: User Defaults	Alarm Handshake:
PCU-2\ZA-3183B1	Digital	VALVE FAILED TO OPEN Y-71.1	Alarm Type: On Severity: 1 Out of Alarm Messages: User Defaults	Out of Alarm Label: Alarm Label:	Alarm Identification:	Alarm Acknowledge: PCU-2\ZA-3183B1_ACK (Auto Reset) In Alarm Messages: User Defaults Alarm Acknowledge Messages: User Defaults	Alarm Handshake:
PCU-2\ZA-3183B2	Digital	VALVE FAILED TO CLOSE Y-71.1	Alarm Type: On Severity: 1 Out of Alarm Messages: User Defaults	Out of Alarm Label: Alarm Label:	Alarm Identification:	Alarm Acknowledge: PCU-2\ZA-3183B2_ACK (Auto Reset) In Alarm Messages: User Defaults Alarm Acknowledge Messages: User Defaults	Alarm Handshake:
PCU-2\ZA-3184	Digital	VALVE POSITION SWITCH FAILURE Y-71.1	Alarm Type: On Severity: 1 Out of Alarm Messages: User Defaults	Out of Alarm Label: Alarm Label:	Alarm Identification:	Alarm Acknowledge: PCU-2\ZA-3184_ACK (Auto Reset) In Alarm Messages: User Defaults Alarm Acknowledge Messages: User Defaults	Alarm Handshake:
PCU-2\ZA-3184-1	Digital	VALVE FAILED TO OPEN Y-71.1	Alarm Type: On Severity: 1 Out of Alarm Messages: User Defaults	Out of Alarm Label: Alarm Label:	Alarm Identification:	Alarm Acknowledge: PCU-2\ZA-3184-1_ACK (Auto Reset) In Alarm Messages: User Defaults Alarm Acknowledge Messages: User Defaults	Alarm Handshake:
PCU-2\ZA-3184-2	Digital	VALVE FAILED TO CLOSE Y-71.1	Alarm Type: On Severity: 1 Out of Alarm Messages: User Defaults	Out of Alarm Label: Alarm Label:	Alarm Identification:	Alarm Acknowledge: PCU-2\ZA-3184-2_ACK (Auto Reset) In Alarm Messages: User Defaults Alarm Acknowledge Messages: User Defaults	Alarm Handshake:
PCU-3\BATT_BAD_PLC 3	Digital	PLC-3 BATTERY IS BAD OR MISSING	Alarm Type: On Severity: 2 Out of Alarm Messages: User Defaults	Out of Alarm Label: Alarm Label:	Alarm Identification:	Alarm Acknowledge: PCU-3\BATT_BAD_PLC 3_ACK (Auto Reset) In Alarm Messages: User Defaults Alarm Acknowledge Messages: User Defaults	Alarm Handshake:
PCU-3\COM-3_OCS	Digital	COMMUNICATION WITH OCS IGNORED	Alarm Type: On Severity: 1	Out of Alarm Label: Alarm Label:	Alarm Identification:	Alarm Acknowledge: PCU-3\COM-3_OCS_A CK (Auto Reset) In Alarm Messages: User Defaults	Alarm Handshake:

Tag Name	Tag Type	Description					
			Out of Alarm Messages: User Defaults			Alarm Acknowledge Messages: User Defaults	
PCU-3\COM-31	Digital	COMMUN. WITH PCU-1 IGNORED	Alarm Type: On Severity: 1 Out of Alarm Messages: User Defaults	Out of Alarm Label: Alarm Label:	Alarm Identification:	Alarm Acknowledge: PCU-3\COM-31_ACK (Auto Reset) In Alarm Messages: User Defaults Alarm Acknowledge Messages: User Defaults	Alarm Handshake:
PCU-3\COM-32	Digital	COMMUN. WITH PCU-2 IGNORED	Alarm Type: On Severity: 1 Out of Alarm Messages: User Defaults	Out of Alarm Label: Alarm Label:	Alarm Identification:	Alarm Acknowledge: PCU-3\COM-32_ACK (Auto Reset) In Alarm Messages: User Defaults Alarm Acknowledge Messages: User Defaults	Alarm Handshake:
PCU-3\COM-34	Digital	COMMUN. WITH PCU-4 IGNORED	Alarm Type: On Severity: 1 Out of Alarm Messages: User Defaults	Out of Alarm Label: Alarm Label:	Alarm Identification:	Alarm Acknowledge: PCU-3\COM-34_ACK (Auto Reset) In Alarm Messages: User Defaults Alarm Acknowledge Messages: User Defaults	Alarm Handshake:
PCU-3\COM-35	Digital	COMMUN. WITH PCU-5 IGNORED	Alarm Type: On Severity: 1 Out of Alarm Messages: User Defaults	Out of Alarm Label: Alarm Label:	Alarm Identification:	Alarm Acknowledge: PCU-3\COM-35_ACK (Auto Reset) In Alarm Messages: User Defaults Alarm Acknowledge Messages: User Defaults	Alarm Handshake:
PCU-3\COM-OCS_3	Digital	COMMUN. WITH PCU-3 IGNORED - DETECTED AT OCS	Alarm Type: On Severity: 1 Out of Alarm Messages: User Defaults	Out of Alarm Label: Alarm Label:	Alarm Identification:	Alarm Acknowledge: PCU-3\COM-OCS_3_ACK (Auto Reset) In Alarm Messages: User Defaults Alarm Acknowledge Messages: User Defaults	Alarm Handshake:
PCU-3\COM_OCS_3_MNT	Digital	Communiations failure with the PLC detected in this OIT	Alarm Type: On Severity: 1 Out of Alarm Messages: System Defaults	Out of Alarm Label: Alarm Label:	Alarm Identification:	Alarm Acknowledge: In Alarm Messages: System Defaults Alarm Acknowledge Messages: System Defaults	Alarm Handshake:
PCU-3\COM_OCS_3_OPR	Digital	Communiations failure with the PLC detected in this OIT	Alarm Type: On Severity: 1 Out of Alarm Messages: System Defaults	Out of Alarm Label: Alarm Label:	Alarm Identification:	Alarm Acknowledge: In Alarm Messages: System Defaults Alarm Acknowledge Messages: System Defaults	Alarm Handshake:
PCU-3\LDA-3151	Digital	LEAK DETECTED AT VENT STATION 6241-V SUMP Y-72.1	Alarm Type: On Severity: 1 Out of Alarm Messages: User Defaults	Out of Alarm Label: Alarm Label:	Alarm Identification:	Alarm Acknowledge: PCU-3\LDA-3151_ACK (Auto Reset) In Alarm Messages: User Defaults Alarm Acknowledge Messages: User Defaults	Alarm Handshake:
PCU-3\LDA-3161	Digital	6241-V ENCASEMENT LEAK DETECTION [OFF = ALARM] Y72	Alarm Type: Off Severity: 1 Out of Alarm Messages: User Defaults	Out of Alarm Label: Alarm Label:	Alarm Identification:	Alarm Acknowledge: PCU-3\LDA-3161_ACK (Auto Reset) In Alarm Messages: User Defaults Alarm Acknowledge Messages: User Defaults	Alarm Handshake:
PCU-3\PAH-3126A	Digital	SUPERNATE LINE HIGH PRESSURE FAILURE	Alarm Type: On Severity: 1 Out of Alarm Messages: User Defaults	Out of Alarm Label: Alarm Label:	Alarm Identification:	Alarm Acknowledge: PCU-3\PAH-3126A_ACK (Auto Reset) In Alarm Messages: User Defaults Alarm Acknowledge Messages: User Defaults	Alarm Handshake:

Tag Name	Tag Type	Description					
PCU-3\PAH-3167	Digital	VALVE SOV-3167A/B FAILURE Y73	Alarm Type: On Severity: 1 Out of Alarm Messages: User Defaults	Out of Alarm Label: Alarm Label:	Alarm Identification:	Alarm Acknowledge: PCU-3\PAH-3167_ACK (Auto Reset) In Alarm Messages: User Defaults Alarm Acknowledge Messages: User Defaults	Alarm Handshake:
PCU-3\PAH-3168	Digital	VALVE SOV-3168A/B FAILURE Y73	Alarm Type: On Severity: 1 Out of Alarm Messages: User Defaults	Out of Alarm Label: Alarm Label:	Alarm Identification:	Alarm Acknowledge: PCU-3\PAH-3168_ACK (Auto Reset) In Alarm Messages: User Defaults Alarm Acknowledge Messages: User Defaults	Alarm Handshake:
PCU-3\PAH-3185	Digital	VALVE SOV-3185A/B FAILURE Y73	Alarm Type: On Severity: 1 Out of Alarm Messages: User Defaults	Out of Alarm Label: Alarm Label:	Alarm Identification:	Alarm Acknowledge: PCU-3\PAH-3185_ACK (Auto Reset) In Alarm Messages: User Defaults Alarm Acknowledge Messages: User Defaults	Alarm Handshake:
PCU-3\PAHW-3126A	Digital	SUPERNATE LINE HIGH PRESSURE WARNING	Alarm Type: On Severity: 1 Out of Alarm Messages: User Defaults	Out of Alarm Label: Alarm Label:	Alarm Identification:	Alarm Acknowledge: PCU-3\PAHW-3126A_ACK (Auto Reset) In Alarm Messages: User Defaults Alarm Acknowledge Messages: User Defaults	Alarm Handshake:
PCU-3\PAL-3100B	Digital	LOW COMPRESSOR SA-CMP-3101B PRESSURE	Alarm Type: On Severity: 1 Out of Alarm Messages: User Defaults	Out of Alarm Label: Alarm Label:	Alarm Identification:	Alarm Acknowledge: PCU-3\PAL-3100B_ACK (Auto Reset) In Alarm Messages: User Defaults Alarm Acknowledge Messages: User Defaults	Alarm Handshake:
PCU-3\PI-3126A_A	Digital	PCU-3 INPUT ANALOG OVER OR UNDER RANGE ALARM	Alarm Type: On Severity: 2 Out of Alarm Messages: User Defaults	Out of Alarm Label: Alarm Label:	Alarm Identification:	Alarm Acknowledge: PCU-3\PI-3126A_A_ACK (Auto Reset) In Alarm Messages: User Defaults Alarm Acknowledge Messages: User Defaults	Alarm Handshake:
PCU-3\PI-3126B_A	Digital	PCU-3 INPUT ANALOG OVER OR UNDER RANGE ALARM	Alarm Type: On Severity: 2 Out of Alarm Messages: User Defaults	Out of Alarm Label: Alarm Label:	Alarm Identification:	Alarm Acknowledge: PCU-3\PI-3126B_A_ACK (Auto Reset) In Alarm Messages: User Defaults Alarm Acknowledge Messages: User Defaults	Alarm Handshake:
PCU-3\PI-3167_A	Digital	PCU-3 INPUT ANALOG OVER OR UNDER RANGE ALARM	Alarm Type: On Severity: 2 Out of Alarm Messages: User Defaults	Out of Alarm Label: Alarm Label:	Alarm Identification:	Alarm Acknowledge: PCU-3\PI-3167_A_ACK (Auto Reset) In Alarm Messages: User Defaults Alarm Acknowledge Messages: User Defaults	Alarm Handshake:
PCU-3\PI-3168_A	Digital	PCU-3 INPUT ANALOG OVER OR UNDER RANGE ALARM	Alarm Type: On Severity: 2 Out of Alarm Messages: User Defaults	Out of Alarm Label: Alarm Label:	Alarm Identification:	Alarm Acknowledge: PCU-3\PI-3168_A_ACK (Auto Reset) In Alarm Messages: User Defaults Alarm Acknowledge Messages: User Defaults	Alarm Handshake:
PCU-3\PI-3185_A	Digital	PCU-3 INPUT ANALOG OVER OR UNDER RANGE ALARM	Alarm Type: On Severity: 2 Out of Alarm Messages: User Defaults	Out of Alarm Label: Alarm Label:	Alarm Identification:	Alarm Acknowledge: PCU-3\PI-3185_A_ACK (Auto Reset) In Alarm Messages: User Defaults Alarm Acknowledge Messages: User Defaults	Alarm Handshake:
PCU-3\TAH_CAB_PLC3	Digital	PLC-3 CABINET HIGH TEMPERATURE [OFF = ALARM]	Alarm Type: Off Severity: 2	Out of Alarm Label: Alarm Label:	Alarm Identification:	Alarm Acknowledge: PCU-3\TAH_CAB_PLC3_ACK (Auto Reset) In Alarm Messages: User Defaults	Alarm Handshake:

Tag Name	Tag Type	Description					
			Out of Alarm Messages: User Defaults			Alarm Acknowledge Messages: User Defaults	
PCU-3\TI-3126A_A	Digital	PCU-3 INPUT THERMOCOUPLE OVER OR UNDER RANGE ALARM	Alarm Type: On	Out of Alarm Label:	Alarm Identification:	Alarm Acknowledge: PCU-3\TI-3126A_A_ACK (Auto Reset)	Alarm Handshake:
			Severity: 2	Alarm Label:		In Alarm Messages: User Defaults	
			Out of Alarm Messages: User Defaults			Alarm Acknowledge Messages: User Defaults	
PCU-3\TI-3126B_A	Digital	PCU-3 INPUT THERMOCOUPLE OVER OR UNDER RANGE ALARM	Alarm Type: On	Out of Alarm Label:	Alarm Identification:	Alarm Acknowledge: PCU-3\TI-3126B_A_ACK (Auto Reset)	Alarm Handshake:
			Severity: 2	Alarm Label:		In Alarm Messages: User Defaults	
			Out of Alarm Messages: User Defaults			Alarm Acknowledge Messages: User Defaults	
PCU-3\YA-3102A	Digital	ENCASEMENT RUPTURE DISK ACTIVATED [OFF = ALARM] OIT	Alarm Type: Off	Out of Alarm Label:	Alarm Identification:	Alarm Acknowledge: PCU-3\YA-3102A_ACK (Auto Reset)	Alarm Handshake:
			Severity: 1	Alarm Label:		In Alarm Messages: User Defaults	
			Out of Alarm Messages: User Defaults			Alarm Acknowledge Messages: User Defaults	
PCU-3\YA-3102B	Digital	ENCASEMENT RUPTURE DISK ACTIVATED [OFF = ALARM] OIT	Alarm Type: Off	Out of Alarm Label:	Alarm Identification:	Alarm Acknowledge: PCU-3\YA-3102B_ACK (Auto Reset)	Alarm Handshake:
			Severity: 1	Alarm Label:		In Alarm Messages: User Defaults	
			Out of Alarm Messages: User Defaults			Alarm Acknowledge Messages: User Defaults	
PCU-3\YA-3102C	Digital	ENCASEMENT RUPTURE DISK ACTIVATED [OFF = ALARM] OIT	Alarm Type: Off	Out of Alarm Label:	Alarm Identification:	Alarm Acknowledge: PCU-3\YA-3102C_ACK (Auto Reset)	Alarm Handshake:
			Severity: 1	Alarm Label:		In Alarm Messages: User Defaults	
			Out of Alarm Messages: User Defaults			Alarm Acknowledge Messages: User Defaults	
PCU-3\YA-3102D	Digital	ENCASEMENT RUPTURE DISK ACTIVATED [OFF = ALARM] OIT	Alarm Type: Off	Out of Alarm Label:	Alarm Identification:	Alarm Acknowledge: PCU-3\YA-3102D_ACK (Auto Reset)	Alarm Handshake:
			Severity: 1	Alarm Label:		In Alarm Messages: User Defaults	
			Out of Alarm Messages: User Defaults			Alarm Acknowledge Messages: User Defaults	
PCU-3\ZA-3165A	Digital	VALVE POSITION SWITCH FAILURE Y71	Alarm Type: On	Out of Alarm Label:	Alarm Identification:	Alarm Acknowledge: PCU-3\ZA-3165A_ACK (Auto Reset)	Alarm Handshake:
			Severity: 1	Alarm Label:		In Alarm Messages: User Defaults	
			Out of Alarm Messages: User Defaults			Alarm Acknowledge Messages: User Defaults	
PCU-3\ZA-3165A1	Digital	VALVE FAILED TO OPEN Y71	Alarm Type: On	Out of Alarm Label:	Alarm Identification:	Alarm Acknowledge: PCU-3\ZA-3165A1_ACK (Auto Reset)	Alarm Handshake:
			Severity: 1	Alarm Label:		In Alarm Messages: User Defaults	
			Out of Alarm Messages: User Defaults			Alarm Acknowledge Messages: User Defaults	
PCU-3\ZA-3165A2	Digital	VALVE FAILED TO CLOSE Y71	Alarm Type: On	Out of Alarm Label:	Alarm Identification:	Alarm Acknowledge: PCU-3\ZA-3165A2_ACK (Auto Reset)	Alarm Handshake:
			Severity: 1	Alarm Label:		In Alarm Messages: User Defaults	
			Out of Alarm Messages: User Defaults			Alarm Acknowledge Messages: User Defaults	
PCU-3\ZA-3165B	Digital	VALVE POSITION SWITCH FAILURE Y71	Alarm Type: On	Out of Alarm Label:	Alarm Identification:	Alarm Acknowledge: PCU-3\ZA-3165B_ACK (Auto Reset)	Alarm Handshake:
			Severity: 1	Alarm Label:		In Alarm Messages: User Defaults	

Tag Name	Tag Type	Description					
			Out of Alarm Messages: User Defaults			Alarm Acknowledge Messages: User Defaults	
PCU-3\ZA-3165B1	Digital	VALVE FAILED TO OPEN Y71	Alarm Type: On Severity: 1 Out of Alarm Messages: User Defaults	Out of Alarm Label: Alarm Label:	Alarm Identification:	Alarm Acknowledge: PCU-3\ZA-3165B1_ACK (Auto Reset) In Alarm Messages: User Defaults Alarm Acknowledge Messages: User Defaults	Alarm Handshake:
PCU-3\ZA-3165B2	Digital	VALVE FAILED TO CLOSE Y71	Alarm Type: On Severity: 1 Out of Alarm Messages: User Defaults	Out of Alarm Label: Alarm Label:	Alarm Identification:	Alarm Acknowledge: PCU-3\ZA-3165B2_ACK (Auto Reset) In Alarm Messages: User Defaults Alarm Acknowledge Messages: User Defaults	Alarm Handshake:
PCU-3\ZA-3166A	Digital	VALVE POSITION SWITCH FAILURE Y71	Alarm Type: On Severity: 1 Out of Alarm Messages: User Defaults	Out of Alarm Label: Alarm Label:	Alarm Identification:	Alarm Acknowledge: PCU-3\ZA-3166A_ACK (Auto Reset) In Alarm Messages: User Defaults Alarm Acknowledge Messages: User Defaults	Alarm Handshake:
PCU-3\ZA-3166A1	Digital	VALVE FAILED TO OPEN Y71	Alarm Type: On Severity: 1 Out of Alarm Messages: User Defaults	Out of Alarm Label: Alarm Label:	Alarm Identification:	Alarm Acknowledge: PCU-3\ZA-3166A1_ACK (Auto Reset) In Alarm Messages: User Defaults Alarm Acknowledge Messages: User Defaults	Alarm Handshake:
PCU-3\ZA-3166A2	Digital	VALVE FAILED TO CLOSE Y71	Alarm Type: On Severity: 1 Out of Alarm Messages: User Defaults	Out of Alarm Label: Alarm Label:	Alarm Identification:	Alarm Acknowledge: PCU-3\ZA-3166A2_ACK (Auto Reset) In Alarm Messages: User Defaults Alarm Acknowledge Messages: User Defaults	Alarm Handshake:
PCU-3\ZA-3166B	Digital	VALVE POSITION SWITCH FAILURE Y71	Alarm Type: On Severity: 1 Out of Alarm Messages: User Defaults	Out of Alarm Label: Alarm Label:	Alarm Identification:	Alarm Acknowledge: PCU-3\ZA-3166B_ACK (Auto Reset) In Alarm Messages: User Defaults Alarm Acknowledge Messages: User Defaults	Alarm Handshake:
PCU-3\ZA-3166B1	Digital	VALVE FAILED TO OPEN Y71	Alarm Type: On Severity: 1 Out of Alarm Messages: User Defaults	Out of Alarm Label: Alarm Label:	Alarm Identification:	Alarm Acknowledge: PCU-3\ZA-3166B1_ACK (Auto Reset) In Alarm Messages: User Defaults Alarm Acknowledge Messages: User Defaults	Alarm Handshake:
PCU-3\ZA-3166B2	Digital	VALVE FAILED TO CLOSE Y71	Alarm Type: On Severity: 1 Out of Alarm Messages: User Defaults	Out of Alarm Label: Alarm Label:	Alarm Identification:	Alarm Acknowledge: PCU-3\ZA-3166B2_ACK (Auto Reset) In Alarm Messages: User Defaults Alarm Acknowledge Messages: User Defaults	Alarm Handshake:
PCU-3\ZA-3167A	Digital	VALVE POSITION SWITCH FAILURE Y88-1	Alarm Type: On Severity: 1 Out of Alarm Messages: User Defaults	Out of Alarm Label: Alarm Label:	Alarm Identification:	Alarm Acknowledge: PCU-3\ZA-3167A_ACK (Auto Reset) In Alarm Messages: User Defaults Alarm Acknowledge Messages: User Defaults	Alarm Handshake:
PCU-3\ZA-3167A1	Digital	VALVE FAILED TO OPEN Y88-1	Alarm Type: On Severity: 1 Out of Alarm Messages: User Defaults	Out of Alarm Label: Alarm Label:	Alarm Identification:	Alarm Acknowledge: PCU-3\ZA-3167A1_ACK (Auto Reset) In Alarm Messages: User Defaults Alarm Acknowledge Messages: User Defaults	Alarm Handshake:

Tag Name	Tag Type	Description					
PCU-3\ZA-3167A2	Digital	VALVE FAILED TO CLOSE Y88-1	Alarm Type: On Severity: 1 Out of Alarm Messages: User Defaults	Out of Alarm Label: Alarm Label:	Alarm Identification:	Alarm Acknowledge: PCU-3\ZA-3167A2_ACK (Auto Reset) In Alarm Messages: User Defaults Alarm Acknowledge Messages: User Defaults	Alarm Handshake:
PCU-3\ZA-3167B	Digital	VALVE POSITION SWITCH FAILURE Y88-2	Alarm Type: On Severity: 1 Out of Alarm Messages: User Defaults	Out of Alarm Label: Alarm Label:	Alarm Identification:	Alarm Acknowledge: PCU-3\ZA-3167B_ACK (Auto Reset) In Alarm Messages: User Defaults Alarm Acknowledge Messages: User Defaults	Alarm Handshake:
PCU-3\ZA-3167B1	Digital	VALVE FAILED TO OPEN Y88-2	Alarm Type: On Severity: 1 Out of Alarm Messages: User Defaults	Out of Alarm Label: Alarm Label:	Alarm Identification:	Alarm Acknowledge: PCU-3\ZA-3167B1_ACK (Auto Reset) In Alarm Messages: User Defaults Alarm Acknowledge Messages: User Defaults	Alarm Handshake:
PCU-3\ZA-3167B2	Digital	VALVE FAILED TO CLOSE Y88-2	Alarm Type: On Severity: 1 Out of Alarm Messages: User Defaults	Out of Alarm Label: Alarm Label:	Alarm Identification:	Alarm Acknowledge: PCU-3\ZA-3167B2_ACK (Auto Reset) In Alarm Messages: User Defaults Alarm Acknowledge Messages: User Defaults	Alarm Handshake:
PCU-3\ZA-3168A	Digital	VALVE POSITION SWITCH FAILURE Y81-3	Alarm Type: On Severity: 1 Out of Alarm Messages: User Defaults	Out of Alarm Label: Alarm Label:	Alarm Identification:	Alarm Acknowledge: PCU-3\ZA-3168A_ACK (Auto Reset) In Alarm Messages: User Defaults Alarm Acknowledge Messages: User Defaults	Alarm Handshake:
PCU-3\ZA-3168A1	Digital	VALVE FAILED TO OPEN Y81-3	Alarm Type: On Severity: 1 Out of Alarm Messages: User Defaults	Out of Alarm Label: Alarm Label:	Alarm Identification:	Alarm Acknowledge: PCU-3\ZA-3168A1_ACK (Auto Reset) In Alarm Messages: User Defaults Alarm Acknowledge Messages: User Defaults	Alarm Handshake:
PCU-3\ZA-3168A2	Digital	VALVE FAILED TO CLOSE Y81-3	Alarm Type: On Severity: 1 Out of Alarm Messages: User Defaults	Out of Alarm Label: Alarm Label:	Alarm Identification:	Alarm Acknowledge: PCU-3\ZA-3168A2_ACK (Auto Reset) In Alarm Messages: User Defaults Alarm Acknowledge Messages: User Defaults	Alarm Handshake:
PCU-3\ZA-3168B	Digital	VALVE POSITION SWITCH FAILURE Y81-4	Alarm Type: On Severity: 1 Out of Alarm Messages: User Defaults	Out of Alarm Label: Alarm Label:	Alarm Identification:	Alarm Acknowledge: PCU-3\ZA-3168B_ACK (Auto Reset) In Alarm Messages: User Defaults Alarm Acknowledge Messages: User Defaults	Alarm Handshake:
PCU-3\ZA-3168B1	Digital	VALVE FAILED TO OPEN Y81-4	Alarm Type: On Severity: 1 Out of Alarm Messages: User Defaults	Out of Alarm Label: Alarm Label:	Alarm Identification:	Alarm Acknowledge: PCU-3\ZA-3168B1_ACK (Auto Reset) In Alarm Messages: User Defaults Alarm Acknowledge Messages: User Defaults	Alarm Handshake:
PCU-3\ZA-3168B2	Digital	VALVE FAILED TO CLOSE Y81-4	Alarm Type: On Severity: 1 Out of Alarm Messages: User Defaults	Out of Alarm Label: Alarm Label:	Alarm Identification:	Alarm Acknowledge: PCU-3\ZA-3168B2_ACK (Auto Reset) In Alarm Messages: User Defaults Alarm Acknowledge Messages: User Defaults	Alarm Handshake:
PCU-3\ZA-3185A	Digital	VALVE POSITION SWITCH FAILURE Y81-1	Alarm Type: On Severity: 1	Out of Alarm Label: Alarm Label:	Alarm Identification:	Alarm Acknowledge: PCU-3\ZA-3185A_ACK (Auto Reset) In Alarm Messages: User Defaults	Alarm Handshake:

Tag Name	Tag Type	Description					
			Out of Alarm Messages: User Defaults			Alarm Acknowledge Messages: User Defaults	
PCU-3\ZA-3185A1	Digital	VALVE FAILED TO OPEN Y81-1	Alarm Type: On Severity: 1 Out of Alarm Messages: User Defaults	Out of Alarm Label: Alarm Label:	Alarm Identification:	Alarm Acknowledge: PCU-3\ZA-3185A1_ACK (Auto Reset) In Alarm Messages: User Defaults Alarm Acknowledge Messages: User Defaults	Alarm Handshake:
PCU-3\ZA-3185A2	Digital	VALVE FAILED TO CLOSE Y81-1	Alarm Type: On Severity: 1 Out of Alarm Messages: User Defaults	Out of Alarm Label: Alarm Label:	Alarm Identification:	Alarm Acknowledge: PCU-3\ZA-3185A2_ACK (Auto Reset) In Alarm Messages: User Defaults Alarm Acknowledge Messages: User Defaults	Alarm Handshake:
PCU-3\ZA-3185B	Digital	VALVE POSITION SWITCH FAILURE Y81-2	Alarm Type: On Severity: 1 Out of Alarm Messages: User Defaults	Out of Alarm Label: Alarm Label:	Alarm Identification:	Alarm Acknowledge: PCU-3\ZA-3185B_ACK (Auto Reset) In Alarm Messages: User Defaults Alarm Acknowledge Messages: User Defaults	Alarm Handshake:
PCU-3\ZA-3185B1	Digital	VALVE FAILED TO OPEN Y81-2	Alarm Type: On Severity: 1 Out of Alarm Messages: User Defaults	Out of Alarm Label: Alarm Label:	Alarm Identification:	Alarm Acknowledge: PCU-3\ZA-3185B1_ACK (Auto Reset) In Alarm Messages: User Defaults Alarm Acknowledge Messages: User Defaults	Alarm Handshake:
PCU-3\ZA-3185B2	Digital	VALVE FAILED TO CLOSE Y81-2	Alarm Type: On Severity: 1 Out of Alarm Messages: User Defaults	Out of Alarm Label: Alarm Label:	Alarm Identification:	Alarm Acknowledge: PCU-3\ZA-3185B2_ACK (Auto Reset) In Alarm Messages: User Defaults Alarm Acknowledge Messages: User Defaults	Alarm Handshake:
PCU-4\BATT_BAD_PLC 4	Digital	PLC-4 BATTERY IS BAD OR MISSING	Alarm Type: On Severity: 2 Out of Alarm Messages: User Defaults	Out of Alarm Label: Alarm Label:	Alarm Identification:	Alarm Acknowledge: PCU-4\BATT_BAD_PLC 4_ACK (Auto Reset) In Alarm Messages: User Defaults Alarm Acknowledge Messages: User Defaults	Alarm Handshake:
PCU-4\COM-4_OCS	Digital	COMMUN. WITH OCS IGNORED	Alarm Type: On Severity: 1 Out of Alarm Messages: User Defaults	Out of Alarm Label: Alarm Label:	Alarm Identification:	Alarm Acknowledge: PCU-4\COM-4_OCS_A CK (Auto Reset) In Alarm Messages: User Defaults Alarm Acknowledge Messages: User Defaults	Alarm Handshake:
PCU-4\COM-41	Digital	COMMUN. WITH PCU-1 IGNORED	Alarm Type: On Severity: 1 Out of Alarm Messages: User Defaults	Out of Alarm Label: Alarm Label:	Alarm Identification:	Alarm Acknowledge: PCU-4\COM-41_ACK (Auto Reset) In Alarm Messages: User Defaults Alarm Acknowledge Messages: User Defaults	Alarm Handshake:
PCU-4\COM-42	Digital	COMMUN. WITH PCU-2 IGNORED	Alarm Type: On Severity: 1 Out of Alarm Messages: User Defaults	Out of Alarm Label: Alarm Label:	Alarm Identification:	Alarm Acknowledge: PCU-4\COM-42_ACK (Auto Reset) In Alarm Messages: User Defaults Alarm Acknowledge Messages: User Defaults	Alarm Handshake:
PCU-4\COM-43	Digital	COMMUN. WITH PCU-3 IGNORED	Alarm Type: On Severity: 1 Out of Alarm Messages: User Defaults	Out of Alarm Label: Alarm Label:	Alarm Identification:	Alarm Acknowledge: PCU-4\COM-43_ACK (Auto Reset) In Alarm Messages: User Defaults Alarm Acknowledge Messages: User Defaults	Alarm Handshake:

Tag Name	Tag Type	Description					
PCU-4\COM-45	Digital	COMMUN. WITH PCU-5 IGNORED	Alarm Type: On Severity: 1 Out of Alarm Messages: User Defaults	Out of Alarm Label: Alarm Label:	Alarm Identification:	Alarm Acknowledge: PCU-4\COM-45_ACK (Auto Reset) In Alarm Messages: User Defaults Alarm Acknowledge Messages: User Defaults	Alarm Handshake:
PCU-4\COM-OCS_4	Digital	COMMUN. WITH PCU-4 IGNORED - DETECTED AT OCS	Alarm Type: On Severity: 1 Out of Alarm Messages: User Defaults	Out of Alarm Label: Alarm Label:	Alarm Identification:	Alarm Acknowledge: PCU-4\COM-OCS_4_ACK (Auto Reset) In Alarm Messages: User Defaults Alarm Acknowledge Messages: User Defaults	Alarm Handshake:
PCU-4\COM_OCS_4_MNT	Digital	Communiations failure with the PLC detected in this OIT	Alarm Type: On Severity: 1 Out of Alarm Messages: System Defaults	Out of Alarm Label: Alarm Label:	Alarm Identification:	Alarm Acknowledge: In Alarm Messages: System Defaults Alarm Acknowledge Messages: System Defaults	Alarm Handshake:
PCU-4\COM_OCS_4_OPR	Digital	Communiations failure with the PLC detected in this OIT	Alarm Type: On Severity: 1 Out of Alarm Messages: System Defaults	Out of Alarm Label: Alarm Label:	Alarm Identification:	Alarm Acknowledge: In Alarm Messages: System Defaults Alarm Acknowledge Messages: System Defaults	Alarm Handshake:
PCU-4\DI-850_A	Digital	PCU-4 INPUT ANALOG OVER OR UNDER RANGE ALARM	Alarm Type: On Severity: 2 Out of Alarm Messages: User Defaults	Out of Alarm Label: Alarm Label:	Alarm Identification:	Alarm Acknowledge: PCU-4\DI-850_A_ACK (Auto Reset) In Alarm Messages: User Defaults Alarm Acknowledge Messages: User Defaults	Alarm Handshake:
PCU-4\DI-853_A	Digital	PCU-4 INPUT ANALOG OVER OR UNDER RANGE ALARM	Alarm Type: On Severity: 2 Out of Alarm Messages: User Defaults	Out of Alarm Label: Alarm Label:	Alarm Identification:	Alarm Acknowledge: PCU-4\DI-853_A_ACK (Auto Reset) In Alarm Messages: User Defaults Alarm Acknowledge Messages: User Defaults	Alarm Handshake:
PCU-4\FAL-851	Digital	STACK 296-A-25 LOW FLOW	Alarm Type: On Severity: 1 Out of Alarm Messages: User Defaults	Out of Alarm Label: Alarm Label:	Alarm Identification:	Alarm Acknowledge: PCU-4\FAL-851_ACK (Auto Reset) In Alarm Messages: User Defaults Alarm Acknowledge Messages: User Defaults	Alarm Handshake:
PCU-4\LDA-3163	Digital	244-A TO AN ENC. LEAK DETECTION [OFF = ALARM]	Alarm Type: Off Severity: 1 Out of Alarm Messages: System Defaults	Out of Alarm Label: Alarm Label:	Alarm Identification:	Alarm Acknowledge: PCU-4\LDA-3163_ACK (Auto Reset) In Alarm Messages: System Defaults Alarm Acknowledge Messages: System Defaults	Alarm Handshake:
PCU-4\LDA-841	Digital	244-A PUMP PIT LEAK DETECTION (OFF=ALARM) Y72	Alarm Type: Off Severity: 1 Out of Alarm Messages: User Defaults	Out of Alarm Label: Alarm Label:	Alarm Identification:	Alarm Acknowledge: PCU-4\LDA-841_ACK (Auto Reset) In Alarm Messages: User Defaults Alarm Acknowledge Messages: User Defaults	Alarm Handshake:
PCU-4\LI-850_A	Digital	PCU-4 INPUT ANALOG OVER OR UNDER RANGE ALARM	Alarm Type: On Severity: 2 Out of Alarm Messages: User Defaults	Out of Alarm Label: Alarm Label:	Alarm Identification:	Alarm Acknowledge: PCU-4\LI-850_A_ACK (Auto Reset) In Alarm Messages: User Defaults Alarm Acknowledge Messages: User Defaults	Alarm Handshake:
PCU-4\LI-853_A	Digital	PCU-4 INPUT ANALOG OVER OR UNDER RANGE ALARM	Alarm Type: On Severity: 2	Out of Alarm Label: Alarm Label:	Alarm Identification:	Alarm Acknowledge: PCU-4\LI-853_A_ACK (Auto Reset) In Alarm Messages: User Defaults	Alarm Handshake:

Tag Name	Tag Type	Description					
			Out of Alarm Messages: User Defaults			Alarm Acknowledge Messages: User Defaults	
PCU-4\PAH-842	Digital	SUPERNATE LINE HIGH PRESSURE	Alarm Type: On Severity: 1 Out of Alarm Messages: User Defaults	Out of Alarm Label: Alarm Label:	Alarm Identification:	Alarm Acknowledge: PCU-4\PAH-842_ACK (Auto Reset) In Alarm Messages: User Defaults Alarm Acknowledge Messages: User Defaults	Alarm Handshake:
PCU-4\RAH-851	Digital	STACK 296-A-25 HIGH RADIATION	Alarm Type: On Severity: 1 Out of Alarm Messages: User Defaults	Out of Alarm Label: Alarm Label:	Alarm Identification:	Alarm Acknowledge: PCU-4\RAH-851_ACK (Auto Reset) In Alarm Messages: User Defaults Alarm Acknowledge Messages: User Defaults	Alarm Handshake:
PCU-4\TAH_CAB_PLC4	Digital	PLC-4 CABINET HIGH TEMPERATURE [OFF = ALARM]	Alarm Type: Off Severity: 2 Out of Alarm Messages: User Defaults	Out of Alarm Label: Alarm Label:	Alarm Identification:	Alarm Acknowledge: PCU-4\TAH_CAB_PLC4 _ACK (Auto Reset) In Alarm Messages: User Defaults Alarm Acknowledge Messages: User Defaults	Alarm Handshake:
PCU-4\XA-058E	Digital	200-E MASTER SHUTDOWN CIRCUIT ACTIVATED Y-77.1	Alarm Type: On Severity: 1 Out of Alarm Messages: User Defaults	Out of Alarm Label: Alarm Label:	Alarm Identification:	Alarm Acknowledge: PCU-4\XA-058E_ACK (Auto Reset) In Alarm Messages: User Defaults Alarm Acknowledge Messages: User Defaults	Alarm Handshake:
PCU-5\BATT_BAD_PLC 5	Digital	PLC-5 BATTERY IS BAD OR MISSING	Alarm Type: On Severity: 2 Out of Alarm Messages: User Defaults	Out of Alarm Label: Alarm Label:	Alarm Identification:	Alarm Acknowledge: PCU-5\BATT_BAD_PLC 5_ACK (Auto Reset) In Alarm Messages: User Defaults Alarm Acknowledge Messages: User Defaults	Alarm Handshake:
PCU-5\COM-5_OCS	Digital	COMMUN. WITH OCS IGNORED	Alarm Type: On Severity: 1 Out of Alarm Messages: User Defaults	Out of Alarm Label: Alarm Label:	Alarm Identification:	Alarm Acknowledge: PCU-5\COM-5_OCS_A CK (Auto Reset) In Alarm Messages: User Defaults Alarm Acknowledge Messages: User Defaults	Alarm Handshake:
PCU-5\COM-51	Digital	COMMUN. WITH PCU-1 IGNORED	Alarm Type: On Severity: 1 Out of Alarm Messages: User Defaults	Out of Alarm Label: Alarm Label:	Alarm Identification:	Alarm Acknowledge: PCU-5\COM-51_ACK (Auto Reset) In Alarm Messages: User Defaults Alarm Acknowledge Messages: User Defaults	Alarm Handshake:
PCU-5\COM-52	Digital	COMMUN. WITH PCU-2 IGNORED	Alarm Type: On Severity: 1 Out of Alarm Messages: User Defaults	Out of Alarm Label: Alarm Label:	Alarm Identification:	Alarm Acknowledge: PCU-5\COM-52_ACK (Auto Reset) In Alarm Messages: User Defaults Alarm Acknowledge Messages: User Defaults	Alarm Handshake:
PCU-5\COM-53	Digital	COMMUN. WITH PCU-3 IGNORED	Alarm Type: On Severity: 1 Out of Alarm Messages: User Defaults	Out of Alarm Label: Alarm Label:	Alarm Identification:	Alarm Acknowledge: PCU-5\COM-53_ACK (Auto Reset) In Alarm Messages: User Defaults Alarm Acknowledge Messages: User Defaults	Alarm Handshake:
PCU-5\COM-54	Digital	COMMUN. WITH PCU-4 IGNORED	Alarm Type: On Severity: 1 Out of Alarm Messages: User Defaults	Out of Alarm Label: Alarm Label:	Alarm Identification:	Alarm Acknowledge: PCU-5\COM-54_ACK (Auto Reset) In Alarm Messages: User Defaults Alarm Acknowledge Messages: User Defaults	Alarm Handshake:

Tag Name	Tag Type	Description					
PCU-5\COM-OCS_5	Digital	COMMUN. WITH PCU-5 IGNORED - DETECTED AT OCS	Alarm Type: On Severity: 1 Out of Alarm Messages: User Defaults	Out of Alarm Label: Alarm Label:	Alarm Identification:	Alarm Acknowledge: PCU-5\COM-OCS_5_ACK (Auto Reset) In Alarm Messages: User Defaults Alarm Acknowledge Messages: User Defaults	Alarm Handshake:
PCU-5\COM_OCS_5_MNT	Digital	Communiations failure with the PLC detected in this OIT	Alarm Type: On Severity: 1 Out of Alarm Messages: System Defaults	Out of Alarm Label: Alarm Label:	Alarm Identification:	Alarm Acknowledge: In Alarm Messages: System Defaults Alarm Acknowledge Messages: System Defaults	Alarm Handshake:
PCU-5\COM_OCS_5_OPR	Digital	Communiations failure with the PLC detected in this OIT	Alarm Type: On Severity: 1 Out of Alarm Messages: System Defaults	Out of Alarm Label: Alarm Label:	Alarm Identification:	Alarm Acknowledge: In Alarm Messages: System Defaults Alarm Acknowledge Messages: System Defaults	Alarm Handshake:
PCU-5\LDA-3162	Digital	244-A ENCASEMENT LEAK DETECTION [OFF = ALARM] Y72	Alarm Type: Off Severity: 1 Out of Alarm Messages: User Defaults	Out of Alarm Label: Alarm Label:	Alarm Identification:	Alarm Acknowledge: PCU-5\LDA-3162_ACK (Auto Reset) In Alarm Messages: User Defaults Alarm Acknowledge Messages: User Defaults	Alarm Handshake:
PCU-5\TAH_CAB_PLC5	Digital	PLC-5 CABINET HIGH TEMPERATURE [OFF = ALARM]	Alarm Type: Off Severity: 2 Out of Alarm Messages: User Defaults	Out of Alarm Label: Alarm Label:	Alarm Identification:	Alarm Acknowledge: PCU-5\TAH_CAB_PLC5_ACK (Auto Reset) In Alarm Messages: User Defaults Alarm Acknowledge Messages: User Defaults	Alarm Handshake:
TEST_4	Digital	TEST HOLDING BIT	Alarm Type: On Severity: 1 Out of Alarm Messages: System Defaults	Out of Alarm Label: Alarm Label:	Alarm Identification:	Alarm Acknowledge: In Alarm Messages: System Defaults Alarm Acknowledge Messages: System Defaults	Alarm Handshake:
TEST_5	Digital	TEST HOLDING BIT	Alarm Type: On Severity: 1 Out of Alarm Messages: System Defaults	Out of Alarm Label: Alarm Label:	Alarm Identification:	Alarm Acknowledge: In Alarm Messages: System Defaults Alarm Acknowledge Messages: System Defaults	Alarm Handshake:
TEST_6	Digital	TEST HOLDING BIT	Alarm Type: On Severity: 1 Out of Alarm Messages: System Defaults	Out of Alarm Label: Alarm Label:	Alarm Identification:	Alarm Acknowledge: In Alarm Messages: System Defaults Alarm Acknowledge Messages: System Defaults	Alarm Handshake:
TEST_7	Digital	TEST HOLDING BIT	Alarm Type: On Severity: 1 Out of Alarm Messages: System Defaults	Out of Alarm Label: Alarm Label:	Alarm Identification:	Alarm Acknowledge: In Alarm Messages: System Defaults Alarm Acknowledge Messages: System Defaults	Alarm Handshake:

1.4.4 System\Tag Database\Unused Tag List

Number of Unused Tags = 384

Tag Name	Tag Type	Tag Description	Security	Data Source	Node Name	Address	Scan Class
PCU-1\200W-SD2	Digital	INPUT SIGNAL TO 200-W MASTER SHUTDOWN Y-72.1	*	Device Tag	PCU-1	N14:29/4	A
PCU-1\FIC-302C-2A	Analog	FLOW CONTROL CHEM ADD PUMP P-3100B	*	Device Tag	PCU-1	N14:46	A
PCU-1\FIC-3101-E	Analog	PUMP SY-101-WT-P-350 OUTLET FLOW DRIVE SPEED LOOP ERROR	*	Device Tag	PCU-1	N14:60	A
PCU-1\HS-058W	Digital	OVERRIDE OF 200-W MASTER SHUTDOWN Y-77.1	*	Device Tag	PCU-1	N14:120/9	A
PCU-1\HS-302C-2R	Digital	ACCUMULATED INLET FLOW TO TANK TK-302-C RESET	*	Device Tag	PCU-1	N14:120/12	A
PCU-1\HS-3100A1	Digital	START FLUSH PUMP P-3100A Y-90.1	*	Device Tag	PCU-1	N14:120/10	A
PCU-1\HS-3100A2	Digital	STOP FLUSH PUMP P-3100A Y-90.1	*	Device Tag	PCU-1	N14:120/11	A
PCU-1\HS-3101A	Digital	START TRANSFER PUMP SY-101-WT-P-350	*	Device Tag	PCU-1	N14:120/4	A
PCU-1\HS-3101B	Digital	STOP TRANSFER PUMP SY-101-WT-P-350	*	Device Tag	PCU-1	N14:120/5	A
PCU-1\HS-3102A	Digital	START TRANSFER PUMP P-102-SY-02A Y75	*	Device Tag	PCU-1	N14:120/6	A
PCU-1\HS-3102B	Digital	STOP TRANSFER PUMP P-102-SY-02A Y75	*	Device Tag	PCU-1	N14:120/7	A

Tag Name	Tag Type	Tag Description	Security	Data Source	Node Name	Address	Scan Class
PCU-1\P-101-WT-RESET	Digital	RESET PUMP SY-101-WT-P-350 INTERLOCKS	*	Device Tag	PCU-1	N14:29/6	A
PCU-1\P-102-SY-02A2	Digital	STOP PUMP P-102-SY-02A Y75	*	Device Tag	PCU-1	N14:29/4	A
PCU-1\P-102-SY-02A4	Digital	TRANSFER PUMP P-102-SY-02A ENABLED - POWER ON	*	Device Tag	PCU-1	N14:26/5	A
PCU-1\P-102-SY-02EN	Digital	START PERMISSIVE P-102-SY-02A [ON=ENAB]	*	Device Tag	PCU-1	N14:29/3	A
PCU-1\P-3100A1	Digital	START PUMP P-3100A Y-90.1	*	Device Tag	PCU-1	N14:29/1	A
PCU-1\P-3100A2	Digital	STOP PUMP P-3100A Y-90.1	*	Device Tag	PCU-1	N14:29/0	A
PCU-1\PCU1-SP-AI-53	Analog	SPARE ANALOG INPUT	*	Device Tag	PCU-1	N14:52	A
PCU-1\PCU1-SP-AI-53_A	Digital	PCU-1 INPUT ANALOG OVER OR UNDER RANGE ALARM	*	Device Tag	PCU-1	N14:13/2	A
PCU-1\PCU1-SP-AI-54	Analog	SPARE ANALOG INPUT	*	Device Tag	PCU-1	N14:53	A
PCU-1\PCU1-SP-AI-54_A	Digital	PCU-1 INPUT ANALOG OVER OR UNDER RANGE ALARM	*	Device Tag	PCU-1	N14:13/3	A
PCU-1\PCU1-SP-AI-56	Analog	SPARE ANALOG INPUT	*	Device Tag	PCU-1	N14:55	A
PCU-1\PCU1-SP-AI-56_A	Digital	PCU-1 INPUT ANALOG OVER OR UNDER RANGE ALARM	*	Device Tag	PCU-1	N14:13/5	A
PCU-1\PCU1-SP-AI-57	Analog	SPARE ANALOG INPUT	*	Device Tag	PCU-1	N14:56	A
PCU-1\PCU1-SP-AI-57_A	Digital	PCU-1 INPUT ANALOG OVER OR UNDER RANGE ALARM	*	Device Tag	PCU-1	N14:13/6	A
PCU-1\PCU1-SP-AI-58	Analog	SPARE ANALOG INPUT	*	Device Tag	PCU-1	N14:57	A
PCU-1\PCU1-SP-AI-58_A	Digital	PCU-1 INPUT ANALOG OVER OR UNDER RANGE ALARM	*	Device Tag	PCU-1	N14:13/7	A
PCU-1\PCU1-SP-AI-6	Analog	SPARE ANALOG INPUT	*	Device Tag	PCU-1	N14:35	A
PCU-1\PCU1-SP-AI-6_A	Digital	PCU-1 INPUT ANALOG OVER OR UNDER RANGE ALARM	*	Device Tag	PCU-1	N14:11/5	A
PCU-1\PCU1-SP-AO-3	Analog	SPARE ANALOG OUTPUT	*	Device Tag	PCU-1	N14:48	A
PCU-1\PCU1-SP-AO-4	Analog	SPARE ANALOG OUTPUT	*	Device Tag	PCU-1	N14:49	A
PCU-1\PCU1-SP-I3-03	Digital	SPARE DIGITAL INPUT	*	Device Tag	PCU-1	N14:26/3	A
PCU-1\PCU1-SP-I3-13	Digital	SPARE DIGITAL INPUT	*	Device Tag	PCU-1	N14:26/11	A
PCU-1\PCU1-SP-I3-14	Digital	SPARE DIGITAL INPUT	*	Device Tag	PCU-1	N14:26/12	A
PCU-1\PCU1-SP-I3-15	Digital	SPARE DIGITAL INPUT	*	Device Tag	PCU-1	N14:26/13	A
PCU-1\PCU1-SP-I3-16	Digital	SPARE DIGITAL INPUT	*	Device Tag	PCU-1	N14:26/14	A
PCU-1\PCU1-SP-I3-17	Digital	SPARE DIGITAL INPUT	*	Device Tag	PCU-1	N14:26/15	A
PCU-1\PCU1-SP-O7-10	Digital	SPARE DIGITAL OUTPUT	*	Device Tag	PCU-1	N14:29/8	A
PCU-1\PCU1-SP-O7-11	Digital	SPARE DIGITAL OUTPUT	*	Device Tag	PCU-1	N14:29/9	A
PCU-1\PCU1-SP-O7-12	Digital	SPARE DIGITAL OUTPUT	*	Device Tag	PCU-1	N14:29/10	A
PCU-1\PCU1-SP-O7-13	Digital	SPARE DIGITAL OUTPUT	*	Device Tag	PCU-1	N14:29/11	A
PCU-1\PCU1-SP-O7-14	Digital	SPARE DIGITAL OUTPUT	*	Device Tag	PCU-1	N14:29/12	A
PCU-1\PCU1-SP-O7-15	Digital	SPARE DIGITAL OUTPUT	*	Device Tag	PCU-1	N14:29/13	A
PCU-1\PCU1-SP-O7-16	Digital	SPARE DIGITAL OUTPUT	*	Device Tag	PCU-1	N14:29/14	A
PCU-1\PCU1-SP-O7-17	Digital	SPARE DIGITAL OUTPUT	*	Device Tag	PCU-1	N14:29/15	A
PCU-1\PCU1-SP-TI-6	Analog	SPARE THERMOCOUPLE INPUT	*	Device Tag	PCU-1	N14:43	A
PCU-1\PCU1-SP-TI-6_A	Digital	PCU-1 INPUT THERMOCOUPLE OVER OR UNDER RANGE ALARM	*	Device Tag	PCU-1	N14:12/13	A
PCU-1\PCU1-SP-TI-7	Analog	SPARE THERMOCOUPLE INPUT	*	Device Tag	PCU-1	N14:44	A
PCU-1\PCU1-SP-TI-7_A	Digital	PCU-1 INPUT THERMOCOUPLE OVER OR UNDER RANGE ALARM	*	Device Tag	PCU-1	N14:12/14	A
PCU-1\PCU1-SP-TI-8	Analog	SPARE THERMOCOUPLE INPUT	*	Device Tag	PCU-1	N14:45	A
PCU-1\PCU1-SP-TI-8_A	Digital	PCU-1 INPUT THERMOCOUPLE OVER OR UNDER RANGE ALARM	*	Device Tag	PCU-1	N14:12/15	A
PCU-1\PID-3101-KD	Analog	TRANSFER PUMP SY-101-WT-P-350 PID DERIVITIVE GAIN REF FROM OIT	*	Device Tag	PCU-1	N14:144	A
PCU-1\PID-3101-KI	Analog	TRANSFER PUMP SY-101-WT-P-350 PID INTEGRAL GAIN REF FROM OIT	*	Device Tag	PCU-1	N14:143	A
PCU-1\PID-3101-KP	Analog	TRANSFER PUMP SY-101-WT-P-350 PID PROPORTIONAL GAIN REF FROM OIT	*	Device Tag	PCU-1	N14:142	A
PCU-1\PID-3101-OUT	Analog	SY-101-WT-P-350 TRANSFER PUMP SPEED CONTROL	*	Device Tag	PCU-1	N14:47	A
PCU-2\HS-3125A1	Digital	START BOOSTER PUMP P-3125A Y-74.1	*	Device Tag	PCU-2	N14:126/0	A
PCU-2\HS-3125A2	Digital	STOP BOOSTER PUMP P-3125A Y-74.1	*	Device Tag	PCU-2	N14:126/1	A
PCU-2\HS-3125AZ	Digital	RESET VALVES FOR PUMP P-3125A Y-79.1	*	Device Tag	PCU-2	N14:126/5	A
PCU-2\HS-3125B1	Digital	START BOOSTER PUMP P-3125B Y-74.2	*	Device Tag	PCU-2	N14:126/2	A
PCU-2\HS-3125B2	Digital	STOP BOOSTER PUMP P-3125B Y-74.2	*	Device Tag	PCU-2	N14:126/3	A
PCU-2\HS-3125BY	Digital	INITIATE DRAINING OF PUMP P-3125B Y-80.1	*	Device Tag	PCU-2	N14:127/12	A
PCU-2\HS-3125BZ	Digital	RESET VALVES FOR PUMP P-3125B Y-80.1	*	Device Tag	PCU-2	N14:127/13	A
PCU-2\LDAH-3150	Digital	6241-A SUMP LEAK DETECTION Y72	*	Device Tag	PCU-2	N14:22/8	A
PCU-2\LDXA-3150	Digital	SUMP LEAK DETECTOR Y72	*	Device Tag	PCU-2	N14:22/10	A
PCU-2\MOV-3125AA1	Digital	OPEN VALVE MOV-3125AA Y79-1	*	Device Tag	PCU-2	N14:26/0	A
PCU-2\MOV-3125AA2	Digital	CLOSE VALVE MOV-3125AA Y79-1	*	Device Tag	PCU-2	N14:26/1	A
PCU-2\MOV-3125AB1	Digital	OPEN VALVE MOV-3125AB Y79-1	*	Device Tag	PCU-2	N14:26/2	A
PCU-2\MOV-3125AB2	Digital	CLOSE VALVE MOV-3125AB Y79-1	*	Device Tag	PCU-2	N14:26/3	A
PCU-2\MOV-3125AC1	Digital	OPEN VALVE MOV-3125AC Y79-1	*	Device Tag	PCU-2	N14:26/4	A
PCU-2\MOV-3125AC2	Digital	CLOSE VALVE MOV-3125AC Y79-1	*	Device Tag	PCU-2	N14:26/5	A
PCU-2\MOV-3125AD1	Digital	OPEN VALVE MOV-3125AD Y79-1	*	Device Tag	PCU-2	N14:26/6	A
PCU-2\MOV-3125AD2	Digital	CLOSE VALVE MOV-3125AD Y79-1	*	Device Tag	PCU-2	N14:26/7	A
PCU-2\MOV-3125AE1	Digital	OPEN VALVE MOV-3125AE Y79-1	*	Device Tag	PCU-2	N14:26/8	A
PCU-2\MOV-3125AE2	Digital	CLOSE VALVE MOV-3125AE Y79-1	*	Device Tag	PCU-2	N14:26/9	A
PCU-2\MOV-3125AF1	Digital	OPEN VALVE MOV-3125AF Y79-1	*	Device Tag	PCU-2	N14:26/10	A
PCU-2\MOV-3125AF2	Digital	CLOSE VALVE MOV-3125AF Y79-1	*	Device Tag	PCU-2	N14:26/11	A
PCU-2\MOV-3125AG1	Digital	OPEN VALVE MOV-3125AG Y79-1	*	Device Tag	PCU-2	N14:26/12	A
PCU-2\MOV-3125AG2	Digital	CLOSE VALVE MOV-3125AG Y79-1	*	Device Tag	PCU-2	N14:26/13	A
PCU-2\MOV-3125AH1	Digital	OPEN VALVE MOV-3125AH Y79-1	*	Device Tag	PCU-2	N14:26/14	A
PCU-2\MOV-3125AH2	Digital	CLOSE VALVE MOV-3125AH Y79-1	*	Device Tag	PCU-2	N14:26/15	A
PCU-2\MOV-3125AJ1	Digital	OPEN VALVE MOV-3125AJ Y79-2	*	Device Tag	PCU-2	N14:27/0	A
PCU-2\MOV-3125AJ2	Digital	CLOSE VALVE MOV-3125AJ Y79-2	*	Device Tag	PCU-2	N14:27/1	A
PCU-2\MOV-3125AK1	Digital	OPEN VALVE MOV-3125AK Y79-2	*	Device Tag	PCU-2	N14:27/2	A
PCU-2\MOV-3125AK2	Digital	CLOSE VALVE MOV-3125AK Y79-2	*	Device Tag	PCU-2	N14:27/3	A
PCU-2\MOV-3125BA1	Digital	OPEN VALVE MOV-3125BA Y80-1	*	Device Tag	PCU-2	N14:25/0	A
PCU-2\MOV-3125BA2	Digital	CLOSE VALVE MOV-3125BA Y80-1	*	Device Tag	PCU-2	N14:25/1	A
PCU-2\MOV-3125BB1	Digital	OPEN VALVE MOV-3125BB Y80-1	*	Device Tag	PCU-2	N14:25/2	A
PCU-2\MOV-3125BB2	Digital	CLOSE VALVE MOV-3125BB Y80-1	*	Device Tag	PCU-2	N14:25/3	A
PCU-2\MOV-3125BC1	Digital	OPEN VALVE MOV-3125BC Y80-1	*	Device Tag	PCU-2	N14:25/4	A
PCU-2\MOV-3125BC2	Digital	CLOSE VALVE MOV-3125BC Y80-1	*	Device Tag	PCU-2	N14:25/5	A
PCU-2\MOV-3125BD1	Digital	OPEN VALVE MOV-3125BD Y80-1	*	Device Tag	PCU-2	N14:25/6	A
PCU-2\MOV-3125BD2	Digital	CLOSE VALVE MOV-3125BD Y80-1	*	Device Tag	PCU-2	N14:25/7	A
PCU-2\MOV-3125BE1	Digital	OPEN VALVE MOV-3125BE Y80-1	*	Device Tag	PCU-2	N14:25/8	A
PCU-2\MOV-3125BE2	Digital	CLOSE VALVE MOV-3125BE Y80-1	*	Device Tag	PCU-2	N14:25/9	A
PCU-2\MOV-3125BF1	Digital	OPEN VALVE MOV-3125BF Y80-1	*	Device Tag	PCU-2	N14:25/10	A
PCU-2\MOV-3125BF2	Digital	CLOSE VALVE MOV-3125BF Y80-1	*	Device Tag	PCU-2	N14:25/11	A
PCU-2\MOV-3125BG1	Digital	OPEN VALVE MOV-3125BG Y80-1	*	Device Tag	PCU-2	N14:25/12	A

Tag Name	Tag Type	Tag Description	Security	Data Source	Node Name	Address	Scan Class
PCU-2\MOV-3125BG2	Digital	CLOSE VALVE MOV-3125BG Y80-1	*	Device Tag	PCU-2	N14:25/13	A
PCU-2\MOV-3125BH1	Digital	OPEN VALVE MOV-3125BH Y80-1	*	Device Tag	PCU-2	N14:25/14	A
PCU-2\MOV-3125BH2	Digital	CLOSE VALVE MOV-3125BH Y80-1	*	Device Tag	PCU-2	N14:25/15	A
PCU-2\MOV-3125BJ1	Digital	OPEN VALVE MOV-3125BJ Y80-2	*	Device Tag	PCU-2	N14:27/4	A
PCU-2\MOV-3125BJ2	Digital	CLOSE VALVE MOV-3125BJ Y80-2	*	Device Tag	PCU-2	N14:27/5	A
PCU-2\MOV-3125BK1	Digital	OPEN VALVE MOV-3125BK Y80-2	*	Device Tag	PCU-2	N14:27/6	A
PCU-2\MOV-3125BK2	Digital	CLOSE VALVE MOV-3125BK Y80-2	*	Device Tag	PCU-2	N14:27/7	A
PCU-2\MOV-3156A1	Digital	OPEN VALVE MOV-3156A Y89-1	*	Device Tag	PCU-2	N14:28/10	A
PCU-2\MOV-3156A2	Digital	CLOSE VALVE MOV-3156A Y89-1	*	Device Tag	PCU-2	N14:28/11	A
PCU-2\MOV-3156B1	Digital	OPEN VALVE MOV-3156B Y89-2	*	Device Tag	PCU-2	N14:28/8	A
PCU-2\MOV-3156B2	Digital	CLOSE VALVE MOV-3156B Y89-2	*	Device Tag	PCU-2	N14:28/9	A
PCU-2\P-3115	Digital	SHUTDOWN SUMP PUMP P-3115 Y-82.1	*	Device Tag	PCU-2	N14:27/12	A
PCU-2\PCU2-SP-AI-8	Analog	SPARE ANALOG INPUT	*	Device Tag	PCU-2	N14:61	A
PCU-2\PCU2-SP-AI-8_A	Digital	PCU-2 INPUT ANALOG OVER OR UNDER RANGE ALARM	*	Device Tag	PCU-2	N14:14/15	A
PCU-2\PCU2-SP-AO-3	Analog	SPARE ANALOG OUTPUT	*	Device Tag	PCU-2	N14:64	A
PCU-2\PCU2-SP-AO-4	Analog	SPARE ANALOG OUTPUT	*	Device Tag	PCU-2	N14:65	A
PCU-2\PCU2-SP-I21-04	Digital	SPARE DIGITAL INPUT	*	Device Tag	PCU-2	N14:17/4	A
PCU-2\PCU2-SP-I21-05	Digital	SPARE DIGITAL INPUT	*	Device Tag	PCU-2	N14:17/5	A
PCU-2\PCU2-SP-I21-06	Digital	SPARE DIGITAL INPUT	*	Device Tag	PCU-2	N14:17/6	A
PCU-2\PCU2-SP-I21-07	Digital	SPARE DIGITAL INPUT	*	Device Tag	PCU-2	N14:17/7	A
PCU-2\PCU2-SP-I21-10	Digital	SPARE DIGITAL INPUT	*	Device Tag	PCU-2	N14:17/8	A
PCU-2\PCU2-SP-I21-11	Digital	SPARE DIGITAL INPUT	*	Device Tag	PCU-2	N14:17/9	A
PCU-2\PCU2-SP-I21-12	Digital	SPARE DIGITAL INPUT	*	Device Tag	PCU-2	N14:17/10	A
PCU-2\PCU2-SP-I21-13	Digital	SPARE DIGITAL INPUT	*	Device Tag	PCU-2	N14:17/11	A
PCU-2\PCU2-SP-I21-14	Digital	SPARE DIGITAL INPUT	*	Device Tag	PCU-2	N14:17/12	A
PCU-2\PCU2-SP-I21-15	Digital	SPARE DIGITAL INPUT	*	Device Tag	PCU-2	N14:17/13	A
PCU-2\PCU2-SP-I21-16	Digital	SPARE DIGITAL INPUT	*	Device Tag	PCU-2	N14:17/14	A
PCU-2\PCU2-SP-I21-17	Digital	SPARE DIGITAL INPUT	*	Device Tag	PCU-2	N14:17/15	A
PCU-2\PCU2-SP-I23-14	Digital	SPARE DIGITAL INPUT	*	Device Tag	PCU-2	N14:19/12	A
PCU-2\PCU2-SP-I23-15	Digital	SPARE DIGITAL INPUT	*	Device Tag	PCU-2	N14:19/13	A
PCU-2\PCU2-SP-I23-16	Digital	SPARE DIGITAL INPUT	*	Device Tag	PCU-2	N14:19/14	A
PCU-2\PCU2-SP-I23-17	Digital	SPARE DIGITAL INPUT	*	Device Tag	PCU-2	N14:19/15	A
PCU-2\PCU2-SP-O35-15	Digital	SPARE DIGITAL OUTPUT	*	Device Tag	PCU-2	N14:27/13	A
PCU-2\PCU2-SP-O35-16	Digital	SPARE DIGITAL OUTPUT	*	Device Tag	PCU-2	N14:27/14	A
PCU-2\PCU2-SP-O35-17	Digital	SPARE DIGITAL OUTPUT	*	Device Tag	PCU-2	N14:27/15	A
PCU-2\PCU2-SP-O37-14	Digital	SPARE DIGITAL OUTPUT	*	Device Tag	PCU-2	N14:29/12	A
PCU-2\PCU2-SP-O37-15	Digital	SPARE DIGITAL OUTPUT	*	Device Tag	PCU-2	N14:29/13	A
PCU-2\PCU2-SP-O37-16	Digital	SPARE DIGITAL OUTPUT	*	Device Tag	PCU-2	N14:29/14	A
PCU-2\PCU2-SP-O37-17	Digital	SPARE DIGITAL OUTPUT	*	Device Tag	PCU-2	N14:29/15	A
PCU-2\PCU2-SP-RI-5	Analog	SPARE R.T.D. TEMP. INPUT	*	Device Tag	PCU-2	N14:34	A
PCU-2\PCU2-SP-RI-5_A	Digital	PCU-2 INPUT R.T.D. TEMP. OVER OR UNDER RANGE ALARM	*	Device Tag	PCU-2	N14:11/4	A
PCU-2\PCU2-SP-RI-6	Analog	SPARE R.T.D. TEMP. INPUT	*	Device Tag	PCU-2	N14:35	A
PCU-2\PCU2-SP-RI-6_A	Digital	PCU-2 INPUT R.T.D. TEMP. OVER OR UNDER RANGE ALARM	*	Device Tag	PCU-2	N14:11/5	A
PCU-2\PCU2-SP-RI-7	Analog	SPARE R.T.D. TEMP. INPUT	*	Device Tag	PCU-2	N14:36	A
PCU-2\PCU2-SP-RI-7_A	Digital	PCU-2 INPUT R.T.D. TEMP. OVER OR UNDER RANGE ALARM	*	Device Tag	PCU-2	N14:11/6	A
PCU-2\PCU2-SP-RI-8	Analog	SPARE R.T.D. TEMP. INPUT	*	Device Tag	PCU-2	N14:37	A
PCU-2\PCU2-SP-RI-8_A	Digital	PCU-2 INPUT R.T.D. TEMP. OVER OR UNDER RANGE ALARM	*	Device Tag	PCU-2	N14:11/7	A
PCU-2\PCU2-SP-TI-2	Analog	SPARE THERMOCOUPLE INPUT	*	Device Tag	PCU-2	N14:39	A
PCU-2\PCU2-SP-TI-2_A	Digital	PCU-2 INPUT THERMOCOUPLE OVER OR UNDER RANGE ALARM	*	Device Tag	PCU-2	N14:12/9	A
PCU-2\PCU2-SP-TI-4	Analog	SPARE THERMOCOUPLE INPUT	*	Device Tag	PCU-2	N14:41	A
PCU-2\PCU2-SP-TI-4_A	Digital	PCU-2 INPUT THERMOCOUPLE OVER OR UNDER RANGE ALARM	*	Device Tag	PCU-2	N14:12/11	A
PCU-2\PCU2-SP-TI-5	Analog	SPARE THERMOCOUPLE INPUT	*	Device Tag	PCU-2	N14:42	A
PCU-2\PCU2-SP-TI-5_A	Digital	PCU-2 INPUT THERMOCOUPLE OVER OR UNDER RANGE ALARM	*	Device Tag	PCU-2	N14:12/12	A
PCU-2\PCU2-SP-TI-6	Analog	SPARE THERMOCOUPLE INPUT	*	Device Tag	PCU-2	N14:43	A
PCU-2\PCU2-SP-TI-6_A	Digital	PCU-2 INPUT THERMOCOUPLE OVER OR UNDER RANGE ALARM	*	Device Tag	PCU-2	N14:12/13	A
PCU-2\PCU2-SP-TI-7	Analog	SPARE THERMOCOUPLE INPUT	*	Device Tag	PCU-2	N14:44	A
PCU-2\PCU2-SP-TI-7_A	Digital	PCU-2 INPUT THERMOCOUPLE OVER OR UNDER RANGE ALARM	*	Device Tag	PCU-2	N14:12/14	A
PCU-2\PCU2-SP-TI-8	Analog	SPARE THERMOCOUPLE INPUT	*	Device Tag	PCU-2	N14:45	A
PCU-2\PCU2-SP-TI-8_A	Digital	PCU-2 INPUT THERMOCOUPLE OVER OR UNDER RANGE ALARM	*	Device Tag	PCU-2	N14:12/15	A
PCU-2\SOV-3125C1	Digital	OPEN VALVE SOV-3125C Y-84	*	Device Tag	PCU-2	N14:28/0	A
PCU-2\SOV-3125C2	Digital	CLOSE VALVE SOV-3125C Y-84	*	Device Tag	PCU-2	N14:28/1	A
PCU-2\SOV-3125D1	Digital	OPEN VALVE SOV-3125D Y-86	*	Device Tag	PCU-2	N14:28/2	A
PCU-2\SOV-3125D2	Digital	CLOSE VALVE SOV-3125D Y-86	*	Device Tag	PCU-2	N14:28/3	A
PCU-2\SOV-3125E1	Digital	OPEN VALVE SOV-3125E Y-83	*	Device Tag	PCU-2	N14:28/4	A
PCU-2\SOV-3125E2	Digital	CLOSE VALVE SOV-3125E Y-83	*	Device Tag	PCU-2	N14:28/5	A
PCU-2\SOV-3125G1	Digital	OPEN VALVE SOV-3125G Y-85	*	Device Tag	PCU-2	N14:28/6	A
PCU-2\SOV-3125G2	Digital	CLOSE VALVE SOV-3125G Y-85	*	Device Tag	PCU-2	N14:28/7	A
PCU-2\SOV-3163-1	Digital	OPEN VALVE SOV-3163 Y80-2	*	Device Tag	PCU-2	N14:28/12	A
PCU-2\SOV-3163-2	Digital	CLOSE VALVE SOV-3163 Y80-2	*	Device Tag	PCU-2	N14:28/13	A
PCU-2\SOV-3173A1	Digital	OPEN VALVE SOV-3173A Y87-1	*	Device Tag	PCU-2	N14:28/14	A
PCU-2\SOV-3173A2	Digital	CLOSE VALVE SOV-3173A Y87-1	*	Device Tag	PCU-2	N14:28/15	A
PCU-2\SOV-3173B1	Digital	OPEN VALVE SOV-3173B Y87-2	*	Device Tag	PCU-2	N14:29/0	A
PCU-2\SOV-3173B2	Digital	CLOSE VALVE SOV-3173B Y87-2	*	Device Tag	PCU-2	N14:29/1	A
PCU-2\SOV-3182A1	Digital	OPEN VALVE SOV-3182A Y71	*	Device Tag	PCU-2	N14:29/2	A
PCU-2\SOV-3182A2	Digital	CLOSE VALVE SOV-3182A Y71	*	Device Tag	PCU-2	N14:29/3	A
PCU-2\SOV-3182B1	Digital	OPEN VALVE SOV-3182B Y71	*	Device Tag	PCU-2	N14:29/4	A
PCU-2\SOV-3182B2	Digital	CLOSE VALVE SOV-3182B Y71	*	Device Tag	PCU-2	N14:29/5	A
PCU-2\SOV-3183A1	Digital	OPEN VALVE SOV-3183A Y71	*	Device Tag	PCU-2	N14:29/6	A
PCU-2\SOV-3183A2	Digital	CLOSE VALVE SOV-3183A Y71	*	Device Tag	PCU-2	N14:29/7	A
PCU-2\SOV-3183B1	Digital	OPEN VALVE SOV-3183B Y71	*	Device Tag	PCU-2	N14:29/8	A
PCU-2\SOV-3183B2	Digital	CLOSE VALVE SOV-3183B Y71	*	Device Tag	PCU-2	N14:29/9	A
PCU-2\SOV-3184-1	Digital	OPEN VALVE SOV-3184 Y71	*	Device Tag	PCU-2	N14:29/10	A
PCU-2\SOV-3184-2	Digital	CLOSE VALVE SOV-3184 Y71	*	Device Tag	PCU-2	N14:29/11	A
PCU-3\0_OFF	Digital	ALWAYS OFF PLACE HOLDER FOR PCU-3 VARIABLES	*	Memory Tag			
PCU-3\HS-1000A	Digital	OCS INITIATE TRANSFER Y-70.1	*	Device Tag	PCU-3	N14:122/0	A
PCU-3\HS-1000B	Digital	OCS RESET TRANSFER Y-70.1	*	Device Tag	PCU-3	N14:122/1	A

Tag Name	Tag Type	Tag Description	Security	Data Source	Node Name	Address	Scan Class
PCU-3\HS-1001	Digital	OCS SELECT TRANSFER TYPE 1 Y-70.1	*	Device Tag	PCU-3	N14:122/2	A
PCU-3\HS-1002A	Digital	OCS SELECT TRANSFER TYPE 2A Y-70.1	*	Device Tag	PCU-3	N14:122/3	A
PCU-3\HS-1002B	Digital	OCS SELECT TRANSFER TYPE 2B Y-70.1	*	Device Tag	PCU-3	N14:122/4	A
PCU-3\HS-1003	Digital	OCS SELECT TRANSFER TYPE 3 Y-70.1	*	Device Tag	PCU-3	N14:122/5	A
PCU-3\HS-1010A	Digital	LEAK DETECTION OVERRIDE Y-72.1	*	Device Tag	PCU-3	N14:121/1	A
PCU-3\HS-1010B	Digital	LEAK DETECTION OVERRIDE RESET Y-72.1	*	Device Tag	PCU-3	N14:121/2	A
PCU-3\LDAH-3151	Digital	6241-V SUMP LEAK DETECTION Y72	*	Device Tag	PCU-3	N14:25/13	A
PCU-3\LDXA-3151	Digital	SUMP LEAK DETECTOR Y72	*	Device Tag	PCU-3	N14:25/4	A
PCU-3\MD_SEL_ENAB	Digital	NEW TRANSFER MODE SELECTION ENABLED ON OIT	*	Device Tag	PCU-3	N14:3/8	A
PCU-3\P-3116-SD	Digital	SHUTDOWN SUMP PUMP P-3116 Y-82.1	*	Device Tag	PCU-3	N14:29/2	A
PCU-3\PCU3-SP-AI-6	Analog	SPARE ANALOG INPUT	*	Device Tag	PCU-3	N14:43	A
PCU-3\PCU3-SP-AI-6_A	Digital	PCU-3 INPUT ANALOG OVER OR UNDER RANGE ALARM	*	Device Tag	PCU-3	N14:12/13	A
PCU-3\PCU3-SP-AI-7	Analog	SPARE ANALOG INPUT	*	Device Tag	PCU-3	N14:44	A
PCU-3\PCU3-SP-AI-7_A	Digital	PCU-3 INPUT ANALOG OVER OR UNDER RANGE ALARM	*	Device Tag	PCU-3	N14:12/14	A
PCU-3\PCU3-SP-AI-8	Analog	SPARE ANALOG INPUT	*	Device Tag	PCU-3	N14:45	A
PCU-3\PCU3-SP-AI-8_A	Digital	PCU-3 INPUT ANALOG OVER OR UNDER RANGE ALARM	*	Device Tag	PCU-3	N14:12/15	A
PCU-3\PCU3-SP-I4-16	Digital	SPARE DIGITAL INPUT	*	Device Tag	PCU-3	N14:25/14	A
PCU-3\PCU3-SP-I4-17	Digital	SPARE DIGITAL INPUT	*	Device Tag	PCU-3	N14:25/15	A
PCU-3\PCU3-SP-I4-2	Digital	SPARE DIGITAL INPUT	*	Device Tag	PCU-3	N14:25/2	A
PCU-3\PCU3-SP-I4-3	Digital	SPARE DIGITAL INPUT	*	Device Tag	PCU-3	N14:25/3	A
PCU-3\PCU3-SP-O7-05	Digital	SPARE DIGITAL OUTPUT	*	Device Tag	PCU-3	N14:29/5	A
PCU-3\PCU3-SP-O7-06	Digital	SPARE DIGITAL OUTPUT	*	Device Tag	PCU-3	N14:29/6	A
PCU-3\PCU3-SP-O7-07	Digital	SPARE DIGITAL OUTPUT	*	Device Tag	PCU-3	N14:29/7	A
PCU-3\PCU3-SP-O7-10	Digital	SPARE DIGITAL OUTPUT	*	Device Tag	PCU-3	N14:29/8	A
PCU-3\PCU3-SP-O7-11	Digital	SPARE DIGITAL OUTPUT	*	Device Tag	PCU-3	N14:29/9	A
PCU-3\PCU3-SP-O7-12	Digital	SPARE DIGITAL OUTPUT	*	Device Tag	PCU-3	N14:29/10	A
PCU-3\PCU3-SP-O7-13	Digital	SPARE DIGITAL OUTPUT	*	Device Tag	PCU-3	N14:29/11	A
PCU-3\PCU3-SP-O7-14	Digital	SPARE DIGITAL OUTPUT	*	Device Tag	PCU-3	N14:29/12	A
PCU-3\PCU3-SP-O7-15	Digital	SPARE DIGITAL OUTPUT	*	Device Tag	PCU-3	N14:29/13	A
PCU-3\PCU3-SP-O7-16	Digital	SPARE DIGITAL OUTPUT	*	Device Tag	PCU-3	N14:29/14	A
PCU-3\PCU3-SP-O7-17	Digital	SPARE DIGITAL OUTPUT	*	Device Tag	PCU-3	N14:29/15	A
PCU-3\PCU3-SP-TI-2	Analog	SPARE THERMOCOUPLE INPUT	*	Device Tag	PCU-3	N14:31	A
PCU-3\PCU3-SP-TI-2_A	Digital	PCU-3 INPUT THERMOCOUPLE OVER OR UNDER RANGE ALARM	*	Device Tag	PCU-3	N14:11/1	A
PCU-3\PCU3-SP-TI-4	Analog	SPARE THERMOCOUPLE INPUT	*	Device Tag	PCU-3	N14:33	A
PCU-3\PCU3-SP-TI-4_A	Digital	PCU-3 INPUT THERMOCOUPLE OVER OR UNDER RANGE ALARM	*	Device Tag	PCU-3	N14:11/3	A
PCU-3\PCU3-SP-TI-5	Analog	SPARE THERMOCOUPLE INPUT	*	Device Tag	PCU-3	N14:34	A
PCU-3\PCU3-SP-TI-5_A	Digital	PCU-3 INPUT THERMOCOUPLE OVER OR UNDER RANGE ALARM	*	Device Tag	PCU-3	N14:11/4	A
PCU-3\PCU3-SP-TI-6	Analog	SPARE THERMOCOUPLE INPUT	*	Device Tag	PCU-3	N14:35	A
PCU-3\PCU3-SP-TI-6_A	Digital	PCU-3 INPUT THERMOCOUPLE OVER OR UNDER RANGE ALARM	*	Device Tag	PCU-3	N14:11/5	A
PCU-3\PCU3-SP-TI-7	Analog	SPARE THERMOCOUPLE INPUT	*	Device Tag	PCU-3	N14:36	A
PCU-3\PCU3-SP-TI-7_A	Digital	PCU-3 INPUT THERMOCOUPLE OVER OR UNDER RANGE ALARM	*	Device Tag	PCU-3	N14:11/6	A
PCU-3\PCU3-SP-TI-8	Analog	SPARE THERMOCOUPLE INPUT	*	Device Tag	PCU-3	N14:37	A
PCU-3\PCU3-SP-TI-8_A	Digital	PCU-3 INPUT THERMOCOUPLE OVER OR UNDER RANGE ALARM	*	Device Tag	PCU-3	N14:11/7	A
PCU-3\SOV-3165A1	Digital	OPEN VALVE SOV-3165A Y71	*	Device Tag	PCU-3	N14:28/0	A
PCU-3\SOV-3165A2	Digital	CLOSE VALVE SOV-3165A Y71	*	Device Tag	PCU-3	N14:28/1	A
PCU-3\SOV-3165B1	Digital	OPEN VALVE SOV-3165B Y71	*	Device Tag	PCU-3	N14:28/2	A
PCU-3\SOV-3165B2	Digital	CLOSE VALVE SOV-3165B Y71	*	Device Tag	PCU-3	N14:28/3	A
PCU-3\SOV-3166A1	Digital	OPEN VALVE SOV-3166A Y71	*	Device Tag	PCU-3	N14:28/4	A
PCU-3\SOV-3166A2	Digital	CLOSE VALVE SOV-3166A Y71	*	Device Tag	PCU-3	N14:28/5	A
PCU-3\SOV-3166B1	Digital	OPEN VALVE SOV-3166B Y71	*	Device Tag	PCU-3	N14:28/6	A
PCU-3\SOV-3166B2	Digital	CLOSE VALVE SOV-3166B Y88-1	*	Device Tag	PCU-3	N14:28/7	A
PCU-3\SOV-3167A1	Digital	OPEN VALVE SOV-3167A Y88-1	*	Device Tag	PCU-3	N14:28/8	A
PCU-3\SOV-3167A2	Digital	CLOSE VALVE SOV-3167A Y81-3	*	Device Tag	PCU-3	N14:28/9	A
PCU-3\SOV-3167B1	Digital	OPEN VALVE SOV-3167B Y88-1	*	Device Tag	PCU-3	N14:29/3	A
PCU-3\SOV-3167B2	Digital	CLOSE VALVE SOV-3167B Y88-1	*	Device Tag	PCU-3	N14:29/4	A
PCU-3\SOV-3168A1	Digital	OPEN VALVE SOV-3168A Y81-3	*	Device Tag	PCU-3	N14:28/10	A
PCU-3\SOV-3168A2	Digital	CLOSE VALVE SOV-3168A Y81-4	*	Device Tag	PCU-3	N14:28/11	A
PCU-3\SOV-3168B1	Digital	OPEN VALVE SOV-3168B Y81-4	*	Device Tag	PCU-3	N14:28/12	A
PCU-3\SOV-3168B2	Digital	CLOSE VALVE SOV-3168B Y81-1	*	Device Tag	PCU-3	N14:28/13	A
PCU-3\SOV-3185A1	Digital	OPEN VALVE SOV-3185A Y81-1	*	Device Tag	PCU-3	N14:28/14	A
PCU-3\SOV-3185A2	Digital	CLOSE VALVE SOV-3185A	*	Device Tag	PCU-3	N14:28/15	A
PCU-3\SOV-3185B1	Digital	OPEN VALVE SOV-3185B Y81-2	*	Device Tag	PCU-3	N14:29/0	A
PCU-3\SOV-3185B2	Digital	CLOSE VALVE SOV-3185B Y81-2	*	Device Tag	PCU-3	N14:29/1	A
PCU-4\0_OFF	Digital	ALWAYS OFF PLACE HOLDER FOR PCU-4 VARIABLES	*	Memory Tag			
PCU-4\HS-058E	Digital	OVERRIDE OF 200-E MASTER SHUTDOWN Y-77.1	*	Device Tag	PCU-4	N14:120/4	A
PCU-4\P-200E-SPM	Digital	START PERM. CONTACT FOR 200-E TRANSF. PUMP Y-44.1	*	Device Tag	PCU-4	N14:29/10	A
PCU-4\PCU-4-SP-I3-0	Digital	SPARE DIGITAL INPUT	*	Device Tag	PCU-4	N14:26/0	A
PCU-4\PCU-4-SP-I3-10	Digital	SPARE DIGITAL INPUT	*	Device Tag	PCU-4	N14:26/10	A
PCU-4\PCU-4-SP-I3-11	Digital	SPARE DIGITAL INPUT	*	Device Tag	PCU-4	N14:26/11	A
PCU-4\PCU-4-SP-I3-2	Digital	SPARE DIGITAL INPUT	*	Device Tag	PCU-4	N14:26/2	A
PCU-4\PCU-4-SP-I3-3	Digital	SPARE DIGITAL INPUT	*	Device Tag	PCU-4	N14:26/3	A
PCU-4\PCU-4-SP-I3-4	Digital	SPARE DIGITAL INPUT	*	Device Tag	PCU-4	N14:26/4	A
PCU-4\PCU-4-SP-I3-5	Digital	SPARE DIGITAL INPUT	*	Device Tag	PCU-4	N14:26/5	A
PCU-4\PCU-4-SP-I3-6	Digital	SPARE DIGITAL INPUT	*	Device Tag	PCU-4	N14:26/6	A
PCU-4\PCU-4-SP-I3-7	Digital	SPARE DIGITAL INPUT	*	Device Tag	PCU-4	N14:26/7	A
PCU-4\PCU-4-SP-I3-8	Digital	SPARE DIGITAL INPUT	*	Device Tag	PCU-4	N14:26/8	A
PCU-4\PCU-4-SP-I3-9	Digital	SPARE DIGITAL INPUT	*	Device Tag	PCU-4	N14:26/9	A
PCU-4\PCU4-SP-O7-0	Digital	SPARE DIGITAL OUTPUT	*	Device Tag	PCU-4	N14:29/0	A
PCU-4\PCU4-SP-O7-1	Digital	SPARE DIGITAL OUTPUT	*	Device Tag	PCU-4	N14:29/1	A
PCU-4\PCU4-SP-O7-13	Digital	SPARE DIGITAL OUTPUT	*	Device Tag	PCU-4	N14:29/11	A
PCU-4\PCU4-SP-O7-14	Digital	SPARE DIGITAL OUTPUT	*	Device Tag	PCU-4	N14:29/12	A
PCU-4\PCU4-SP-O7-15	Digital	SPARE DIGITAL OUTPUT	*	Device Tag	PCU-4	N14:29/13	A
PCU-4\PCU4-SP-O7-16	Digital	SPARE DIGITAL OUTPUT	*	Device Tag	PCU-4	N14:29/14	A
PCU-4\PCU4-SP-O7-17	Digital	SPARE DIGITAL OUTPUT	*	Device Tag	PCU-4	N14:29/15	A
PCU-4\PCU4-SP-O7-2	Digital	SPARE DIGITAL OUTPUT	*	Device Tag	PCU-4	N14:29/2	A
PCU-4\PCU4-SP-O7-3	Digital	SPARE DIGITAL OUTPUT	*	Device Tag	PCU-4	N14:29/3	A

Tag Name	Tag Type	Tag Description	Security	Data Source	Node Name	Address	Scan Class
PCU-4\PCU4-SP-O7-4	Digital	SPARE DIGITAL OUTPUT	*	Device Tag	PCU-4	N14:29/4	A
PCU-4\PCU4-SP-O7-5	Digital	SPARE DIGITAL OUTPUT	*	Device Tag	PCU-4	N14:29/5	A
PCU-4\PCU4-SP-O7-6	Digital	SPARE DIGITAL OUTPUT	*	Device Tag	PCU-4	N14:29/6	A
PCU-4\PCU4-SP-O7-7	Digital	SPARE DIGITAL OUTPUT	*	Device Tag	PCU-4	N14:29/7	A
PCU-4\PCU4-SP-O7-8	Digital	SPARE DIGITAL OUTPUT	*	Device Tag	PCU-4	N14:29/8	A
PCU-4\PCU4-SP-O7-9	Digital	SPARE DIGITAL OUTPUT	*	Device Tag	PCU-4	N14:29/9	A
PCU-4\PCU4-SP-TI-2	Analog	SPARE THERMOCOUPLE INPUT	*	Device Tag	PCU-4	N14:39	A
PCU-4\PCU4-SP-TI-2_A	Digital	PCU-4 INPUT THERMOCOUPLE OVER OR UNDER RANGE ALARM	*	Device Tag	PCU-4	N14:12/9	A
PCU-4\PCU4-SP-TI-4	Analog	SPARE THERMOCOUPLE INPUT	*	Device Tag	PCU-4	N14:41	A
PCU-4\PCU4-SP-TI-4_A	Digital	PCU-4 INPUT THERMOCOUPLE OVER OR UNDER RANGE ALARM	*	Device Tag	PCU-4	N14:12/11	A
PCU-4\PCU4-SP-TI-5	Analog	SPARE THERMOCOUPLE INPUT	*	Device Tag	PCU-4	N14:42	A
PCU-4\PCU4-SP-TI-5_A	Digital	PCU-4 INPUT THERMOCOUPLE OVER OR UNDER RANGE ALARM	*	Device Tag	PCU-4	N14:12/12	A
PCU-4\PCU4-SP-TI-6	Analog	SPARE THERMOCOUPLE INPUT	*	Device Tag	PCU-4	N14:43	A
PCU-4\PCU4-SP-TI-6_A	Digital	PCU-4 INPUT THERMOCOUPLE OVER OR UNDER RANGE ALARM	*	Device Tag	PCU-4	N14:12/13	A
PCU-4\PCU4-SP-TI-7	Analog	SPARE THERMOCOUPLE INPUT	*	Device Tag	PCU-4	N14:44	A
PCU-4\PCU4-SP-TI-7_A	Digital	PCU-4 INPUT THERMOCOUPLE OVER OR UNDER RANGE ALARM	*	Device Tag	PCU-4	N14:12/14	A
PCU-4\PCU4-SP-TI-8	Analog	SPARE THERMOCOUPLE INPUT	*	Device Tag	PCU-4	N14:45	A
PCU-4\PCU4-SP-TI-8_A	Digital	PCU-4 INPUT THERMOCOUPLE OVER OR UNDER RANGE ALARM	*	Device Tag	PCU-4	N14:12/15	A
PCU-5\0_OFF	Digital	ALWAYS OFF PLACE HOLDER FOR PCU-5 VARIABLES	*	Memory Tag			
PCU-5\PCU5-SP-I0-01	Digital	SPARE DIGITAL INPUT	*	Device Tag	PCU-5	N14:28/1	A
PCU-5\PCU5-SP-I0-02	Digital	SPARE DIGITAL INPUT	*	Device Tag	PCU-5	N14:28/2	A
PCU-5\PCU5-SP-I0-03	Digital	SPARE DIGITAL INPUT	*	Device Tag	PCU-5	N14:28/3	A
PCU-5\PCU5-SP-I0-04	Digital	SPARE DIGITAL INPUT	*	Device Tag	PCU-5	N14:28/4	A
PCU-5\PCU5-SP-I0-05	Digital	SPARE DIGITAL INPUT	*	Device Tag	PCU-5	N14:28/5	A
PCU-5\PCU5-SP-I0-06	Digital	SPARE DIGITAL INPUT	*	Device Tag	PCU-5	N14:28/6	A
PCU-5\PCU5-SP-I0-07	Digital	SPARE DIGITAL INPUT	*	Device Tag	PCU-5	N14:28/7	A
PCU-5\PCU5-SP-I0-10	Digital	SPARE DIGITAL INPUT	*	Device Tag	PCU-5	N14:28/8	A
PCU-5\PCU5-SP-I0-11	Digital	SPARE DIGITAL INPUT	*	Device Tag	PCU-5	N14:28/9	A
PCU-5\PCU5-SP-I0-12	Digital	SPARE DIGITAL INPUT	*	Device Tag	PCU-5	N14:28/10	A
PCU-5\PCU5-SP-I0-13	Digital	SPARE DIGITAL INPUT	*	Device Tag	PCU-5	N14:28/11	A
PCU-5\PCU5-SP-I0-14	Digital	SPARE DIGITAL INPUT	*	Device Tag	PCU-5	N14:28/12	A
PCU-5\PCU5-SP-I0-15	Digital	SPARE DIGITAL INPUT	*	Device Tag	PCU-5	N14:28/13	A
PCU-5\PCU5-SP-I0-16	Digital	SPARE DIGITAL INPUT	*	Device Tag	PCU-5	N14:28/14	A
PCU-5\PCU5-SP-I0-17	Digital	SPARE DIGITAL INPUT	*	Device Tag	PCU-5	N14:28/15	A
SyncTAD\PCU-1\Day	Analog	SyncTAD day tag. Do not modify.	*	Device Tag	PCU-1	S:20	A
SyncTAD\PCU-1\Hour	Analog	SyncTAD hour tag. Do not modify.	*	Device Tag	PCU-1	S:21	A
SyncTAD\PCU-1\Minute	Analog	SyncTAD minute tag. Do not modify.	*	Device Tag	PCU-1	S:22	A
SyncTAD\PCU-1\Month	Analog	SyncTAD month tag. Do not modify.	*	Device Tag	PCU-1	S:19	A
SyncTAD\PCU-1\Second	Analog	SyncTAD second tag. Do not modify.	*	Device Tag	PCU-1	S:23	A
SyncTAD\PCU-1\Year	Analog	SyncTAD year tag. Do not modify.	*	Device Tag	PCU-1	S:18	A
SyncTAD\PCU-2\Day	Analog	SyncTAD day tag. Do not modify.	*	Device Tag	PCU-2	S:20	A
SyncTAD\PCU-2\Hour	Analog	SyncTAD hour tag. Do not modify.	*	Device Tag	PCU-2	S:21	A
SyncTAD\PCU-2\Minute	Analog	SyncTAD minute tag. Do not modify.	*	Device Tag	PCU-2	S:22	A
SyncTAD\PCU-2\Month	Analog	SyncTAD month tag. Do not modify.	*	Device Tag	PCU-2	S:19	A
SyncTAD\PCU-2\Second	Analog	SyncTAD second tag. Do not modify.	*	Device Tag	PCU-2	S:23	A
SyncTAD\PCU-2\Year	Analog	SyncTAD year tag. Do not modify.	*	Device Tag	PCU-2	S:18	A
SyncTAD\PCU-3\Day	Analog	SyncTAD day tag. Do not modify.	*	Device Tag	PCU-3	S:20	A
SyncTAD\PCU-3\Hour	Analog	SyncTAD hour tag. Do not modify.	*	Device Tag	PCU-3	S:21	A
SyncTAD\PCU-3\Minute	Analog	SyncTAD minute tag. Do not modify.	*	Device Tag	PCU-3	S:22	A
SyncTAD\PCU-3\Month	Analog	SyncTAD month tag. Do not modify.	*	Device Tag	PCU-3	S:19	A
SyncTAD\PCU-3\Second	Analog	SyncTAD second tag. Do not modify.	*	Device Tag	PCU-3	S:23	A
SyncTAD\PCU-3\Year	Analog	SyncTAD year tag. Do not modify.	*	Device Tag	PCU-3	S:18	A
SyncTAD\PCU-4\Day	Analog	SyncTAD day tag. Do not modify.	*	Device Tag	PCU-4	S:20	A
SyncTAD\PCU-4\Hour	Analog	SyncTAD hour tag. Do not modify.	*	Device Tag	PCU-4	S:21	A
SyncTAD\PCU-4\Minute	Analog	SyncTAD minute tag. Do not modify.	*	Device Tag	PCU-4	S:22	A
SyncTAD\PCU-4\Month	Analog	SyncTAD month tag. Do not modify.	*	Device Tag	PCU-4	S:19	A
SyncTAD\PCU-4\Second	Analog	SyncTAD second tag. Do not modify.	*	Device Tag	PCU-4	S:23	A
SyncTAD\PCU-4\Year	Analog	SyncTAD year tag. Do not modify.	*	Device Tag	PCU-4	S:18	A
SyncTAD\PCU-5\Day	Analog	SyncTAD day tag. Do not modify.	*	Device Tag	PCU-5	S:20	A
SyncTAD\PCU-5\Hour	Analog	SyncTAD hour tag. Do not modify.	*	Device Tag	PCU-5	S:21	A
SyncTAD\PCU-5\Minute	Analog	SyncTAD minute tag. Do not modify.	*	Device Tag	PCU-5	S:22	A
SyncTAD\PCU-5\Month	Analog	SyncTAD month tag. Do not modify.	*	Device Tag	PCU-5	S:19	A
SyncTAD\PCU-5\Second	Analog	SyncTAD second tag. Do not modify.	*	Device Tag	PCU-5	S:23	A
SyncTAD\PCU-5\Year	Analog	SyncTAD year tag. Do not modify.	*	Device Tag	PCU-5	S:18	A
system\AlarmMostRecentDate	String	Date of most recent most severe alarm	*	Memory Tag			
system\AlarmMostRecentLabel	String	Label of most recent most severe alarm	*	Memory Tag			
system\AlarmMostRecentSeverity	Analog	Severity of most recent most severe alarm	*	Memory Tag			
system\AlarmMostRecentTagDesc	String	Description of tag for most recent most severe alarm	*	Memory Tag			
system\AlarmMostRecentTagname	String	Name of tag for most recent most severe alarm	*	Memory Tag			
system\AlarmMostRecentTime	String	Time of most recent most severe alarm	*	Memory Tag			
system\AlarmMostRecentUnits	String	Units of tag for most recent most severe alarm	*	Memory Tag			
system\AlarmSuppressedCount	Analog	Number of suppressed Alarmable tags	*	Memory Tag			
system\ComErrorStringDDE	String		*	Memory Tag			
system\ComErrorStringOPC	String		*	Memory Tag			
system\ComErrorValueDDE	Analog		*	Memory Tag			
system\ComErrorValueOPC	Analog		*	Memory Tag			
system\ComStatusStringDDE	String		*	Memory Tag			
system\ComStatusStringOPC	String		*	Memory Tag			
system\ComStatusValueDDE	Analog		*	Memory Tag			
system\ComStatusValueOPC	Analog		*	Memory Tag			
system\Date	String	System date string	*	Memory Tag			
system\DateAndTimeInteger	Analog	System date and time integer	*	Memory Tag			
system\DayOfWeek	Analog	Day of Week (Sunday = 1)	*	Memory Tag			
system\DayOfYear	Analog	Day of Year	*	Memory Tag			
system\MemoryB1Meg	Analog	Available memory below 1 Meg, in KB	*	Memory Tag			
system\MemoryGDI	Analog	Percentage of free GDI resources	*	Memory Tag			

Tag Name	Tag Type	Tag Description	Security	Data Source	Node Name	Address	Scan Class
system\MemoryUser	Analog	Percentage of free User resources	*	Memory Tag			
system\MemoryVirtual	Analog	Available virtual memory in KB	*	Memory Tag			
system\MonthString	String	Month as string	*	Memory Tag			
system\User	String	Currently logged on User	*	Memory Tag			
TEST_2	Digital	TEST HOLDING BIT	*	Memory Tag			
TEST_3	Digital	TEST HOLDING BIT	*	Memory Tag			
Tnd_test\CurrentFile	Analog	Current datalog file displayed by trend.	*	Memory Tag			
Tnd_test\CurrentPen	Analog	Current trend pen selected.	*	Memory Tag			
Tnd_test\NewestFile	Analog	Offset to the newest data log file.	*	Memory Tag			
Tnd_test\NewestTime	Analog	Time of newest data available to trend	*	Memory Tag			
Tnd_test\OldestFile	Analog	Offset to the oldest data log file.	*	Memory Tag			
Tnd_test\OldestTime	Analog	Time of oldest data available to trend.	*	Memory Tag			
Tnd_test\Paused	Digital	Pause trend display at current time	*	Memory Tag			
Tnd_test\PenMask	Analog	Enable/disable display of trend pens	*	Memory Tag			
Tnd_test\StartTime	Analog	Current start time of the trend.	*	Memory Tag			
Tnd_test\TimeRange	Analog	Time range in seconds of trend display	*	Memory Tag			
Tnd_test\YMag	Analog	Magnification of trend Y axis.	*	Memory Tag			
Tnd_test\YOffset	Analog	Offset of trend Y axis.	*	Memory Tag			
Trnd_tf\CurrentPen	Analog	Current trend pen selected.	*	Memory Tag			
Trnd_tf\PenMask	Analog	Enable/disable display of trend pens	*	Memory Tag			
Trnd_tf\StartTimeDate	String	Start Date	*	Memory Tag			
Trnd_tf\Updating	Digital	Is datamodel in the process of updating	*	Memory Tag			
Trnd_tr\CurrentFile	Analog	Current datalog file displayed by trend.	*	Memory Tag			
Trnd_tr\CurrentPen	Analog	Current trend pen selected.	*	Memory Tag			
Trnd_tr\NewestFile	Analog	Offset to the newest data log file.	*	Memory Tag			
Trnd_tr\OldestFile	Analog	Offset to the oldest data log file.	*	Memory Tag			
Trnd_tr\PenMask	Analog	Enable/disable display of trend pens	*	Memory Tag			
Trnd_tr\StartTimeDate	String	Start Date	*	Memory Tag			
Trnd_tr\Updating	Digital	Is datamodel in the process of updating	*	Memory Tag			

1.5 System\Tag Monitor

1.5.1 System\Tag Monitor\HeartBeat

Tag Name	Tag Type	Tag Description
PCU-1\BATT_BAD_PLC1	Digital	PLC-1 BATTERY IS BAD OR MISSING
PCU-1\COM-1_OCS	Digital	COMMUN. WITH OCS IGNORED
PCU-1\HB_COMM_CNT	Analog	Communications checking counter
PCU-1\HB_COMM_OK	Digital	Communications from PLC currently OK
PCU-1\HB_OCS_PLC1	Digital	HEARTBEAT FROM OCS TO PLC-1
PCU-1\HB_PLC1_OCS	Digital	HEARTBEAT FROM PLC-1 TO OCS
PCU-1\HB_PLC1_OCS_BOTH	Analog	COMMUN. HEARTBEAT REGISTER FROM PCU-1 TO BOTH OPERATOR TERMINALS
PCU-1\HB_REF	Analog	Communications heartbeat reference register
PCU-2\BATT_BAD_PLC2	Digital	PLC-2 BATTERY IS BAD OR MISSING
PCU-2\COM-2_OCS	Digital	COMMUN. WITH OCS IGNORED
PCU-2\HB_COMM_CNT	Analog	Communications checking counter
PCU-2\HB_COMM_OK	Digital	Communications from PLC currently OK
PCU-2\HB_OCS_PLC2	Digital	HEARTBEAT FROM OCS TO PLC-2
PCU-2\HB_PLC2_OCS	Digital	HEARTBEAT FROM PLC-2 TO OCS
PCU-2\HB_PLC2_OCS_BOTH	Analog	COMMUN. HEARTBEAT REGISTER FROM PCU-2 TO BOTH OPERATOR TERMINALS
PCU-2\HB_REF	Analog	Communications heartbeat reference register
PCU-3\BATT_BAD_PLC3	Digital	PLC-3 BATTERY IS BAD OR MISSING
PCU-3\COM-3_OCS	Digital	COMMUNICATION WITH OCS IGNORED
PCU-3\HB_COMM_CNT	Analog	Communications checking counter
PCU-3\HB_COMM_OK	Digital	Communications from PLC currently OK
PCU-3\HB_OCS_PLC3	Digital	HEARTBEAT FROM OCS TO PLC-3
PCU-3\HB_PLC3_OCS	Digital	HEARTBEAT FROM PLC-3 TO OCS
PCU-3\HB_PLC3_OCS_BOTH	Analog	COMMUN. HEARTBEAT REGISTER FROM PCU-3 TO BOTH OPERATOR TERMINALS
PCU-3\HB_REF	Analog	Communications heartbeat reference register
PCU-4\BATT_BAD_PLC4	Digital	PLC-4 BATTERY IS BAD OR MISSING
PCU-4\COM-4_OCS	Digital	COMMUN. WITH OCS IGNORED
PCU-4\HB_COMM_CNT	Analog	Communications checking counter
PCU-4\HB_COMM_OK	Digital	Communications from PLC currently OK
PCU-4\HB_OCS_PLC4	Digital	HEARTBEAT FROM OCS TO PLC-4
PCU-4\HB_PLC4_OCS	Digital	HEARTBEAT FROM PLC-4 TO OCS
PCU-4\HB_PLC4_OCS_BOTH	Analog	COMMUN. HEARTBEAT REGISTER FROM PCU-4 TO BOTH OPERATOR TERMINALS
PCU-4\HB_REF	Analog	Communications heartbeat reference register
PCU-5\BATT_BAD_PLC5	Digital	PLC-5 BATTERY IS BAD OR MISSING
PCU-5\COM-5_OCS	Digital	COMMUN. WITH OCS IGNORED
PCU-5\HB_COMM_CNT	Analog	Communications checking counter
PCU-5\HB_COMM_OK	Digital	Communications from PLC currently OK
PCU-5\HB_OCS_PLC5	Digital	HEARTBEAT FROM OCS TO PLC-5
PCU-5\HB_PLC5_OCS	Digital	HEARTBEAT FROM PLC-5 TO OCS
PCU-5\HB_PLC5_OCS_BOTH	Analog	COMMUN. HEARTBEAT REGISTER FROM PCU-5 TO BOTH OPERATOR TERMINALS
PCU-5\HB_REF	Analog	Communications heartbeat reference register

1.6 System\User Accounts

1.6.1 Setup

Option	Selection
Use NT User Accounts as Source For RSView32 User Accounts	No

1.6.2 Account Information

	Account	Login Command	Logout Command	A	B	C	D	E	F	G	H	I	J	K	L	M	N	O	P
1	DEFAULT			N	N	N	Y	Y	Y	Y	Y	Y	Y	Y	Y	Y	Y	Y	Y
2	ENGINEER	SECURITY = 3	SECURITY = 0	Y	Y	Y	Y	Y	Y	Y	Y	Y	Y	Y	Y	Y	Y	Y	Y
3	NPO	SECURITY = 1	SECURITY = 0	N	N	Y	Y	Y	Y	Y	Y	Y	Y	Y	Y	Y	Y	Y	Y
4	PCS	SECURITY = 3	SECURITY = 0	Y	Y	Y	Y	Y	Y	Y	Y	Y	Y	Y	Y	Y	Y	Y	Y
5	SHIFTMGR	SECURITY = 2	SECURITY = 0	N	Y	Y	Y	Y	Y	Y	Y	Y	Y	Y	Y	Y	Y	Y	Y

1.6.3 Database Tags Used by the Component

Tag Name	Tag Type	Tag Description
SECURITY	Analog	PRESENT SECURITY LEVEL

1.7 System\Security Codes

1.7.1 Setup

Option	Selection
Strict Security On	Yes

1.7.2 Information

	Command	Security Code	Description
1	DEFAULT	*	Default undefined-object security code.
2	ACCOUNT	A	
3	COMMANDLINE	B	Command line access to suppress alarms
4	PROJECT	A	
5	PROJECTSHOW	A	
6	PROJECTSTOP	A	
7	QUIT	C	

1.8 System\Activity Log Setup

1.8.1 Setup

Option	Selection
Primary Path	C:\Cr-Site\Logs\ACTLOG
Printer Port	Epson LQ-870 ESC/P 2 on LPT1:
Use RSView32 6.0 Log File Format	No
Use long file names (if supported)	Yes

1.8.2 File Management

Start New Files	When to Start New Files	Delete Oldest Files	Number	Units
Periodic rate	Daily (Changed at Midnight)	After Maximum	30	Files

1.8.3 Categories

Label	Errors Logged To	Warnings Logged To	Information Logged To
Commands	Log File+Activity Bar	Log File+Activity Bar	Log File
Applications	Log File+Activity Bar	Log File+Activity Bar	Log File
Remarks	Log File+Activity Bar	Log File+Activity Bar	Log File
Communications	Log File+Activity Bar	Log File+Activity Bar	Log File
Tag Write	Log File+Activity Bar	Log File+Activity Bar	Log File
Tag Read	Log File+Activity Bar	Log File+Activity Bar	
Custom1	Log File+Activity Bar	Log File+Activity Bar	Log File
Custom2	Log File+Activity Bar	Log File+Activity Bar	Log File
Custom3	Log File+Activity Bar	Log File+Activity Bar	Log File
Custom4	Log File+Activity Bar	Log File+Activity Bar	Log File

1.9 System\Startup

Section	Preference	Value	Selection
Preference Switches	Title Bar	Off	
	Menu	Off	
	Activity Bar	On	
	Minimize Button	Off	

Section	Preference	Value	Selection
	Maximize Button	Off	
	Control Box	Off	
	Project Manager	Off	
Disable Switches	Disable Ctrl-Alt-P (Project Manager)	On	
	Disable Ctrl-Alt-Del, Alt-Tab (Windows 9x Only)	Off	
	Disable Switch to Other Apps (Windows 9x and Windows NT 4.0)	Off	
Startup	Alarming	On	
	Communication Status	On	
	OPC/DDE Server	Off	
	Data Logging	Off	
	Global Key File	Off	
	Derived Tags	Off	
	Event Detector	Off	
	Startup Macro	On	StartMac
	Shutdown Macro	On	StopMac
	Initial Graphic	Off	

2 GRAPHICS

2.1 Graphics\ActiveX Control Setup

No ActiveX Controls detected in the project.

2.2.1 Graphics\Display\00Entry

TEST ENTRY

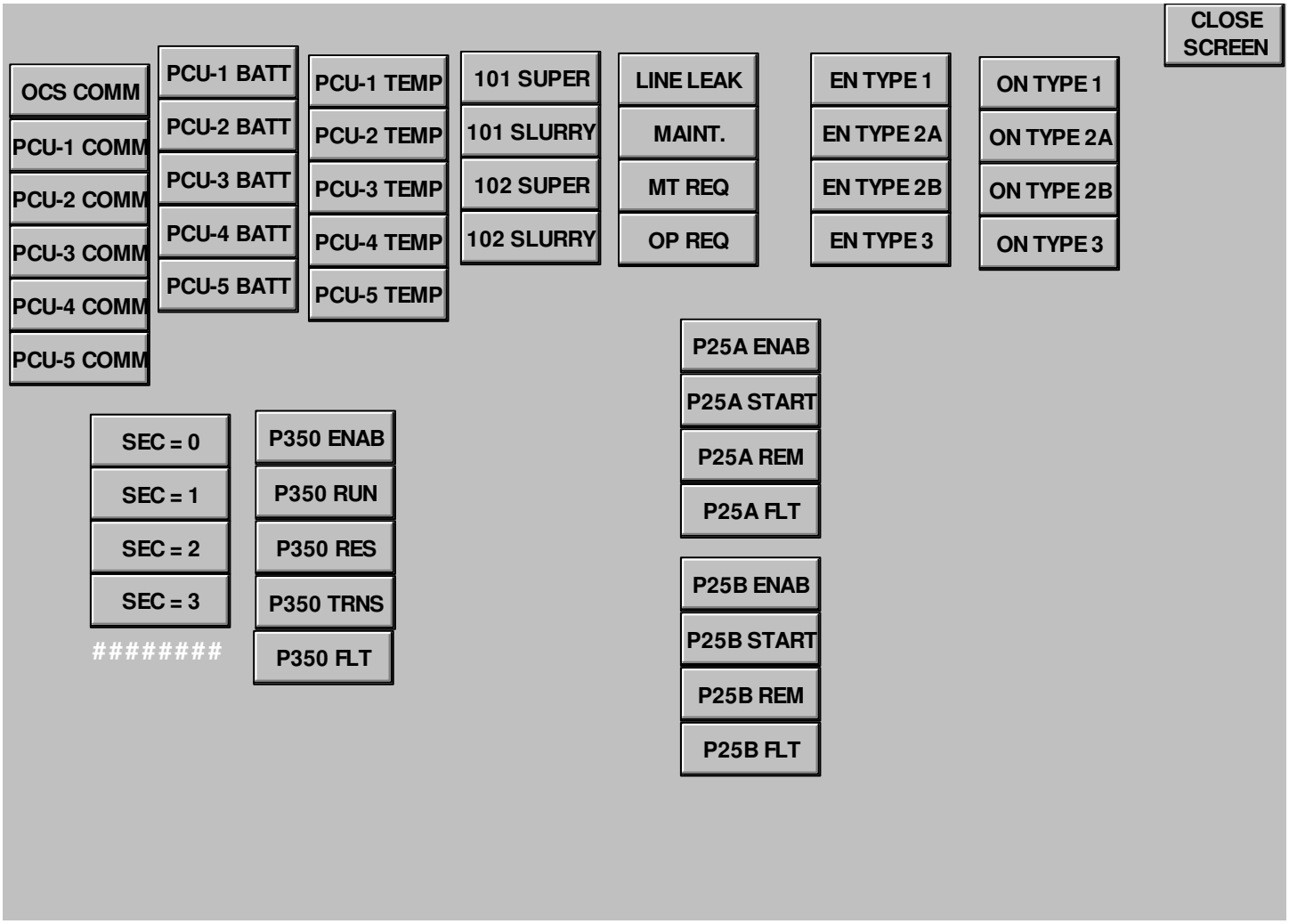

2.2.1.1 Display Settings

Section	Option	Selection
Properties	Display Type	Overlay
	Allow Multiple Running Copies	No
	Cache after Displaying	No
	Title Bar	Yes "TEST ENTRY"
	System Menu	Yes
	Minimize Button	Yes
	Maximize Button	No
	Size to Main Window at Runtime	Yes
	Show last Acquired Value	Yes
	Use Current Size	No (Size in Pixels: 700 x 500)
	Allow Display to be Resized	Yes: When Resized - Scale
	Use Current Position	No (Position in Pixels: 0 x 0)
	Security Code	*
	Background Color	0xC0C0C0
Behavior	Startup Command	
	Shutdown Command	
	Input Field Not Selected Text Color	0x0
	Input Field Not Selected Fill Color	0xFFFFFF
	Input Field Selected Text Color	0xFFFFFF
	Input Field Selected Fill Color	0x8000
	Beep on Press of Interactive Object	No
	Highlight when Cursor Passes Over Interactive Objects	Yes Highlight Color: 0x0
	Highlight Color of Objects with Input Focus	0x808080
	Display On-screen Keyboard	No

2.2.1.2 Animated Display Objects

Object Name	Grouping	X	Y	Property	Expression
Button1		85	23	Button Toggle: "PCU-1 BATT" Button Toggle: "PCU-1 BATT": Touch Control: Press Action	PCU-1\BATT_BAD_PLC1 Toggle PCU-1\BATT_BAD_PLC1
Button2		85	52	Button Toggle: "PCU-2 BATT" Button Toggle: "PCU-2 BATT": Touch Control: Press Action	PCU-2\BATT_BAD_PLC2 Toggle PCU-2\BATT_BAD_PLC2
Button3		85	81	Button Toggle: "PCU-3 BATT" Button Toggle: "PCU-3 BATT": Touch Control: Press Action	PCU-3\BATT_BAD_PLC3 Toggle PCU-3\BATT_BAD_PLC3
Button4		85	110	Button Toggle: "PCU-4 BATT" Button Toggle: "PCU-4 BATT": Touch Control: Press Action	PCU-4\BATT_BAD_PLC4 Toggle PCU-4\BATT_BAD_PLC4
Button5		85	139	Button Toggle: "PCU-5 BATT" Button Toggle: "PCU-5 BATT": Touch Control: Press Action	PCU-5\BATT_BAD_PLC5 Toggle PCU-5\BATT_BAD_PLC5
Button6		167	28	Button Toggle: "PCU-1 TEMP" Button Toggle: "PCU-1 TEMP": Touch Control: Press Action	PCU-1\TAH_CAB_PLC1 Toggle PCU-1\TAH_CAB_PLC1
Button7		167	57	Button Toggle: "PCU-2 TEMP" Button Toggle: "PCU-2 TEMP": Touch Control: Press Action	PCU-2\TAH_CAB_PLC2 Toggle PCU-2\TAH_CAB_PLC2
Button8		167	86	Button Toggle: "PCU-3 TEMP" Button Toggle: "PCU-3 TEMP": Touch Control: Press Action	PCU-3\TAH_CAB_PLC3 Toggle PCU-3\TAH_CAB_PLC3
Button9		167	115	Button Toggle: "PCU-4 TEMP" Button Toggle: "PCU-4 TEMP": Touch Control: Press Action	PCU-4\TAH_CAB_PLC4 Toggle PCU-4\TAH_CAB_PLC4
Button10		167	144	Button Toggle: "PCU-5 TEMP" Button Toggle: "PCU-5 TEMP": Touch Control: Press Action	PCU-5\TAH_CAB_PLC5 Toggle PCU-5\TAH_CAB_PLC5
Button11		4	63	Button Toggle: "PCU-1 COMM" Button Toggle: "PCU-1 COMM": Touch Control: Press Action	PCU-1\COM-12 Toggle PCU-1\COM-12
Button12		4	92	Button Toggle: "PCU-2 COMM" Button Toggle: "PCU-2 COMM": Touch Control: Press Action	PCU-2\COM-23 Toggle PCU-2\COM-23
Button13		4	121	Button Toggle: "PCU-3 COMM" Button Toggle: "PCU-3 COMM": Touch Control: Press Action	PCU-3\COM-34 Toggle PCU-3\COM-34
Button14		4	150	Button Toggle: "PCU-4 COMM" Button Toggle: "PCU-4 COMM": Touch Control: Press Action	PCU-4\COM-45 Toggle PCU-4\COM-45
Button15		4	179	Button Toggle: "PCU-5 COMM" Button Toggle: "PCU-5 COMM": Touch Control: Press Action	PCU-5\COM-51 Toggle PCU-5\COM-51
Button16		4	33	Button Toggle: "OCS COMM" Button Toggle: "OCS COMM": Touch Control: Press Action	PCU-1\COM-OCS_1 Toggle PCU-1\COM-OCS_1
Button17		250	26	Button Toggle: "101 SUPER" Button Toggle: "101 SUPER": Touch Control: Press Action	PCU-3\MD_SU_101 Toggle PCU-3\MD_SU_101
Button18		250	55	Button Toggle: "101 SLURRY" Button Toggle: "101 SLURRY": Touch Control: Press Action	PCU-3\MD_SL_101 Toggle PCU-3\MD_SL_101
Button19		250	84	Button Toggle: "102 SUPER" Button Toggle: "102 SUPER": Touch Control: Press Action	PCU-3\MD_SU_102 Toggle PCU-3\MD_SU_102
Button20		250	113	Button Toggle: "102 SLURRY" Button Toggle: "102 SLURRY": Touch Control: Press Action	PCU-3\MD_SL_102 Toggle PCU-3\MD_SL_102
Button21		336	27	Button Toggle: "LINE LEAK" Button Toggle: "LINE LEAK": Touch Control: Press Action	PCU-3\LDA-TR-LINE Toggle PCU-3\LDA-TR-LINE
Button22		336	56	Button Toggle: "MAINT." Button Toggle: "MAINT.": Touch Control: Press Action	MAINTENANCE_STATION Toggle MAINTENANCE_STATION
Button23		336	85	Button Toggle: "MT REQ" Button Toggle: "MT REQ": Touch Control: Press Action	PCU-3\D_OVR_REQ_M Toggle PCU-3\D_OVR_REQ_M
Button24		336	114	Button Toggle: "OP REQ" Button Toggle: "OP REQ": Touch Control: Press Action	PCU-3\D_OVR_REQ_O Toggle PCU-3\D_OVR_REQ_O
Button29		441	27	Button Toggle: "EN TYPE 1" Button Toggle: "EN TYPE 1": Touch Control: Press Action	PCU-3\TR_EN_1001 Toggle PCU-3\TR_EN_1001
Button30		441	56	Button Toggle: "EN TYPE 2A" Button Toggle: "EN TYPE 2A": Touch Control: Press Action	PCU-3\TR_EN_1002A Toggle PCU-3\TR_EN_1002A
Button31		441	85	Button Toggle: "EN TYPE 2B" Button Toggle: "EN TYPE 2B": Touch Control: Press Action	PCU-3\TR_EN_1002B Toggle PCU-3\TR_EN_1002B
Button32		441	114	Button Toggle: "EN TYPE 3" Button Toggle: "EN TYPE 3": Touch Control: Press Action	PCU-3\TR_EN_1003 Toggle PCU-3\TR_EN_1003
Button33		533	29	Button Toggle: "ON TYPE 1" Button Toggle: "ON TYPE 1": Touch Control: Press Action	PCU-3\TR_ON_1001 Toggle PCU-3\TR_ON_1001
Button34		533	58	Button Toggle: "ON TYPE 2A" Button Toggle: "ON TYPE 2A": Touch Control: Press Action	PCU-3\TR_ON_1002A Toggle PCU-3\TR_ON_1002A
Button35		533	87	Button Toggle: "ON TYPE 2B" Button Toggle: "ON TYPE 2B": Touch Control: Press Action	PCU-3\TR_ON_1002B Toggle PCU-3\TR_ON_1002B
Button36		533	116	Button Toggle: "ON TYPE 3" Button Toggle: "ON TYPE 3": Touch Control: Press Action	PCU-3\TR_ON_1003 Toggle PCU-3\TR_ON_1003
Button25		48	224	Button: "SEC = 0": Touch Control: Press Action	SECURITY=0
Button26		48	253	Button: "SEC = 1": Touch Control: Press Action	SECURITY=1
Button27		48	282	Button: "SEC = 2": Touch Control: Press Action	SECURITY=2
Button28		48	311	Button: "SEC = 3": Touch Control: Press Action	SECURITY=3
NumericDisplay1		49	345	Numeric Display	SECURITY

Object Name	Grouping	X	Y	Property	Expression
Button37		370	172	Button Toggle: "P25A ENAB" Button Toggle: "P25A ENAB": Touch Control: Press Action	PCU-2\P-3125A2 Toggle PCU-2\P-3125A2
Button38		370	202	Button Toggle: "P25A START" Button Toggle: "P25A START": Touch Control: Press Action	PCU-2\P-3125A1 Toggle PCU-2\P-3125A1
Button39		370	232	Button Toggle: "P25A REM" Button Toggle: "P25A REM": Touch Control: Press Action	PCU-2\YL-3125A3 Toggle PCU-2\YL-3125A3
Button40		370	262	Button Toggle: "P25A FLT" Button Toggle: "P25A FLT": Touch Control: Press Action	PCU-2\XA-3125A Toggle PCU-2\XA-3125A
Button41		370	302	Button Toggle: "P25B ENAB" Button Toggle: "P25B ENAB": Touch Control: Press Action	PCU-2\P-3125B2 Toggle PCU-2\P-3125B2
Button42		370	332	Button Toggle: "P25B START" Button Toggle: "P25B START": Touch Control: Press Action	PCU-2\P-3125B1 Toggle PCU-2\P-3125B1
Button43		370	362	Button Toggle: "P25B REM" Button Toggle: "P25B REM": Touch Control: Press Action	PCU-2\YL-3125B3 Toggle PCU-2\YL-3125B3
Button44		370	392	Button Toggle: "P25B FLT" Button Toggle: "P25B FLT": Touch Control: Press Action	PCU-2\XA-3125B Toggle PCU-2\XA-3125B
Button45		138	222	Button Toggle: "P350 ENAB"	PCU-1\P-101E
Button46		138	252	Button Toggle: "P350 RUN"	PCU-1\P-101R
Button47		138	282	Button Toggle: "P350 RES"	PCU-1\ZL-3101C
Button48		137	342	Button Toggle: "P350 FLT"	PCU-1\XA-350
Button49		138	312	Button Toggle: "P350 TRNS"	PCU-1\ZL-3101D
Button50		634	0	Button: "CLOSE SCREEN": Touch Control: Press Action	Abort Me

2.2.1.3 Database Tags Used by the Component

Tag Name	Tag Type	Tag Description
MAINTENANCE_STATION	Digital	OIT STATION SELECTION - TRUE=MAINTENANCE, FALSE=OPERATOR
PCU-1\BATT_BAD_PLC1	Digital	PLC-1 BATTERY IS BAD OR MISSING
PCU-1\COM-12	Digital	COMMUN. WITH PCU-2 IGNORED
PCU-1\COM-OCS_1	Digital	COMMUN. WITH PCU-1 IGNORED - DETECTED AT OCS
PCU-1\P-101E	Digital	TRANSFER PUMP SY-101-WT-P-350 ENABLED
PCU-1\P-101R	Digital	TRANSFER PUMP SY-101-WT-P-350 RUNNING
PCU-1\TAH_CAB_PLC1	Digital	PLC-1 CABINET HIGH TEMPERATURE [OFF = ALARM]
PCU-1\XA-350	Digital	SY-101-WT-P-350 TRANSFER PUMP FAILURE
PCU-1\ZL-3101C	Digital	TRANSFER PUMP SY-101-WT-P-350 RECIRCULATION MODE
PCU-1\ZL-3101D	Digital	TRANSFER PUMP SY-101-WT-P-350 TRANSFER MODE
PCU-2\BATT_BAD_PLC2	Digital	PLC-2 BATTERY IS BAD OR MISSING
PCU-2\COM-23	Digital	COMMUN. WITH PCU-3 IGNORED
PCU-2\P-3125A1	Digital	START PUMP P-3125A Y74-1
PCU-2\P-3125A2	Digital	STOP PUMP P-3125A Y74-1
PCU-2\P-3125B1	Digital	START PUMP P-3125B Y74-2
PCU-2\P-3125B2	Digital	STOP PUMP P-3125B Y74-2
PCU-2\TAH_CAB_PLC2	Digital	PLC-2 CABINET HIGH TEMPERATURE [OFF = ALARM]
PCU-2\XA-3125A	Digital	BOOSTER PUMP P-3125A FAILURE Y-74.1
PCU-2\XA-3125B	Digital	BOOSTER PUMP P-3125B FAILURE Y-74.2
PCU-2\YL-3125A3	Digital	LOCAL/REMOTE STATUS FOR P-3125A [ON = REMOTE] OIT
PCU-2\YL-3125B3	Digital	LOCAL/REMOTE STATUS FOR P-3125B [ON = REMOTE] OIT
PCU-3\BATT_BAD_PLC3	Digital	PLC-3 BATTERY IS BAD OR MISSING
PCU-3\COM-34	Digital	COMMUN. WITH PCU-4 IGNORED
PCU-3\D_OVR_REQ_M	Digital	DISPLAY OVERVIEW SCREEN ON MAINTENANCE REQUEST
PCU-3\D_OVR_REQ_O	Digital	DISPLAY OVERVIEW SCREEN ON OPERATIONS REQUEST
PCU-3\LDA-TR-LINE	Digital	TRANSFER LINE LEAK DETECTED Y-72.1 (COMBINED ALARM)
PCU-3\MD_SL_101	Digital	SLURRY MODE TRANSFER FROM SY101 SELECTED
PCU-3\MD_SL_102	Digital	SLURRY MODE TRANSFER FROM SY102 SELECTED
PCU-3\MD_SU_101	Digital	SUPERNATE MOVE TRANSFER FROM SY101 SELECTED
PCU-3\MD_SU_102	Digital	SUPERNATE MODE TRANSFER FROM SY102 SELECTED
PCU-3\TAH_CAB_PLC3	Digital	PLC-3 CABINET HIGH TEMPERATURE [OFF = ALARM]
PCU-3\TR_EN_1001	Digital	ENABLE TRANSFER 1 241-SY-A TO 241-A-B Y-70.1
PCU-3\TR_EN_1002A	Digital	ENABLE TRANSFER 2A 241-SY-B TO 241-A-A Y-70.1
PCU-3\TR_EN_1002B	Digital	ENABLE TRANSFER 2B 241-SY-B TO 241-A-A Y-70.1
PCU-3\TR_EN_1003	Digital	ENABLE TRANSFER 3 241-A-B TO 241-SY-A Y-70.1
PCU-3\TR_ON_1001	Digital	TRANSFER 1 INITIATED Y-41.1
PCU-3\TR_ON_1002A	Digital	TRANSFER 2A INITIATED Y-42.1
PCU-3\TR_ON_1002B	Digital	TRANSFER 2B INITIATED Y-43.1
PCU-3\TR_ON_1003	Digital	TRANSFER 3 INITIATED Y-44.1
PCU-4\BATT_BAD_PLC4	Digital	PLC-4 BATTERY IS BAD OR MISSING
PCU-4\COM-45	Digital	COMMUN. WITH PCU-5 IGNORED
PCU-4\TAH_CAB_PLC4	Digital	PLC-4 CABINET HIGH TEMPERATURE [OFF = ALARM]
PCU-5\BATT_BAD_PLC5	Digital	PLC-5 BATTERY IS BAD OR MISSING
PCU-5\COM-51	Digital	COMMUN. WITH PCU-1 IGNORED
PCU-5\TAH_CAB_PLC5	Digital	PLC-5 CABINET HIGH TEMPERATURE [OFF = ALARM]
SECURITY	Analog	PRESENT SECURITY LEVEL

2.2.2 Graphics\Display\00error

HANFORD CROSS SITE TRANSFER SYSTEM

IF THIS SCREEN REMAINS FOR LONGER THAN ONE MINUTE THERE WAS AN ERROR LOADING THIS STATION OF THE CROSS SITE TRANSFER SYSTEM OPERATOR INTERFACE SYSTEM

PLEASE REBOOT THE COMPUTERS AND TRY AGAIN

SHUT DOWN OIT & PC

IF THE PROBLEM PERSISTS PLEASE CONTACT SST ENGINEERING

SSSSSSSSSSSSSSSSSSSS

2.2.2.1 Display Settings

Section	Option	Selection
Properties	Display Type	Replace
	Allow Multiple Running Copies	No
	Cache after Displaying	No
	Title Bar	Yes "HANFORD CROSS SITE TRANSFER SYSTEM"
	System Menu	No
	Minimize Button	No
	Maximize Button	No
	Size to Main Window at Runtime	No
	Show last Acquired Value	Yes
	Use Current Size	No (Size in Pixels: 400 x 300)
	Allow Display to be Resized	No
	Use Current Position	No (Position in Pixels: 0 x 0)
	Security Code	*
	Background Color	0xC0C0C0
Behavior	Startup Command	
	Shutdown Command	
	Input Field Not Selected Text Color	0x0
	Input Field Not Selected Fill Color	0xFFFFFF
	Input Field Selected Text Color	0xFFFFFF
	Input Field Selected Fill Color	0x8000
	Beep on Press of Interactive Object	No
	Highlight when Cursor Passes Over Interactive Objects	Yes Highlight Color: 0x0
	Highlight Color of Objects with Input Focus	0x808080
	Display On-screen Keyboard	No

2.2.2.2 Animated Display Objects

Object Name	Grouping	X	Y	Property	Expression
Group90	++Group90	155	179		
Group90	|	155	179	Group: Touch Control: Press Action	Login NPO Operator; Quit /r
Group90	+-Group90				
StringDisplay2		109	272	String Display	COMPUTER_NAME

2.2.2.3 Database Tags Used by the Component

Tag Name	Tag Type	Tag Description
COMPUTER_NAME	String	COMPUTER NAME READ FROM THE RSVIEW OBJECT MODEL

2.2.3 Graphics\Display\00mode

HANFORD CROSS SITE TRANSFER SYSTEM - WELCOME AND TRANSFER MODE SELECTION SCREEN

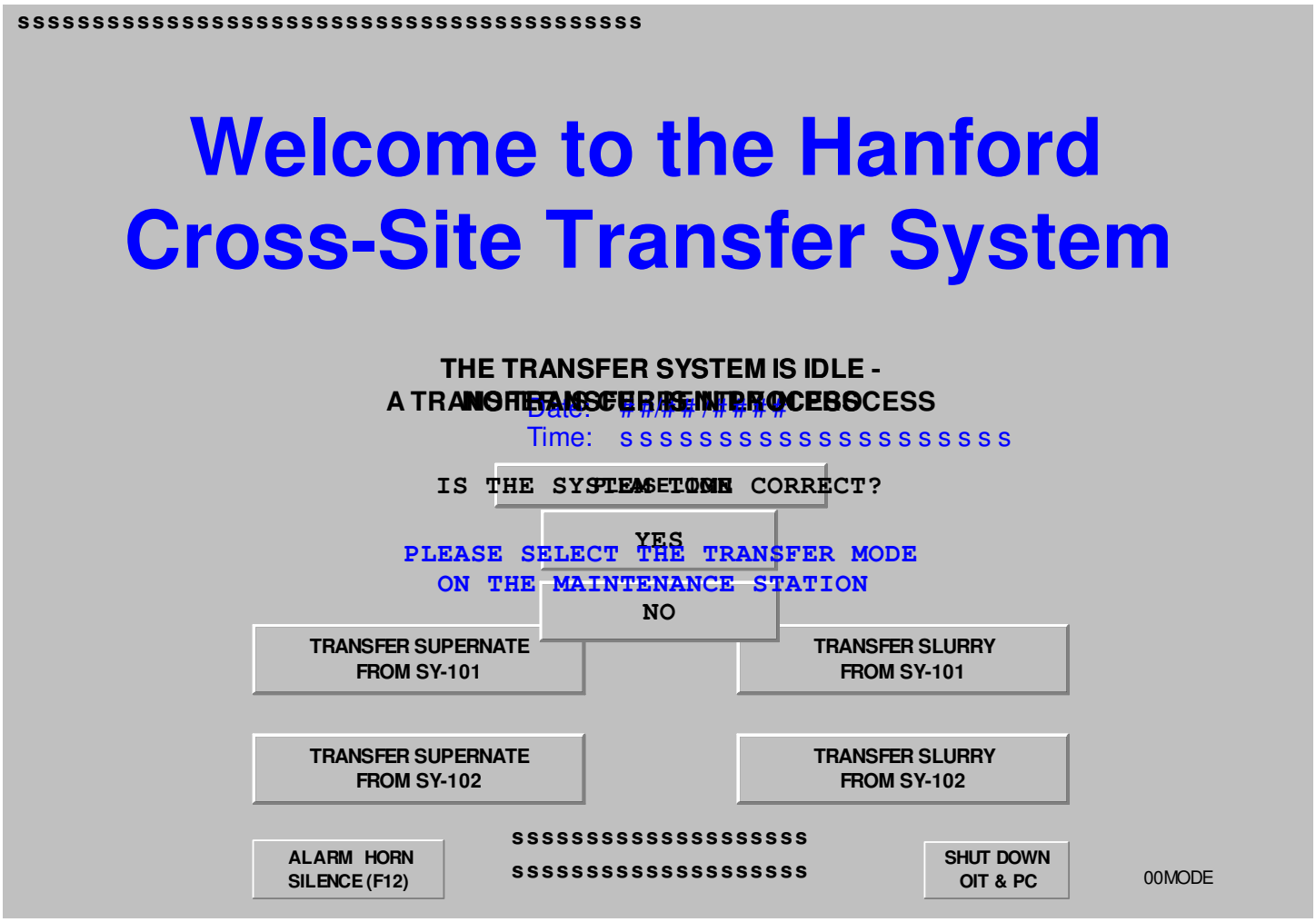

2.2.3.1 Display Settings

Section	Option	Selection
Properties	Display Type	Replace
	Allow Multiple Running Copies	No
	Cache after Displaying	No
	Title Bar	Yes "HANFORD CROSS SITE TRANSFER SYSTEM - WELCOME AND TRANSFER MODE SELECTION SCREEN"
	System Menu	No
	Minimize Button	No
	Maximize Button	No
	Size to Main Window at Runtime	Yes
	Show last Acquired Value	Yes
	Use Current Size	No (Size in Pixels: 790 x 551)
	Allow Display to be Resized	No
	Use Current Position	No (Position in Pixels: 0 x 0)
	Security Code	*
	Background Color	0xC0C0C0
Behavior	Startup Command	SCREEN_NUMBER = 0
	Shutdown Command	
	Input Field Not Selected Text Color	0x0
	Input Field Not Selected Fill Color	0xFFFFFF
	Input Field Selected Text Color	0xFFFFFF
	Input Field Selected Fill Color	0x8000
	Beep on Press of Interactive Object	No
	Highlight when Cursor Passes Over Interactive Objects	Yes Highlight Color: 0x0
	Highlight Color of Objects with Input Focus	0x808080
	Display On-screen Keyboard	No

2.2.3.2 Animated Display Objects

Object Name	Grouping	X	Y	Property	Expression
StringDisplay1		9	2	String Display String Display: Visibility Control	system\DateAndTimeString 0
Group4	++Group4	151	210		
Group4	|	151	210	Group: Visibility Control	{PCU-3\D_OVR_REQ_M}
Group2	| ++Group2	231	230		
Group2	| |	231	230	Group: Visibility Control	{PCU-3\TR_ON_1002A} OR {PCU-3\TR_ON_1002B} OR {PCU-3\TR_ON_1001} OR {PCU-3\TR_ON_1003}
Button1	| |	297	277	Button: "ACCEPT ACTIVE MODE": Touch Control: Release Action	Display 01overvw
Group2	| +-Group2				
Group1	| ++Group1	151	210		
Group1	| |	151	210	Group: Visibility Control	{PCU-3\TR_ON_1002A} OR {PCU-3\TR_ON_1002B} OR {PCU-3\TR_ON_1001} OR {PCU-3\TR_ON_1003}
Group3	| | ++Group3	151	277		
Group3	| | |	151	277	Group: Visibility Control	MAINTENANCE_STATION AND (SECURITY >= 1)
Button2	| | |	297	277	Button: "CLEAR SELECTED MODE": Touch Control: Release Action	&Set PCU-3\HS_MD_CLEAR 1
	| | |			Button: "CLEAR SELECTED MODE": Visibility Control	{PCU-3\MD_SL_101} OR {PCU-3\MD_SL_102} OR {PCU-3\MD_SU_101} OR {PCU-3\MD_SU_102}
Group95	| | | ++Group95	151	374		
Group95	| | | |	151	374	Group: Visibility Control	{PCU-3\MD_SL_101} OR {PCU-3\MD_SL_102} OR {PCU-3\MD_SU_101} OR {PCU-3\MD_SU_102}
Button3	| | | |	151	374	Button: "TRANSFER SUPERNATE FROM SY-101": Touch Control: Release Action	&Set PCU-3\HS_MD_SU_101 1
Button4	| | | |	151	440	Button: "TRANSFER SUPERNATE FROM SY-102": Touch Control: Release Action	&Set PCU-3\HS_MD_SU_102 1
Button6	| | | |	443	374	Button: "TRANSFER SLURRY FROM SY-101": Touch Control: Release Action	&Set PCU-3\HS_MD_SL_101 1
Button7	| | | |	443	440	Button: "TRANSFER SLURRY FROM SY-102": Touch Control: Release Action	&Set PCU-3\HS_MD_SL_102 1
Group95	| | | +-Group95				
Group3	| | +-Group3				
Button9	| | | |	297	277	Button: "PLEASE LOGIN": Visibility Control Button: "PLEASE LOGIN": Touch Control: Press Action	MAINTENANCE_STATION AND (SECURITY < 1) Login
Group1	| +-Group1				
Group4	+-Group4				
Group5	++Group5	261	234		
Group5	|	261	234	Group: Visibility Control	{PCU-3\D_OVR_REQ_M} AND MAINTENANCE_STATION
Group98	| ++Group98	316	234		
StringDisplay2	| |	372	252	String Display	system\Time
Group97	| | ++Group97	372	234		
NumericDisplay8	| | |	372	234	Numeric Display	system\Month
NumericDisplay23	| | |	397	234	Numeric Display	system\DayOfMonth
NumericDisplay24	| | |	428	234	Numeric Display	system\Year
Group97	| | +-Group97				
Group98	| +-Group98				
Button5	|	325	305	Button: "YES": Touch Control: Press Action	AppStart SyncTAD /s; Pause 1; Display 01OVERVW; PCU-3\D_OVR_STAT_M = 1
Button8	|	324	348	Button: "NO": Touch Control: Press Action	AppStart SyncTAD
Group5	+-Group5				
Group6	++Group6	242	210		
Group6	|	242	210	Group: Visibility Control	MAINTENANCE_STATION OR {PCU-3\TR_ON_1002A} OR {PCU-3\TR_ON_1002B} OR {PCU-3\TR_ON_1001} OR {PCU-3\TR_ON_1003}
Group6	+-Group6				
Group90	++Group90	556	505		
Group90	|	556	505	Group: Touch Control: Press Action	Login NPO Operator; Quit /r
Group90	+-Group90				
Group39	++Group39	151	504		
Group39	| |	151	504	Group: Visibility Control Group: Touch Control: Press Action	MAINTENANCE_STATION == 0 SilenceAll
Group39	+-Group39				
StringDisplay3		307	514	String Display	COMPUTER_NAME
StringDisplay4		307	494	String Display	If MAINTENANCE_STATION Then "MAINTENANCE" Else "OPERATIONS"
Display Commands		x	x	Startup Command Shutdown Command	SCREEN_NUMBER = 0

2.2.3.3 Database Tags Used by the Component

Tag Name	Tag Type	Tag Description
COMPUTER_NAME	String	COMPUTER NAME READ FROM THE RSVIEW OBJECT MODEL
MAINTENANCE_STATION	Digital	OIT STATION SELECTION - TRUE=MAINTENANCE, FALSE=OPERATOR
PCU-3\D_OVR_REQ_M	Digital	DISPLAY OVERVIEW SCREEN ON MAINTENANCE REQUEST
PCU-3\D_OVR_STAT_M	Digital	DISPLAY OVERVIEW SCREEN ON MAINTENANCE
PCU-3\HS_MD_CLEAR	Digital	TRANSFER MODE SELECT ENABLE
PCU-3\HS_MD_SL_101	Digital	SLURRY MODE TRANSFER FROM SY101 SELECT
PCU-3\HS_MD_SL_102	Digital	SLURRY MODE TRANSFER FROM SY102 SELECT
PCU-3\HS_MD_SU_101	Digital	SUPERNATE MODE TRANSFER FROM SY101 SELECT
PCU-3\HS_MD_SU_102	Digital	SUPERNATE MODE TRANSFER SELECT FROM SY102 SELECT
PCU-3\MD_SL_101	Digital	SLURRY MODE TRANSFER FROM SY101 SELECTED

Tag Name	Tag Type	Tag Description
PCU-3\MD_SL_102	Digital	SLURRY MODE TRANSFER FROM SY102 SELECTED
PCU-3\MD_SU_101	Digital	SUPERNATE MOVE TRANSFER FROM SY101 SELECTED
PCU-3\MD_SU_102	Digital	SUPERNATE MODE TRANSFER FROM SY102 SELECTED
PCU-3\TR_ON_1001	Digital	TRANSFER 1 INITIATED Y-41.1
PCU-3\TR_ON_1002A	Digital	TRANSFER 2A INITIATED Y-42.1
PCU-3\TR_ON_1002B	Digital	TRANSFER 2B INITIATED Y-43.1
PCU-3\TR_ON_1003	Digital	TRANSFER 3 INITIATED Y-44.1
SCREEN_NUMBER	Analog	CURRENT SCREEN NUMBER (1 TO 12)
SECURITY	Analog	PRESENT SECURITY LEVEL
system\DateAndTimeString	String	System date and time string
system\DayOfMonth	Analog	Day of Month
system\Month	Analog	Month
system\Time	String	System time string
system\Year	Analog	Year

2.2.4 Graphics\Display\01overvw

HANFORD CROSS SITE TRANSFER SYSTEM - SYSTEM OVERVIEW DIAGRAM

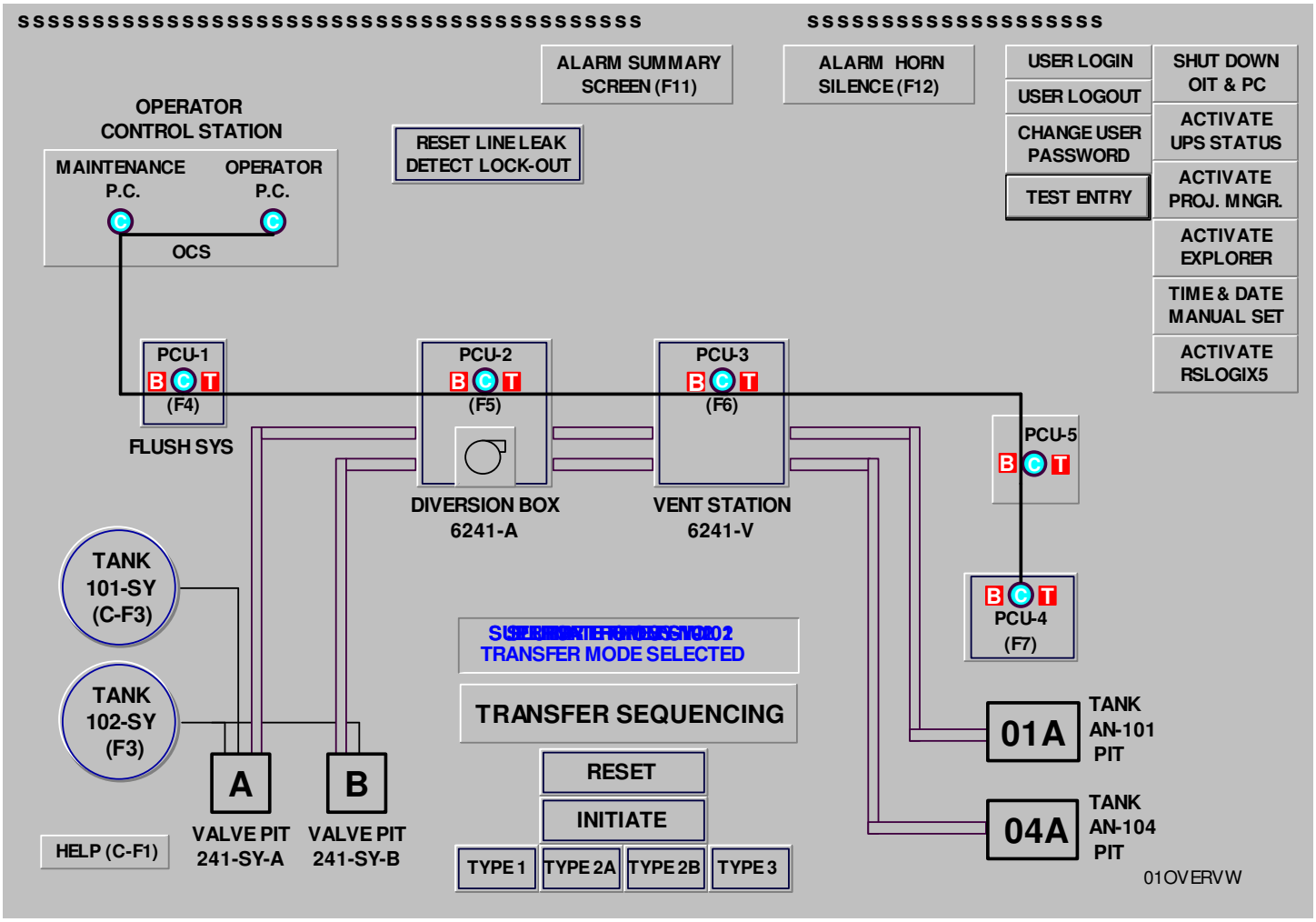

2.2.4.1 Display Settings

Section	Option	Selection
Properties	Display Type	Replace
	Allow Multiple Running Copies	No
	Cache after Displaying	Yes
	Title Bar	Yes "HANFORD CROSS SITE TRANSFER SYSTEM - SYSTEM OVERVIEW DIAGRAM"
	System Menu	No
	Minimize Button	No
	Maximize Button	No
	Size to Main Window at Runtime	Yes
	Show last Acquired Value	Yes
	Use Current Size	No (Size in Pixels: 790 x 551)
	Allow Display to be Resized	No
	Use Current Position	No (Position in Pixels: 0 x 0)
	Security Code	*
	Background Color	0xC0C0C0
Behavior	Startup Command	SCREEN_NUMBER = 1; PB_INDICATOR = 0
	Shutdown Command	ProjectHide
	Input Field Not Selected Text Color	0x0
	Input Field Not Selected Fill Color	0xFFFFFF
	Input Field Selected Text Color	0xFFFFFF
	Input Field Selected Fill Color	0x8000
	Beep on Press of Interactive Object	No
	Highlight when Cursor Passes Over Interactive Objects	Yes Highlight Color: 0x0
	Highlight Color of Objects with Input Focus	0x808080
	Display On-screen Keyboard	No

2.2.4.2 Animated Display Objects

Object Name	Grouping	X	Y	Property	Expression
Rectangle		201	274	Rectangle: Color Control	{PCU-3\TR_ON_1002A} OR {PCU-3\TR_ON_1002B}
Rectangle		150	255	Rectangle: Color Control	{PCU-3\TR_ON_1001} OR {PCU-3\TR_ON_1003}
Group37	++Group37	325	25		
Group37	|	325	25	Group: Touch Control: Press Action	Display 03almsmc
	|			Group: Visibility Control	SECURITY >= 1
Group37	+-Group37				
Group39	++Group39	471	25		
Group39	|	471	25	Group: Visibility Control	MAINTENANCE_STATION == 0
	|			Group: Touch Control: Press Action	SilenceAll
Group39	+-Group39				
Rectangle		156	255	Rectangle: Color Control	{PCU-3\TR_ON_1001} OR {PCU-3\TR_ON_1003}
Rectangle		332	255	Rectangle: Color Control	{PCU-3\TR_ON_1001} OR {PCU-3\TR_ON_1003}
Rectangle		207	274	Rectangle: Color Control	{PCU-3\TR_ON_1002A} OR {PCU-3\TR_ON_1002B}
Rectangle		332	274	Rectangle: Color Control	{PCU-3\TR_ON_1002A} OR {PCU-3\TR_ON_1002B}
Rectangle		475	255	Rectangle: Color Control	{PCU-3\TR_ON_1001} OR {PCU-3\TR_ON_1003}
Rectangle		475	274	Rectangle: Color Control	{PCU-3\TR_ON_1002A} OR {PCU-3\TR_ON_1002B}
Rectangle		547	255	Rectangle: Color Control	{PCU-3\TR_ON_1001} OR {PCU-3\TR_ON_1003}
Rectangle		522	274	Rectangle: Color Control	{PCU-3\TR_ON_1002A} OR {PCU-3\TR_ON_1002B}
Rectangle		547	437	Rectangle: Color Control	{PCU-3\TR_ON_1001} OR {PCU-3\TR_ON_1003}
Rectangle		522	493	Rectangle: Color Control	{PCU-3\TR_ON_1002A} OR {PCU-3\TR_ON_1002B}
Ellipse		614	269	Elipse: Color Control	{PCU-1\COM-15} OR {PCU-2\COM-25} OR {PCU-3\COM-35} OR {PCU-4\COM-45}
Group34	++Group34	601	269		
Group34	|	601	269	Group: Visibility Control	{PCU-5\BATT_BAD_PLC5}
Rectangle	|	601	271	Rectangle: Color Control	{PCU-5\BATT_BAD_PLC5}
Group34	+-Group34				
Group35	++Group35	633	270		
Group35	|	633	270	Group: Visibility Control	alm_in_alarm({PCU-5\TAH_CAB_PLC5})
Rectangle	|	633	272	Rectangle: Color Control	1
Group35	+-Group35				
Text101		618	271	Text: "C": Visibility Control	{PCU-1\COM-15} OR {PCU-2\COM-25} OR {PCU-3\COM-35} OR {PCU-4\COM-45}
Group53	++Group53	23	501		
Group53	|	23	501	Group: Touch Control: Press Action	Display 02help
Group53	+-Group53				
Group55	++Group55	83	202		
Group55	|	83	202	Group: Touch Control: Press Action	Display 13flush
Group54	| ++Group54	83	202		
Group54	| |	83	202	Group: Touch Control: Release Action	ABORT DISPLAY 11SYTANK
Group54	| +-Group54				
Rectangle	|	85	204	Rectangle: Color Control	{PCU-1\FAL-P3100A} OR {PCU-1\LAL-3102}
Ellipse	|	101	219	Elipse: Color Control	{PCU-2\COM-21} OR {PCU-3\COM-31} OR {PCU-4\COM-41} OR {PCU-5\COM-51}
Group20	| ++Group20	120	220		
Group20	| |	120	220	Group: Visibility Control	alm_in_alarm({PCU-1\TAH_CAB_PLC1})
Rectangle	| |	120	222	Rectangle: Color Control	1
Group20	| +-Group20				
Text63	|	105	221	Text: "C": Visibility Control	{PCU-2\COM-21} OR {PCU-3\COM-31} OR {PCU-4\COM-41} OR {PCU-5\COM-51}
Group21	| ++Group21	88	220		
Group21	| |	88	220	Group: Visibility Control	{PCU-1\BATT_BAD_PLC1}
Rectangle	| |	88	222	Rectangle: Color Control	{PCU-1\BATT_BAD_PLC1}
Group21	| +-Group21				
Group55	+-Group55				
Group56	++Group56	70	137		
Group56	|	70	137	Group: Color Control	{PCU-1\COM-1_OCS} OR {PCU-1\COM-OCS_1}
Group56	+-Group56				
Group60	++Group60	393	202		
Group60	|	393	202	Group: Touch Control: Press Action	Display 09ventsn
Group59	| ++Group59	393	202		
Group59	| |	393	202	Group: Touch Control: Release Action	ABORT DISPLAY 04DIVBOX
Group59	| +-Group59				
Rectangle	|	396	204	Rectangle: Color Control	{PCU-3\ZA-VALVES} OR {PCU-3\PAL-3100B} OR NOT {PCU-3\LDA-3161} OR {PCU-3\LDA-3151}
Ellipse	|	426	219	Elipse: Color Control	{PCU-1\COM-13} OR {PCU-2\COM-23} OR {PCU-4\COM-43} OR {PCU-5\COM-53}
Group30	| ++Group30	413	220		
Group30	| |	413	220	Group: Visibility Control	{PCU-3\BATT_BAD_PLC3}
Rectangle	| |	413	222	Rectangle: Color Control	{PCU-3\BATT_BAD_PLC3}
Group30	| +-Group30				
Text94	|	430	221	Text: "C": Visibility Control	{PCU-1\COM-13} OR {PCU-2\COM-23} OR {PCU-4\COM-43} OR {PCU-5\COM-53}
Group31	| ++Group31	445	220		
Group31	| |	445	220	Group: Visibility Control	alm_in_alarm({PCU-3\TAH_CAB_PLC3})
Rectangle	| |	445	222	Rectangle: Color Control	1
Group31	| +-Group31				
Group60	+-Group60				
Group61	++Group61	432	234		
Group61	|	432	234	Group: Color Control	{PCU-3\COM-35} OR {PCU-5\COM-53}
Group61	+-Group61				
Group66	++Group66	250	202		
Group66	|	250	202	Group: Touch Control: Press Action	Display 04divbox
Group62	| ++Group62	250	202		
Group62	| |	250	202	Group: Touch Control: Release Action	ABORT DISPLAY 04DIVBOX

Object Name	Grouping	X	Y	Property	Expression
Group62	| +-Group62				
Rectangle	|	253	204	Rectangle: Color Control	{PCU-2\ZA-VALVES} OR {PCU-2\ZA-PUMPS} OR {PCU-2\PAL-3100A} OR NOT {PCU-2\LDA-3160} OR {PCU-2\LDA-3150}
Group65	| ++Group65	273	255		
Group63	| | ++Group63	273	255		
Group63	| | |	273	255	Group: Touch Control: Release Action	ABORT DISPLAY 11SYTANK
Group63	| | +-Group63				
Group65	| +-Group65				
Ellipse	|	283	219	Elipse: Color Control	{PCU-1\COM-12} OR {PCU-3\COM-32} OR {PCU-4\COM-42} OR {PCU-5\COM-52}
Group24	| ++Group24	270	220		
Group24	| |	270	220	Group: Visibility Control	{PCU-2\BATT_BAD_PLC2}
Rectangle	| |	270	222	Rectangle: Color Control	{PCU-2\BATT_BAD_PLC2}
Group24	| +-Group24				
Text91	|	287	221	Text: "C": Visibility Control	{PCU-1\COM-12} OR {PCU-3\COM-32} OR {PCU-4\COM-42} OR {PCU-5\COM-52}
Group25	| ++Group25	302	220		
Group25	| |	302	220	Group: Visibility Control	alm_in_alarm({PCU-2\TAH_CAB_PLC2})
Rectangle	| |	302	222	Rectangle: Color Control	1
Group25	| +-Group25				
Group66	+-Group66				
Line		288	234	Line: Color Control	{PCU-2\COM-23} OR {PCU-3\COM-32}
Line		107	234	Line: Color Control	{PCU-1\COM-12} OR {PCU-2\COM-21}
StringDisplay1		9	2	String Display	system\DateAndTimeString
Group74	++Group74	325	25		
Group74	|	325	25	Group: Touch Control: Press Action	Display 03almsmv
	|			Group: Visibility Control	SECURITY >= 1
Group74	+-Group74				
Group80	++Group80	235	73		
Rectangle	|	237	75	Rectangle: Color Control	If {PCU-3\LDA-TR-LINE} Then 2 Else 0
Group80	+-Group80				
Group82	++Group82	235	73		
Group82	|	235	73	Group: Visibility Control	(SECURITY >= 1) AND {PCU-3\LDA-TR-LINE}
	|			Group: Touch Control: Press Action	PB_INDICATOR = 7 DISPLAY PB_ACK /U /TPCU-3\HS-1010B /CL
Rectangle	|	237	75	Rectangle: Color Control	If PB_INDICATOR == 7 Then 1 Else If {PCU-3\LDA-TR-LINE} Then 2 Else 0
Group82	+-Group82				
Ellipse		63	123	Elipse: Color Control	{PCU-1\COM-1_OCS} OR {PCU-1\COM-OCS_1} OR (({PCU-2\COM-2_OCS} OR {PCU-2\COM-OCS_2}) AND ({PCU-3\COM-3_OCS} OR {PCU-3\COM-OCS_3}) AND ({PCU-4\COM-4_OCS} OR {PCU-4\COM-OCS_4}) AND ({PCU-5\COM-5_OCS} OR {PCU-5\COM-OCS_5}))
Ellipse		155	123	Elipse: Color Control	{PCU-1\COM-1_OCS} OR {PCU-1\COM-OCS_1} OR (({PCU-2\COM-2_OCS} OR {PCU-2\COM-OCS_2}) AND ({PCU-3\COM-3_OCS} OR {PCU-3\COM-OCS_3}) AND ({PCU-4\COM-4_OCS} OR {PCU-4\COM-OCS_4}) AND ({PCU-5\COM-5_OCS} OR {PCU-5\COM-OCS_5}))
Group88	++Group88	34	396		
Group88	|	34	396	Group: Touch Control: Press Action	Display 12sy102
Ellipse	|	36	398	Elipse: Color Control	{PCU-1\LAL-3102} OR alm_in_alarm({pcu-1\XA-058W})
Group88	+-Group88				
Group97	++Group97	605	25		
Group46	| ++Group46	605	25		
Group41	| | ++Group41	605	67		
Group41	| | |	605	67	Group: Visibility Control	SECURITY >= 1
	| | |			Group: Touch Control: Press Action	PASSWORD
Group41	| | +-Group41				
Group43	| | ++Group43	605	25		
Group43	| | |	605	25	Group: Touch Control: Press Action	LOGIN
Group43	| | +-Group43				
Group45	| | ++Group45	605	46		
Group45	| | |	605	46	Group: Touch Control: Press Action	LOGOUT
Group45	| | +-Group45				
Group46	| +-Group46				
Group86	| ++Group86	694	60		
Group86	| |	694	60	Group: Visibility Control	0
	| |			Group: Touch Control: Press Action	VbaExec Launch_PwrMon; AppActivate "UPS Status"
Group86	| +-Group86				
Group90	| ++Group90	694	25		
Group90	| |	694	25	Group: Visibility Control	(SECURITY >= 1)
	| |			Group: Touch Control: Press Action	Quit /r
Group90	| +-Group90				
Group6	| ++Group6	694	200		
Group6	| |	694	200	Group: Visibility Control	MAINTENANCE_STATION == 1
Group6	| +-Group6				
Group2	| ++Group2	694	165		
Group2	| |	694	165	Group: Visibility Control	MAINTENANCE_STATION == 1
Group2	| +-Group2				
Group68	| ++Group68	694	165		
Group68	| |	694	165	Group: Touch Control: Press Action	VbaExec Launch_SyncTAD AppActivate "Synchronize Time and Date"
	| |			Group: Visibility Control	(SECURITY >= 2) AND (MAINTENANCE_STATION == 1)
Group68	| +-Group68				

Object Name	Grouping	X	Y	Property	Expression
Group72	| ++Group72	694	200		
Group72	| |	694	200	Group: Touch Control: Press Action	VbaExec Launch_RSLogix5 AppActivate "RSLogix 5"
	| |			Group: Visibility Control	(SECURITY >= 3) AND (MAINTENANCE_STATION == 1)
Group72	| +-Group72				
Group70	| ++Group70	694	95		
Group70	| |	694	95	Group: Touch Control: Press Action	ProjectShow
	| |			Group: Visibility Control	SECURITY >= 3
Group70	| +-Group70				
Group94	| ++Group94	694	130		
Group94	| |	694	130	Group: Visibility Control	SECURITY >= 2
	| |			Group: Touch Control: Press Action	VbaExec Launch_ExplorerNT AppActivate Exploring
Group94	| +-Group94				
Group97	+-Group97				
Line		70	138	Line: Color Control	{PCU-1\COM-1_OCS} OR {PCU-1\COM-OCS_1}
Group96	++Group96	34	315		
Group96	|	34	315	Group: Touch Control: Press Action	Display 11sy101
Ellipse	|	36	317	Elipse: Color Control	{PCU-1\LAL-3101} OR alm_in_alarm({pcu-1\XA-058W}) OR alm_in_alarm({PCU-1\K-LA-365})
Group96	+-Group96				
Group130	++Group130	273	449		
Group104	| ++Group104	273	507		
Group99	| | ++Group99	273	507		
Rectangle	| | |	275	509	Rectangle: Color Control	If {PCU-3\TR_EN_1001} Then 2 Else 0
Group99	| | +-Group99				
Group103	| | ++Group103	273	507		
Group103	| | |	273	507	Group: Touch Control: Press Action	PB_INDICATOR = 3 DISPLAY PB_ACK /U /TPCU-3\HS-1001 /Q4
	| | |			Group: Visibility Control	SECURITY >= 1
Rectangle	| | |	275	509	Rectangle: Color Control	If PB_INDICATOR == 3 Then 1 Else If {PCU-3\TR_EN_1001} Then 2 Else 0
Group103	| | +-Group103				
Group104	| +-Group104				
Group109	| ++Group109	324	507		
Group106	| | ++Group106	324	507		
Rectangle	| | |	326	509	Rectangle: Color Control	If {PCU-3\TR_EN_1002A} Then 2 Else 0
Group106	| | +-Group106				
Group108	| | ++Group108	324	507		
Group108	| | |	324	507	Group: Touch Control: Press Action	PB_INDICATOR = 4 DISPLAY PB_ACK /U /TPCU-3\HS-1002A /Q4
	| | |			Group: Visibility Control	SECURITY >= 1
Rectangle	| | |	326	509	Rectangle: Color Control	If PB_INDICATOR == 4 Then 1 Else If {PCU-3\TR_EN_1002A} Then 2 Else 0
Group108	| | +-Group108				
Group109	| +-Group109				
Group114	| ++Group114	375	507		
Group111	| | ++Group111	375	507		
Rectangle	| | |	377	509	Rectangle: Color Control	If {PCU-3\TR_EN_1002B} Then 2 Else 0
Group111	| | +-Group111				
Group113	| | ++Group113	375	507		
Group113	| | |	375	507	Group: Touch Control: Press Action	PB_INDICATOR = 5 DISPLAY PB_ACK /U /TPCU-3\HS-1002B /Q4
	| | |			Group: Visibility Control	SECURITY >= 1
Rectangle	| | |	377	509	Rectangle: Color Control	If PB_INDICATOR == 5 Then 1 Else If {PCU-3\TR_EN_1002B} Then 2 Else 0
Group113	| | +-Group113				
Group114	| +-Group114				
Group119	| ++Group119	324	449		
Group118	| | ++Group118	324	449		
Group118	| | |	324	449	Group: Visibility Control	SECURITY >= 1
	| | |			Group: Touch Control: Press Action	PB_INDICATOR = 1 DISPLAY PB_ACK /U /TPCU-3\HS-1000B /Q4
Rectangle	| | |	326	451	Rectangle: Color Control	PB_INDICATOR == 1
Group118	| | +-Group118				
Group119	| +-Group119				
Group124	| ++Group124	324	478		
Group123	| | ++Group123	324	478		
Group123	| | |	324	478	Group: Touch Control: Press Action	PB_INDICATOR = 2 DISPLAY PB_ACK /U /TPCU-3\HS-1000A /Q4
	| | |			Group: Visibility Control	SECURITY >= 1
Rectangle	| | |	326	480	Rectangle: Color Control	PB_INDICATOR == 2
Group123	| | +-Group123				
Group124	| +-Group124				
Group129	| ++Group129	426	507		
Group126	| | ++Group126	426	507		
Rectangle	| | |	428	509	Rectangle: Color Control	If {PCU-3\TR_EN_1003} Then 2 Else 0
Group126	| | +-Group126				
Group128	| | ++Group128	426	507		

Object Name	Grouping	X	Y	Property	Expression
Group128	| | |	426	507	Group: Touch Control: Press Action	PB_INDICATOR = 6 DISPLAY PB_ACK /U /TPCU-3\HS-1003 /Q4
	| | |			Group: Visibility Control	SECURITY >= 1
Rectangle	| | |	428	509	Rectangle: Color Control	If PB_INDICATOR == 6 Then 1 Else If {PCU-3\TR_EN_1003} Then 2 Else 0
Group128	| | +-Group128				
Group129	| +-Group129				
Group130	+-Group130				
Text88		67	125	Text: "C": Visibility Control	{PCU-1\COM-1_OCS} OR {PCU-1\COM-OCS_1} OR (({PCU-2\COM-2_OCS} OR {PCU-2\COM-OCS_2}) AND ({PCU-3\COM-3_OCS} OR {PCU-3\COM-OCS_3}) AND ({PCU-4\COM-4_OCS} OR {PCU-4\COM-OCS_4}) AND ({PCU-5\COM-5_OCS} OR {PCU-5\COM-OCS_5}))
Text89		159	125	Text: "C": Visibility Control	{PCU-1\COM-1_OCS} OR {PCU-1\COM-OCS_1} OR (({PCU-2\COM-2_OCS} OR {PCU-2\COM-OCS_2}) AND ({PCU-3\COM-3_OCS} OR {PCU-3\COM-OCS_3}) AND ({PCU-4\COM-4_OCS} OR {PCU-4\COM-OCS_4}) AND ({PCU-5\COM-5_OCS} OR {PCU-5\COM-OCS_5}))
StringDisplay2		485	2	String Display String Display: Visibility Control	COMPUTER_NAME (COMPUTER_NAME <> "Maintenance") AND (COMPUTER_NAME <> "MAINTENANCE") AND (COMPUTER_NAME <> "Operations") AND (COMPUTER_NAME <> "OPERATIONS")
Button2		605	103	Button: "TEST ENTRY": Visibility Control Button: "TEST ENTRY": Touch Control: Press Action	0 Display 00Entry
Group10	++Group10	580	343		
Group10	|	580	343	Group: Touch Control: Press Action	Display 10liftsn
Group57	| ++Group57	580	343		
Group57	| |	580	343	Group: Touch Control: Release Action	ABORT DISPLAY 11SYTANK
Group57	| +-Group57				
Rectangle	|	584	345	Rectangle: Color Control	NOT {PCU-5\LDA-3162} OR NOT {PCU-4\LDA-3163} OR {pcu-4\XA-058E}
Ellipse	|	606	348	Elipse: Color Control	{PCU-1\COM-14} OR {PCU-2\COM-24} OR {PCU-3\COM-34} OR {PCU-5\COM-54}
Group32	| ++Group32	593	349		
Group32	| |	593	349	Group: Visibility Control	{PCU-4\BATT_BAD_PLC4}
Rectangle	| |	593	351	Rectangle: Color Control	{PCU-4\BATT_BAD_PLC4}
Group32	| +-Group32				
Text97	|	610	350	Text: "C": Visibility Control	{PCU-1\COM-14} OR {PCU-2\COM-24} OR {PCU-3\COM-34} OR {PCU-5\COM-54}
Group33	| ++Group33	625	349		
Group33	| |	625	349	Group: Visibility Control	alm_in_alarm({PCU-4\TAH_CAB_PLC4})
Rectangle	| |	625	351	Rectangle: Color Control	1
Group33	| +-Group33				
Group10	+-Group10				
Line		613	288	Line: Color Control	{PCU-5\COM-54} OR {PCU-4\COM-45}
Group14	++Group14	275	370		
Group11	| ++Group11	293	372		
Text13	| |	293	372	Text: "SUPERNATE FROM SY-101": Visibility Control	{PCU-3\MD_SU_101}
Text14	| |	304	372	Text: "SLURRY FROM SY-101": Visibility Control	{PCU-3\MD_SL_101}
Text16	| |	304	372	Text: "SLURRY FROM SY-102": Visibility Control	{PCU-3\MD_SL_102}
Text17	| |	293	372	Text: "SUPERNATE FROM SY-102": Visibility Control	{PCU-3\MD_SU_102}
Text18	| |	310	372	Text: "ERROR THERE IS NO": Visibility Control	{PCU-3\MD_SU_102} OR {PCU-3\MD_SU_101} OR {PCU-3\MD_SL_102} OR {PCU-3\MD_SL_101}
Group11	| +-Group11				
Group14	+-Group14				
Display Commands		x	x	Startup Command Shutdown Command	SCREEN_NUMBER = 1; PB_INDICATOR = 0 ProjectHide

2.2.4.3 Database Tags Used by the Component

Tag Name	Tag Type	Tag Description
COMPUTER_NAME	String	COMPUTER NAME READ FROM THE RSVIEW OBJECT MODEL
MAINTENANCE_STATION	Digital	OIT STATION SELECTION - TRUE=MAINTENANCE, FALSE=OPERATOR
PB_INDICATOR	Analog	VALUE INDICATING THE PUSHBUTTON BEING ACKNOWLEDGED
PCU-1\BATT_BAD_PLC1	Digital	PLC-1 BATTERY IS BAD OR MISSING
PCU-1\COM-1_OCS	Digital	COMMUN. WITH OCS IGNORED
PCU-1\COM-12	Digital	COMMUN. WITH PCU-2 IGNORED
PCU-1\COM-13	Digital	COMMUN. WITH PCU-3 IGNORED
PCU-1\COM-14	Digital	COMMUN. WITH PCU-4 IGNORED
PCU-1\COM-15	Digital	COMMUN. WITH PCU-5 IGNORED
PCU-1\COM-OCS_1	Digital	COMMUN. WITH PCU-1 IGNORED - DETECTED AT OCS
PCU-1\FAL-P3100A	Digital	FLUSH PUMP P-3100A LOW FLOW Y-90.1
PCU-1\LAL-3101	Digital	TANK 241-SY-101 LOW LEVEL
PCU-1\LAL-3102	Digital	TANK 241-SY-102 LOW LEVEL
PCU-2\BATT_BAD_PLC2	Digital	PLC-2 BATTERY IS BAD OR MISSING
PCU-2\COM-2_OCS	Digital	COMMUN. WITH OCS IGNORED
PCU-2\COM-21	Digital	COMMUN. WITH PCU-1 IGNORED
PCU-2\COM-23	Digital	COMMUN. WITH PCU-3 IGNORED
PCU-2\COM-24	Digital	COMMUN. WITH PCU-4 IGNORED
PCU-2\COM-25	Digital	COMMUN. WITH PCU-5 IGNORED
PCU-2\COM-OCS_2	Digital	COMMUN. WITH PCU-2 IGNORED - DETECTED AT OCS
PCU-2\LDA-3150	Digital	LEAK DETECTED AT DIVERSION BOX 6241-A SUMP Y-72.1
PCU-2\LDA-3160	Digital	6241-A ENCASEMENT LEAK DETECTION [OFF = ALARM] Y72
PCU-2\PAL-3100A	Digital	LOW COMPRESSOR SA-CMP-3101A PRESSURE
PCU-2\ZA-PUMPS	Digital	PCU-2 PUMP FAILURE FOR OVERVIEW SCREEN INDICATION

Tag Name	Tag Type	Tag Description
PCU-2\ZA-VALVES	Digital	PCU-2 VALVE FAILURE FOR OVERVIEW SCREEN INDICATION
PCU-3\BATT_BAD_PLC3	Digital	PLC-3 BATTERY IS BAD OR MISSING
PCU-3\COM-3_OCS	Digital	COMMUNICATION WITH OCS IGNORED
PCU-3\COM-31	Digital	COMMUN. WITH PCU-1 IGNORED
PCU-3\COM-32	Digital	COMMUN. WITH PCU-2 IGNORED
PCU-3\COM-34	Digital	COMMUN. WITH PCU-4 IGNORED
PCU-3\COM-35	Digital	COMMUN. WITH PCU-5 IGNORED
PCU-3\COM-OCS_3	Digital	COMMUN. WITH PCU-3 IGNORED - DETECTED AT OCS
PCU-3\LDA-3151	Digital	LEAK DETECTED AT VENT STATION 6241-V SUMP Y-72.1
PCU-3\LDA-3161	Digital	6241-V ENCASEMENT LEAK DETECTION [OFF = ALARM] Y72
PCU-3\LDA-TR-LINE	Digital	TRANSFER LINE LEAK DETECTED Y-72.1 (COMBINED ALARM)
PCU-3\MD_SL_101	Digital	SLURRY MODE TRANSFER FROM SY101 SELECTED
PCU-3\MD_SL_102	Digital	SLURRY MODE TRANSFER FROM SY102 SELECTED
PCU-3\MD_SU_101	Digital	SUPERNATE MOVE TRANSFER FROM SY101 SELECTED
PCU-3\MD_SU_102	Digital	SUPERNATE MODE TRANSFER FROM SY102 SELECTED
PCU-3\PAL-3100B	Digital	LOW COMPRESSOR SA-CMP-3101B PRESSURE
PCU-3\TR_EN_1001	Digital	ENABLE TRANSFER 1 241-SY-A TO 241-A-B Y-70.1
PCU-3\TR_EN_1002A	Digital	ENABLE TRANSFER 2A 241-SY-B TO 241-A-A Y-70.1
PCU-3\TR_EN_1002B	Digital	ENABLE TRANSFER 2B 241-SY-B TO 241-A-A Y-70.1
PCU-3\TR_EN_1003	Digital	ENABLE TRANSFER 3 241-A-B TO 241-SY-A Y-70.1
PCU-3\TR_ON_1001	Digital	TRANSFER 1 INITIATED Y-41.1
PCU-3\TR_ON_1002A	Digital	TRANSFER 2A INITIATED Y-42.1
PCU-3\TR_ON_1002B	Digital	TRANSFER 2B INITIATED Y-43.1
PCU-3\TR_ON_1003	Digital	TRANSFER 3 INITIATED Y-44.1
PCU-3\ZA-VALVES	Digital	PCU-3 VALVE FAILURE FOR OVERVIEW SCREEN INDICATION
PCU-4\BATT_BAD_PLC4	Digital	PLC-4 BATTERY IS BAD OR MISSING
PCU-4\COM-4_OCS	Digital	COMMUN. WITH OCS IGNORED
PCU-4\COM-41	Digital	COMMUN. WITH PCU-1 IGNORED
PCU-4\COM-42	Digital	COMMUN. WITH PCU-2 IGNORED
PCU-4\COM-43	Digital	COMMUN. WITH PCU-3 IGNORED
PCU-4\COM-45	Digital	COMMUN. WITH PCU-5 IGNORED
PCU-4\COM-OCS_4	Digital	COMMUN. WITH PCU-4 IGNORED - DETECTED AT OCS
PCU-4\LDA-3163	Digital	244-A TO AN ENC. LEAK DETECTION [OFF = ALARM]
pcu-4\XA-058E	Digital	200-E MASTER SHUTDOWN CIRCUIT ACTIVATED Y-77.1
PCU-5\BATT_BAD_PLC5	Digital	PLC-5 BATTERY IS BAD OR MISSING
PCU-5\COM-5_OCS	Digital	COMMUN. WITH OCS IGNORED
PCU-5\COM-51	Digital	COMMUN. WITH PCU-1 IGNORED
PCU-5\COM-52	Digital	COMMUN. WITH PCU-2 IGNORED
PCU-5\COM-53	Digital	COMMUN. WITH PCU-3 IGNORED
PCU-5\COM-54	Digital	COMMUN. WITH PCU-4 IGNORED
PCU-5\COM-OCS_5	Digital	COMMUN. WITH PCU-5 IGNORED - DETECTED AT OCS
PCU-5\LDA-3162	Digital	244-A ENCASEMENT LEAK DETECTION [OFF = ALARM] Y72
SCREEN_NUMBER	Analog	CURRENT SCREEN NUMBER (1 TO 12)
SECURITY	Analog	PRESENT SECURITY LEVEL
system\DateAndTimeString	String	System date and time string

2.2.5 Graphics\Display\02help

HANFORD CROSS SITE TRANSFER SYSTEM - HELP PAGE

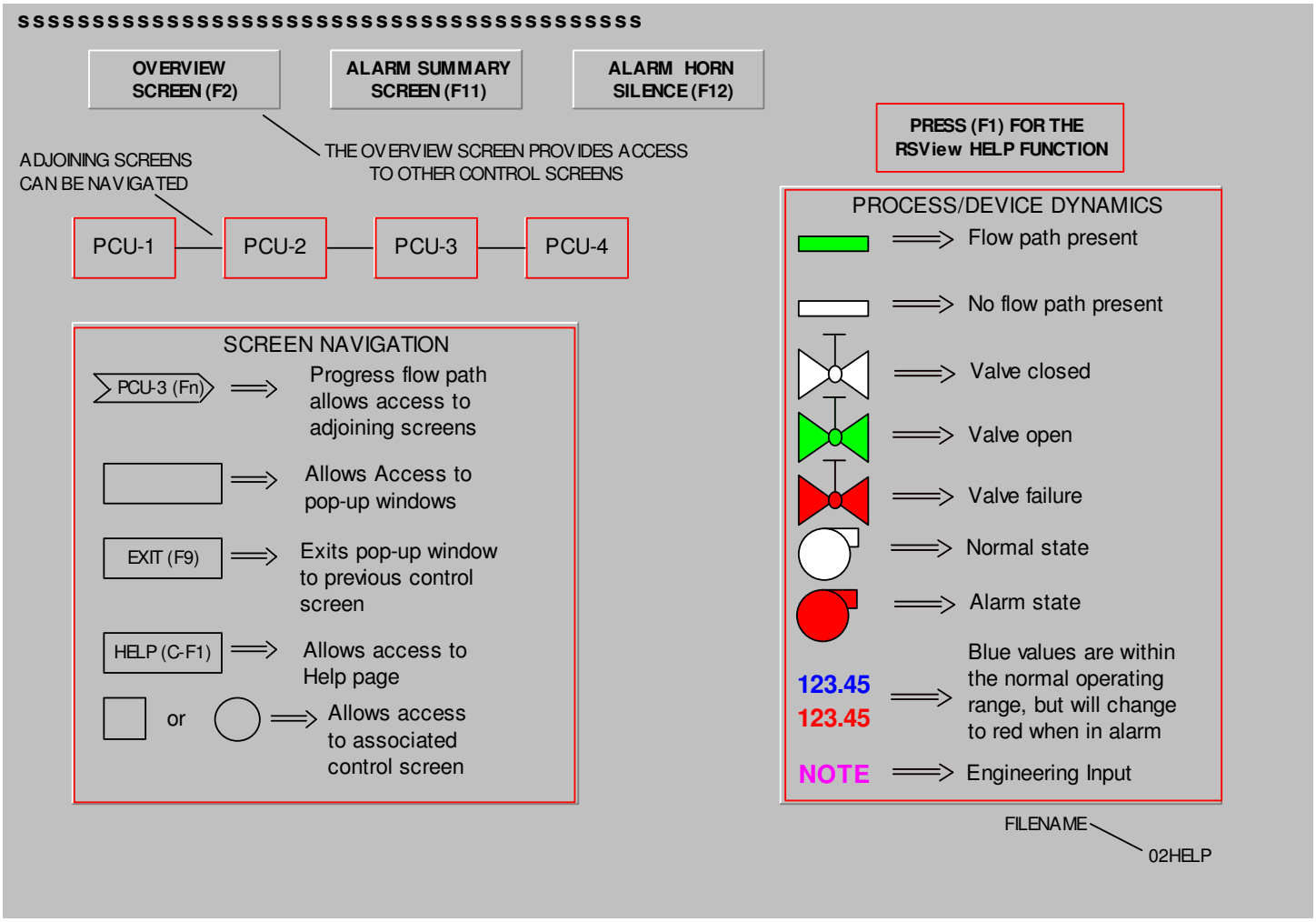

2.2.5.1 Display Settings

Section	Option	Selection
Properties	Display Type	Replace
	Allow Multiple Running Copies	No
	Cache after Displaying	Yes
	Title Bar	Yes "HANFORD CROSS SITE TRANSFER SYSTEM - HELP PAGE"
	System Menu	No
	Minimize Button	No
	Maximize Button	No
	Size to Main Window at Runtime	Yes
	Show last Acquired Value	Yes
	Use Current Size	No (Size in Pixels: 790 x 551)
	Allow Display to be Resized	No
	Use Current Position	No (Position in Pixels: 0 x 0)
	Security Code	*
	Background Color	0xC0C0C0
Behavior	Startup Command	SCREEN_NUMBER = 2
	Shutdown Command	
	Input Field Not Selected Text Color	0x0
	Input Field Not Selected Fill Color	0xFFFFFF
	Input Field Selected Text Color	0xFFFFFF
	Input Field Selected Fill Color	0x8000
	Beep on Press of Interactive Object	No
	Highlight when Cursor Passes Over Interactive Objects	Yes Highlight Color: 0x0
	Highlight Color of Objects with Input Focus	0x808080
	Display On-screen Keyboard	No

2.2.5.2 Animated Display Objects

Object Name	Grouping	X	Y	Property	Expression
Group2	++Group2	344	28		
Group2	|	344	28	Group: Visibility Control	MAINTENANCE_STATION == 0
	|			Group: Touch Control: Press Action	SilenceAll
Group2	+-Group2				
Group11	++Group11	42	129		
Group4	| ++Group4	42	129		
Rectangle	| |	43	129	Rectangle: Visibility Control	{pcu-1\0_off}
	| |			Rectangle: Color Control	If (alm_in_alarm({pcu-1\0_off}) AND system\BlinkSlow) Then 6 Else 8
Group4	| +-Group4				
Group6	| ++Group6	133	129		
Rectangle	| |	134	129	Rectangle: Color Control	If (alm_in_alarm({pcu-1\0_off}) AND system\BlinkSlow) Then 6 Else 8
	| |			Rectangle: Visibility Control	{pcu-1\0_off}
Group6	| +-Group6				
Group8	| ++Group8	224	129		
Rectangle	| |	225	129	Rectangle: Visibility Control	{pcu-1\0_off}
	| |			Rectangle: Color Control	If (alm_in_alarm({pcu-1\0_off}) AND system\BlinkSlow) Then 6 Else 8
Group8	| +-Group8				
Group10	| ++Group10	315	129		
Rectangle	| |	316	129	Rectangle: Color Control	If (alm_in_alarm({pcu-1\0_off}) AND system\BlinkSlow) Then 6 Else 8
	| |			Rectangle: Visibility Control	{pcu-1\0_off}
Group10	| +-Group10				
Group11	+-Group11				
Group13	++Group13	469	110		
Rectangle	|	472	112	Rectangle: Visibility Control	{pcu-1\0_off}
	|			Rectangle: Color Control	If (alm_in_alarm({pcu-1\0_off}) AND system\BlinkSlow) Then 6 Else 8
Group13	+-Group13				
Group27	++Group27	52	28		
Group27	|	52	28	Group: Touch Control: Press Action	Display 01overvw
Group27	+-Group27				
Group35	++Group35	42	192		
Rectangle	|	43	195	Rectangle: Color Control	If (alm_in_alarm({pcu-1\0_off}) AND system\BlinkSlow) Then 6 Else 8
	|			Rectangle: Visibility Control	{pcu-1\0_off}
Group35	+-Group35				
StringDisplay1		9	2	String Display	system\DateAndTimeString
Group37	++Group37	198	28		
Group37	|	198	28	Group: Touch Control: Press Action	ABORT *
					Display 03almsmc
	|			Group: Visibility Control	SECURITY >= 1
Group37	+-Group37				
Group39	++Group39	198	28		
Group39	|	198	28	Group: Touch Control: Press Action	Display 03almsmv
	|			Group: Visibility Control	SECURITY >= 1
Group39	+-Group39				
Display Commands		x	x	Startup Command	SCREEN_NUMBER = 2
				Shutdown Command	

2.2.5.3 Database Tags Used by the Component

Tag Name	Tag Type	Tag Description
MAINTENANCE_STATION	Digital	OIT STATION SELECTION - TRUE=MAINTENANCE, FALSE=OPERATOR
pcu-1\0_off	Digital	ALWAYS OFF PLACE HOLDER FOR PCU-1 VARIABLES
SCREEN_NUMBER	Analog	CURRENT SCREEN NUMBER (1 TO 12)
SECURITY	Analog	PRESENT SECURITY LEVEL
system\BlinkSlow	Digital	Changes every 500 ms
system\DateAndTimeString	String	System date and time string

2.2.6 Graphics\Display\03almsmc

HANFORD CROSS SITE TRANSFER SYSTEM - ALARM SUMMARY DISPLAY

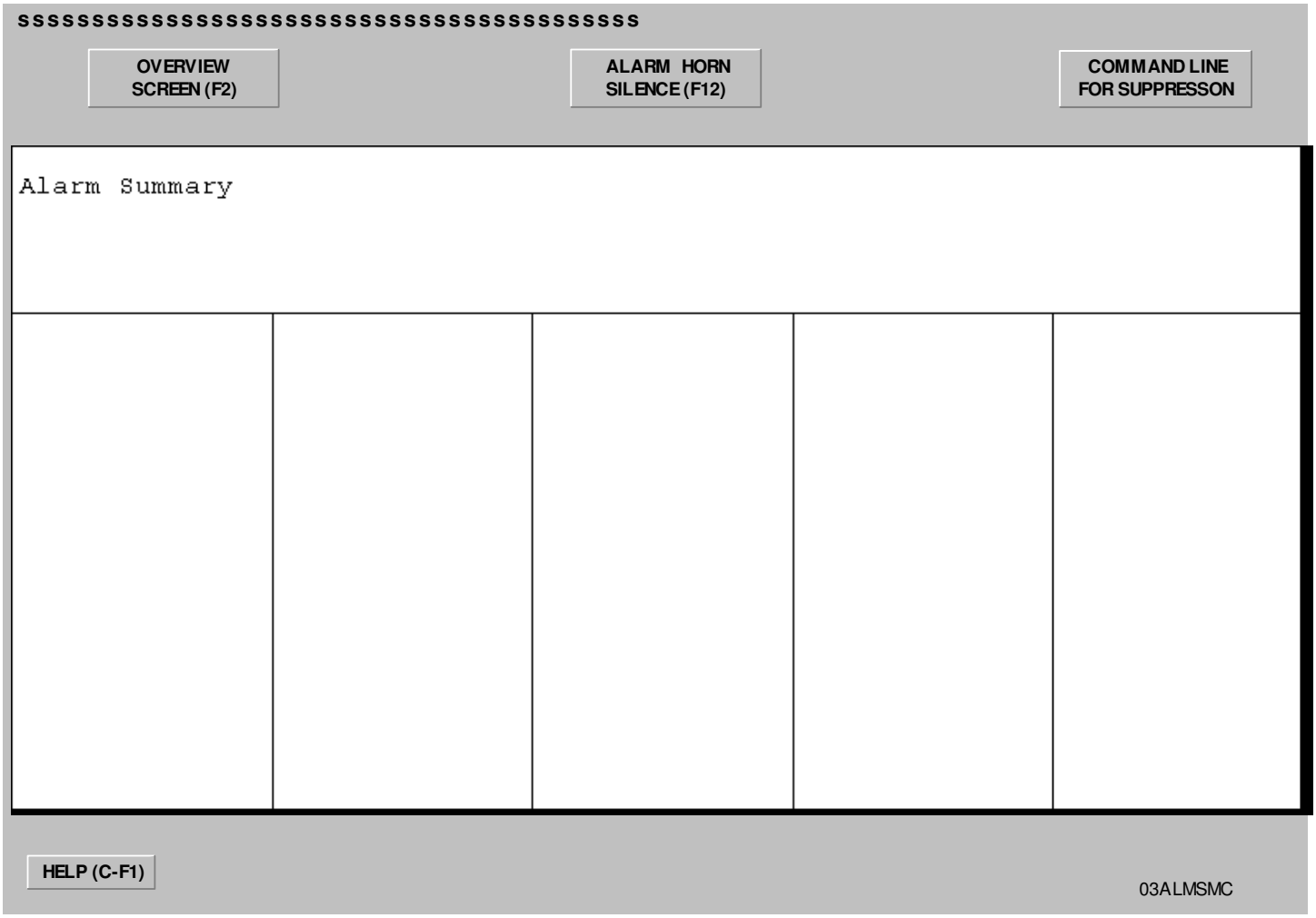

2.2.6.1 Display Settings

Section	Option	Selection
Properties	Display Type	Replace
	Allow Multiple Running Copies	No
	Cache after Displaying	Yes
	Title Bar	Yes "HANFORD CROSS SITE TRANSFER SYSTEM - ALARM SUMMARY DISPLAY"
	System Menu	No
	Minimize Button	No
	Maximize Button	No
	Size to Main Window at Runtime	Yes
	Show last Acquired Value	Yes
	Use Current Size	No (Size in Pixels: 790 x 551)
	Allow Display to be Resized	No
	Use Current Position	No (Position in Pixels: 0 x 0)
	Security Code	*
	Background Color	0xC0C0C0
Behavior	Startup Command	SCREEN_NUMBER = 3
	Shutdown Command	
	Input Field Not Selected Text Color	0x0
	Input Field Not Selected Fill Color	0xFFFFFF
	Input Field Selected Text Color	0xFFFFFF
	Input Field Selected Fill Color	0x8000
	Beep on Press of Interactive Object	No
	Highlight when Cursor Passes Over Interactive Objects	Yes Highlight Color: 0x0
	Highlight Color of Objects with Input Focus	0x808080
	Display On-screen Keyboard	No

2.2.6.2 Animated Display Objects

Object Name	Grouping	X	Y	Property	Expression
Group2	++Group2	344	28		
Group2	|	344	28	Group: Visibility Control	MAINTENANCE_STATION == 0
	|			Group: Touch Control: Press Action	SilenceAll
Group2	+-Group2				
Group4	++Group4	52	28		
Group4	|	52	28	Group: Touch Control: Press Action	Display 01overvw
Group4	+-Group4				
Group6	++Group6	15	516		
Group6	|	15	516	Group: Touch Control: Press Action	ABORT
					Display 02help
Group5	| ++Group5	15	516		
Group5	| |	15	516	Group: Touch Control: Press Action	Abort
					Display 02HELP
Group5	| +-Group5				
Group6	+-Group6				
StringDisplay1		9	2	String Display	system\DateAndTimeString
Group10	++Group10	640	29		
Group10	|	640	29	Group: Visibility Control	SECURITY >= 2
	|			Group: Touch Control: Press Action	CommandLine
Group10	+-Group10				
Display Commands		x	x	Startup Command	SCREEN_NUMBER = 3
				Shutdown Command	

2.2.6.3 Database Tags Used by the Component

Tag Name	Tag Type	Tag Description
MAINTENANCE_STATION	Digital	OIT STATION SELECTION - TRUE=MAINTENANCE, FALSE=OPERATOR
SCREEN_NUMBER	Analog	CURRENT SCREEN NUMBER (1 TO 12)
SECURITY	Analog	PRESENT SECURITY LEVEL
system\DateAndTimeString	String	System date and time string

2.2.7 Graphics\Display\03almsmv

HANFORD CROSS SITE TRANSFER SYSTEM - ALARM SUMMARY DISPLAY

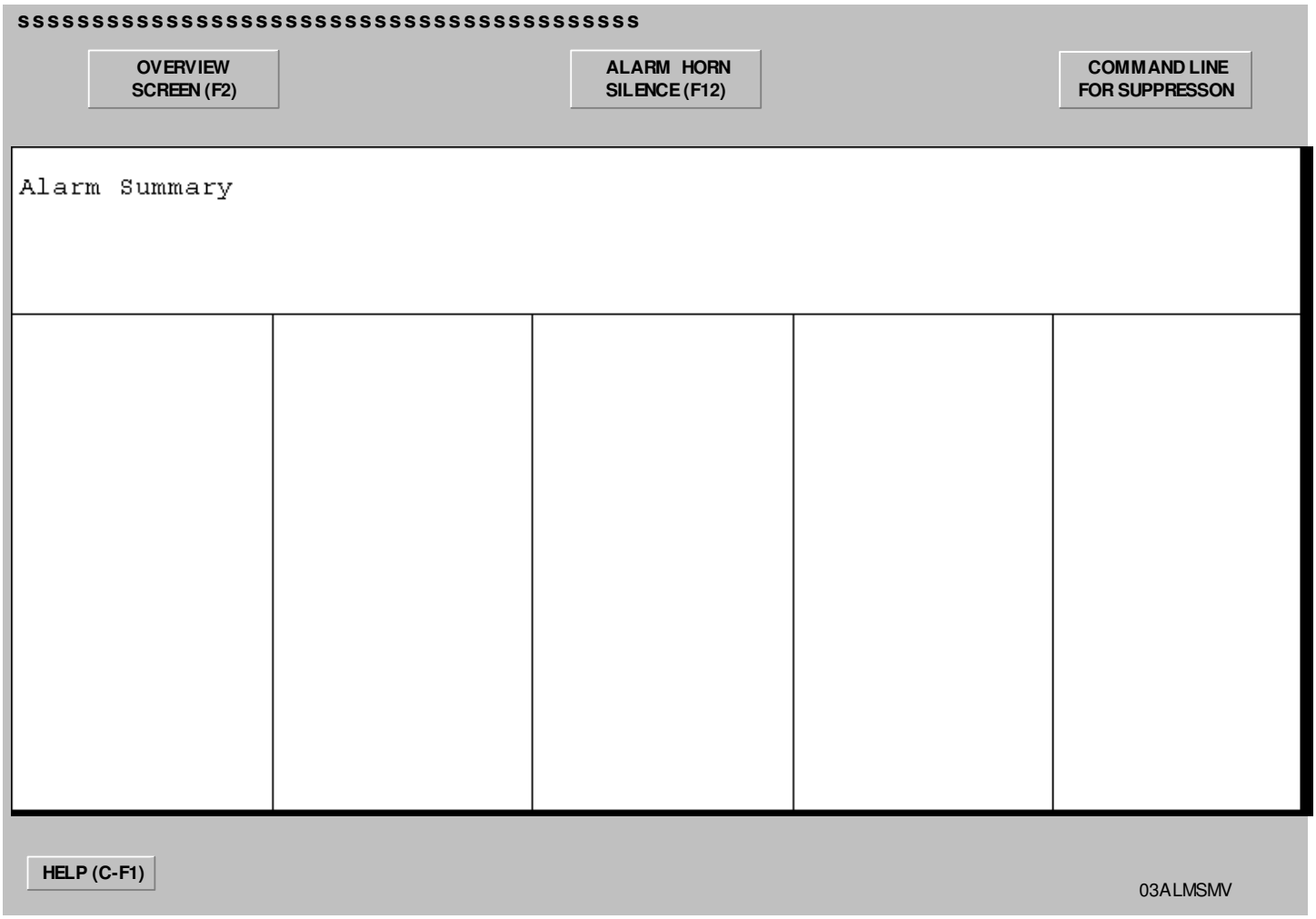

2.2.7.1 Display Settings

Section	Option	Selection
Properties	Display Type	Replace
	Allow Multiple Running Copies	No
	Cache after Displaying	Yes
	Title Bar	Yes "HANFORD CROSS SITE TRANSFER SYSTEM - ALARM SUMMARY DISPLAY"
	System Menu	No
	Minimize Button	No
	Maximize Button	No
	Size to Main Window at Runtime	Yes
	Show last Acquired Value	Yes
	Use Current Size	No (Size in Pixels: 790 x 551)
	Allow Display to be Resized	No
	Use Current Position	No (Position in Pixels: 0 x 0)
	Security Code	*
	Background Color	0xC0C0C0
Behavior	Startup Command	SCREEN_NUMBER = 3
	Shutdown Command	
	Input Field Not Selected Text Color	0x0
	Input Field Not Selected Fill Color	0xFFFFFF
	Input Field Selected Text Color	0xFFFFFF
	Input Field Selected Fill Color	0x8000
	Beep on Press of Interactive Object	No
	Highlight when Cursor Passes Over Interactive Objects	Yes Highlight Color: 0x0
	Highlight Color of Objects with Input Focus	0x808080
	Display On-screen Keyboard	No

2.2.7.2 Animated Display Objects

Object Name	Grouping	X	Y	Property	Expression
Group4	++Group4	344	28		
Group4	|	344	28	Group: Visibility Control	MAINTENANCE_STATION == 0
	|			Group: Touch Control: Press Action	SilenceAll
Group4	+-Group4				
Group6	++Group6	52	28		
Group6	|	52	28	Group: Touch Control: Press Action	Abort Display Entry ABORT Display 01overvw
Group6	+-Group6				
Group8	++Group8	15	516		
Group8	|	15	516	Group: Touch Control: Press Action	ABORT Display 02help
Group7	| ++Group7	15	516		
Group7	| |	15	516	Group: Touch Control: Press Action	Abort Display 02HELP
Group7	| +-Group7				
Group8	+-Group8				
StringDisplay1		9	2	String Display	system\DateAndTimeString
Group10	++Group10	640	29		
Group10	|	640	29	Group: Visibility Control	SECURITY >= 2
	|			Group: Touch Control: Press Action	CommandLine
Group10	+-Group10				
Display Commands		x	x	Startup Command Shutdown Command	SCREEN_NUMBER = 3

2.2.7.3 Database Tags Used by the Component

Tag Name	Tag Type	Tag Description
MAINTENANCE_STATION	Digital	OIT STATION SELECTION - TRUE=MAINTENANCE, FALSE=OPERATOR
SCREEN_NUMBER	Analog	CURRENT SCREEN NUMBER (1 TO 12)
SECURITY	Analog	PRESENT SECURITY LEVEL
system\DateAndTimeString	String	System date and time string

2.2.8 Graphics\Display\04divbox

HANFORD CROSS SITE TRANSFER SYSTEM - PCU-2 - DIVERSION BOX 6241-A

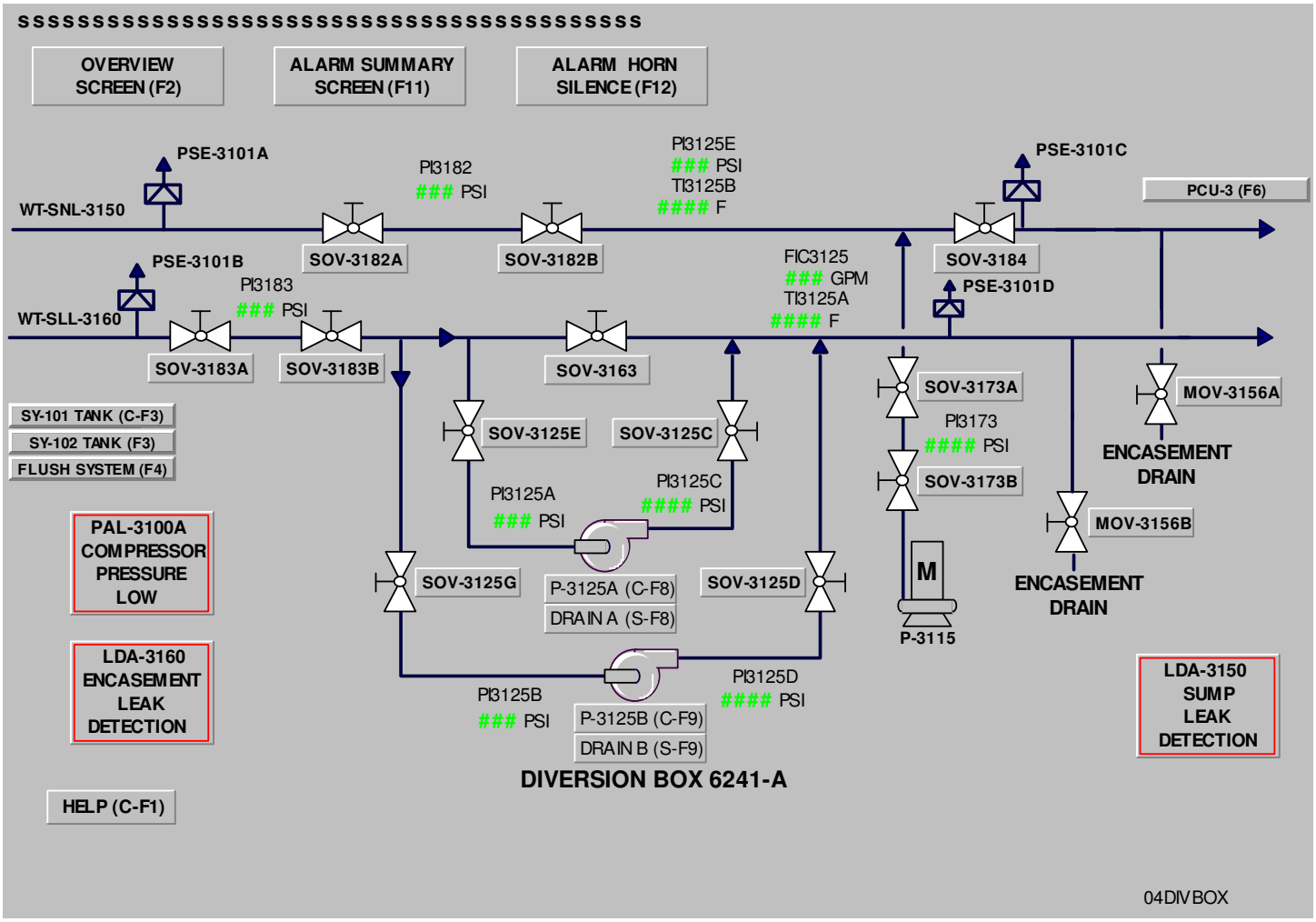

2.2.8.1 Display Settings

Section	Option	Selection
Properties	Display Type	Replace
	Allow Multiple Running Copies	No
	Cache after Displaying	Yes
	Title Bar	Yes "HANFORD CROSS SITE TRANSFER SYSTEM - PCU-2 - DIVERSION BOX 6241-A"
	System Menu	No
	Minimize Button	No
	Maximize Button	No
	Size to Main Window at Runtime	Yes
	Show last Acquired Value	Yes
	Use Current Size	No (Size in Pixels: 790 x 551)
	Allow Display to be Resized	No
	Use Current Position	No (Position in Pixels: 0 x 0)
	Security Code	*
	Background Color	0xC0C0C0
Behavior	Startup Command	SCREEN_NUMBER = 4
	Shutdown Command	
	Input Field Not Selected Text Color	0x0
	Input Field Not Selected Fill Color	0xFFFFFF
	Input Field Selected Text Color	0xFFFFFF
	Input Field Selected Fill Color	0x8000
	Beep on Press of Interactive Object	No
	Highlight when Cursor Passes Over Interactive Objects	Yes Highlight Color: 0x0
	Highlight Color of Objects with Input Focus	0x808080
	Display On-screen Keyboard	No

2.2.8.2 Animated Display Objects

Object Name	Grouping	X	Y	Property	Expression
Group2	++Group2	41	384		
Group2	|	41	384	Group: Color Control	{PCU-2\LDA-3160}
Group2	+-Group2				
Group4	++Group4	41	306		
Group4	|	41	306	Group: Color Control	{PCU-2\PAL-3100A}
Group4	+-Group4				
Group6	++Group6	18	26		
Group6	|	18	26	Group: Touch Control: Press Action	Display 01overvw
Group6	+-Group6				
Group8	++Group8	310	26		
Group8	|	310	26	Group: Visibility Control	MAINTENANCE_STATION == 0
	|			Group: Touch Control: Press Action	SilenceAll
Group8	+-Group8				
Group11	++Group11	345	311		
Group11	|	345	311	Group: Color Control	if({PCU-2\TAH-3125A1} OR {PCU-2\TAH-3125A2} OR NOT {PCU-2\TAH-3125A} OR NOT {PCU-2\PAL-3125A1} OR NOT {PCU-2\PAL-3125A2} OR NOT {PCU-2\FAH-3125A1} OR NOT {PCU-2\FAH-3125A2} OR NOT {PCU-2\LAL-3125A1} OR NOT {PCU-2\LAL-3125A2} OR {PCU-2\VAH-3125A1} OR {PCU-2\VAH-3125A2} OR {PCU-2\XA-3125A}) then 2 else if ({PCU-2\P-3125A1}) then 1 else if (NOT {PCU-2\P-3125A1}) then 0 else 2
Group11	+-Group11				
Group13	++Group13	6	243		
Group13	|	6	243	Group: Touch Control: Press Action	ABORT DISPLAY 12FLUSH
Group13	+-Group13				
Group14	++Group14	6	258		
Group14	|	6	258	Group: Touch Control: Press Action	ABORT DISPLAY 11SYTANK
Group14	+-Group14				
Group21	++Group21	684	392		
Group21	|	684	392	Group: Color Control	{PCU-2\LDA-3150}
Group21	+-Group21				
Group23	++Group23	88	211		
Group23	|	88	211	Group: Touch Control: Press Action	VALVE_NAME = "SOV-3183A" DISPLAY SOV-2POS /PS3183A /Q4
Group23	+-Group23				
Group25	++Group25	167	211		
Group25	|	167	211	Group: Touch Control: Press Action	VALVE_NAME = "SOV-3183B" DISPLAY SOV-2POS /PS3183B /Q4
Group25	+-Group25				
Group27	++Group27	289	250		
Group27	|	289	250	Group: Touch Control: Press Action	VALVE_NAME = "SOV-3125E" DISPLAY SOV-2POS /PS3125E /Q4
Group27	+-Group27				
Group29	++Group29	368	250		
Group29	|	368	250	Group: Touch Control: Press Action	VALVE_NAME = "SOV-3125C" DISPLAY SOV-2POS /PS3125C /Q3
Group29	+-Group29				
Group31	++Group31	327	212		
Group31	|	327	212	Group: Touch Control: Press Action	VALVE_NAME = "SOV-3163" DISPLAY SOV-2POS /PS3163 /Q4
Group31	+-Group31				
Group33	++Group33	249	340		
Group33	|	249	340	Group: Touch Control: Press Action	VALVE_NAME = "SOV-3125G" DISPLAY SOV-2POS /PS3125G /Q4
Group33	+-Group33				
Group35	++Group35	421	340		
Group35	|	421	340	Group: Touch Control: Press Action	VALVE_NAME = "SOV-3125D" DISPLAY SOV-2POS /PS3125D /Q3
Group35	+-Group35				
Group37	++Group37	552	222		
Group37	|	552	222	Group: Touch Control: Press Action	VALVE_NAME = "SOV-3173A" DISPLAY SOV-2POS /PS3173A /Q3
Group37	+-Group37				
Group39	++Group39	552	279		
Group39	|	552	279	Group: Touch Control: Press Action	VALVE_NAME = "SOV-3173B" DISPLAY SOV-2POS /PS3173B /Q3
Group39	+-Group39				
Group41	++Group41	181	145		
Group41	|	181	145	Group: Touch Control: Press Action	VALVE_NAME = "SOV-3182A" DISPLAY SOV-2POS /U /PS3182A /Q4
Group41	+-Group41				
Group43	++Group43	299	145		
Group43	|	299	145	Group: Touch Control: Press Action	VALVE_NAME = "SOV-3182B" DISPLAY SOV-2POS /PS3182B /Q4
Group43	+-Group43				
Group45	++Group45	562	145		
Group45	|	562	145	Group: Touch Control: Press Action	VALVE_NAME = "SOV-3184" DISPLAY SOV-2POS /PS3184 /Q3
Group45	+-Group45				
Group47	++Group47	327	344		
Group47	|	327	344	Group: Touch Control: Press Action	DISPLAY 05P3125A
Group47	+-Group47				
Group49	++Group49	345	422		

Object Name	Grouping	X	Y	Property	Expression
Group49	|	345	422	Group: Touch Control: Press Action	DISPLAY 06P3125B
Group49	+-Group49				
Group51	++Group51	345	440		
Group51	|	345	440	Group: Touch Control: Press Action	DISPLAY 08DRAINB
Group51	+-Group51				
NumericDisplay1		249	106	Numeric Display Numeric Display: Color Control	{PCU-2\PI-3182} NOT ({PCU-2\PI-3182_A} OR {PCU-2\PAH-3182})
NumericDisplay2		403	90	Numeric Display Numeric Display: Color Control	{PCU-2\PI-3125E} NOT {PCU-2\PI-3125E_A}
NumericDisplay3		141	177	Numeric Display Numeric Display: Color Control	{PCU-2\PI-3183} NOT ({PCU-2\PI-3183_A} OR {PCU-2\PAH-3183})
NumericDisplay4		296	304	Numeric Display Numeric Display: Color Control	{PCU-2\PI-3125A} NOT ({PCU-2\PI-3125A_A} OR {PCU-2\PAL-3125A} OR {PCU-2\PAH-3125A})
NumericDisplay5		385	295	Numeric Display Numeric Display: Color Control	{PCU-2\PI-3125C} NOT ({PCU-2\PI-3125C_A} OR {PCU-2\PAH-3125C})
NumericDisplay6		287	425	Numeric Display Numeric Display: Color Control	{PCU-2\PI-3125B} NOT ({PCU-2\PI-3125B_A} OR {PCU-2\PAL-3125B} OR {PCU-2\PAH-3125B})
NumericDisplay7		433	412	Numeric Display Numeric Display: Color Control	{PCU-2\PI-3125D} NOT ({PCU-2\PI-3125D_A} OR {PCU-2\PAH-3125D})
NumericDisplay8		556	259	Numeric Display Numeric Display: Color Control	{PCU-2\PI-3173} NOT ({PCU-2\PI-3173_A} OR {PCU-2\PAH-3173})
NumericDisplay9		472	158	Numeric Display Numeric Display: Color Control	{PCU-2\FIC-3125} NOT {PCU-2\FIC-3125_A}
NumericDisplay10		463	184	Numeric Display Numeric Display: Color Control	{PCU-2\TI-3125A} NOT {PCU-2\TI-3125A_A}
Group52	++Group52	193	120		
Group52	|	193	120	Group: Color Control	if({PCU-2\ZA-3182A} OR {PCU-2\ZA-3182A1} OR {PCU-2\ZA-3182A2}) then 2 else if ({PCU-2\ZLH-3182A}) then 1 else if ({PCU-2\ZLL-3182A}) then 0 else 2
Group52	+-Group52				
Group53	++Group53	340	185		
Group53	|	340	185	Group: Color Control	if({PCU-2\0_OFF}) then 2 else if ({PCU-2\ZLH-3163}) then 1 else if ({PCU-2\ZLL-3163}) then 0 else 2
Group53	+-Group53				
Group54	++Group54	101	185		
Group54	|	101	185	Group: Color Control	if({PCU-2\ZA-3183A} OR {PCU-2\ZA-3183A1} OR {PCU-2\ZA-3183A2}) then 2 else if ({PCU-2\ZLH-3183A}) then 1 else if ({PCU-2\ZLL-3183A}) then 0 else 2
Group54	+-Group54				
Group55	++Group55	431	239		
Group55	|	431	239	Group: Color Control	if({PCU-2\ZA-3125C} OR {PCU-2\ZA-3125C1} OR {PCU-2\ZA-3125C2}) then 2 else if ({PCU-2\ZLH-3125C}) then 1 else if ({PCU-2\ZLL-3125C}) then 0 else 2
Group55	+-Group55				
Group56	++Group56	225	330		
Group56	|	225	330	Group: Color Control	if({PCU-2\ZA-3125G} OR {PCU-2\ZA-3125G1} OR {PCU-2\ZA-3125G2}) then 2 else if ({PCU-2\ZLH-3125G}) then 1 else if ({PCU-2\ZLL-3125G}) then 0 else 2
Group56	+-Group56				
Group57	++Group57	180	185		
Group57	|	180	185	Group: Color Control	if({PCU-2\ZA-3183B} OR {PCU-2\ZA-3183B1} OR {PCU-2\ZA-3183B2}) then 2 else if ({PCU-2\ZLH-3183B}) then 1 else if ({PCU-2\ZLL-3183B}) then 0 else 2
Group57	+-Group57				
Group58	++Group58	313	120		
Group58	|	313	120	Group: Color Control	if({PCU-2\ZA-3182B} OR {PCU-2\ZA-3182B1} OR {PCU-2\ZA-3182B2}) then 2 else if ({PCU-2\ZLH-3182B}) then 1 else if ({PCU-2\ZLL-3182B}) then 0 else 2
Group58	+-Group58				
Group59	++Group59	574	120		
Group59	|	574	120	Group: Color Control	if ({PCU-2\ZA-3184} OR {PCU-2\ZA-3184-1} OR {PCU-2\ZA-3184-2}) then 2 else if ({PCU-2\ZLH-3184}) then 1 else if ({PCU-2\ZLL-3184}) then 0 else 2
Group59	+-Group59				
Group60	++Group60	266	239		

Object Name	Grouping	X	Y	Property	Expression
Group60	|	266	239	Group: Color Control	if({PCU-2\ZA-3125E} OR {PCU-2\ZA-3125E1} OR {PCU-2\ZA-3125E2}) then 2 else if ({PCU-2\ZLH-3125E}) then 1 else if ({PCU-2\ZLL-3125E}) then 0 else 2
Group60	+-Group60				
Group61	++Group61	528	213		
Group61	|	528	213	Group: Color Control	if({PCU-2\ZA-3173A} OR {PCU-2\ZA-3173A1} OR {PCU-2\ZA-3173A2}) then 2 else if ({PCU-2\ZLH-3173A}) then 1 else if ({PCU-2\ZLL-3173A}) then 0 else 2
Group61	+-Group61				
Group62	++Group62	528	269		
Group62	|	528	269	Group: Color Control	if({PCU-2\ZA-3173B} OR {PCU-2\ZA-3173B1} OR {PCU-2\ZA-3173B2}) then 2 else if ({PCU-2\ZLH-3173B}) then 1 else if ({PCU-2\ZLL-3173B}) then 0 else 2
Group62	+-Group62				
Group63	++Group63	484	330		
Group63	|	484	330	Group: Color Control	if({PCU-2\ZA-3125D} OR {PCU-2\ZA-3125D1} OR {PCU-2\ZA-3125D2}) then 2 else if ({PCU-2\ZLH-3125D}) then 1 else if ({PCU-2\ZLL-3125D}) then 0 else 2
Group63	+-Group63				
Group65	++Group65	327	362		
Group65	|	327	362	Group: Touch Control: Press Action	DISPLAY 07DRAINA
Group65	+-Group65				
Group68	++Group68	363	389		
Group68	|	363	389	Group: Color Control	if({PCU-2\TAH-3125B1} OR {PCU-2\TAH-3125B2} OR NOT {PCU-2\TAH-3125B} OR NOT {PCU-2\PAL-3125B1} OR NOT {PCU-2\PAL-3125B2} OR NOT {PCU-2\FAH-3125B1} OR NOT {PCU-2\FAH-3125B2} OR NOT {PCU-2\LAL-3125B1} OR NOT {PCU-2\LAL-3125B2} OR {PCU-2\VAH-3125B1} OR {PCU-2\VAH-3125B2} OR {PCU-2\XA-3125B}) then 2 else if ({PCU-2\P-3125B1}) then 1 else if (NOT {PCU-2\P-3125B1}) then 0 else 2
Group68	+-Group68				
Group70	++Group70	27	474		
Group70	|	27	474	Group: Touch Control: Press Action	ABORT Display 02help
Group69	| ++Group69	27	474		
Group69	| |	27	474	Group: Touch Control: Press Action	Abort Display 02HELP
Group69	| +-Group69				
Group70	+-Group70				
StringDisplay1		9	2	String Display	system\DateAndTimeString
NumericDisplay11		395	115	Numeric Display	{PCU-2\TI-3125B}
				Numeric Display: Color Control	NOT {PCU-2\TI-3125B_A}
Group72	++Group72	164	26		
Group72	|	164	26	Group: Visibility Control	SECURITY >= 1
	|			Group: Touch Control: Press Action	ABORT * Display 03almsmc
Group72	+-Group72				
Group74	++Group74	164	26		
Group74	|	164	26	Group: Touch Control: Press Action	Display 03almsmv
	|			Group: Visibility Control	SECURITY >= 1
Group74	+-Group74				
Group76	++Group76	655	304		
Group76	|	655	304	Group: Touch Control: Press Action	VALVE_NAME = "MOV-3156B" DISPLAY MOV-2POS /PM3156B /Q3
Group76	+-Group76				
Group78	++Group78	708	225		
Group78	|	708	225	Group: Touch Control: Press Action	VALVE_NAME = "MOV-3156A" DISPLAY MOV-2POS /PM3156A /Q3
Group78	+-Group78				
Group79	++Group79	684	217		
Group79	|	684	217	Group: Color Control	if({PCU-2\ZA-3156A} OR {PCU-2\ZA-3156A1} OR {PCU-2\ZA-3156A2}) then 2 else if ({PCU-2\ZLH-3156A}) then 1 else if ({PCU-2\ZLL-3156A}) then 0 else 2
Group79	+-Group79				
Group80	++Group80	630	294		
Group80	|	630	294	Group: Color Control	if({PCU-2\ZA-3156B} OR {PCU-2\ZA-3156B1} OR {PCU-2\ZA-3156B2}) then 2 else if ({PCU-2\ZLH-3156B}) then 1 else if ({PCU-2\ZLL-3156B}) then 0 else 2
Group80	+-Group80				
Button1		4	241	Button: "SY-101 TANK (C-F3)": Touch Control: Release Action	Display 11sy101
Button2		4	257	Button: "SY-102 TANK (F3)": Touch Control: Release Action	Display 12sy102
Button4		4	273	Button: "FLUSH SYSTEM (F4)": Touch Control: Release Action	Display 13flush
Button5		688	105	Button: "PCU-3 (F6)": Touch Control: Release Action	Display 09VENTSN
Display Keys		x	x	Display Key: "BOOSTER PUMP A": Press Action	DISPLAY 05P3125A
				Display Key: "BOOSTER PUMP A": Repeat Action	DISPLAY 05P3125A

Object Name	Grouping	X	Y	Property	Expression
		x	x	Display Key: "PUMP A DRAIN VALVES": Press Action	DISPLAY 07DRAINA
				Display Key: "PUMP A DRAIN VALVES": Repeat Action	DISPLAY 07DRAINA
		x	x	Display Key: "BOOSTER PUMP B": Press Action	DISPLAY 06P3125B
				Display Key: "BOOSTER PUMP B": Repeat Action	DISPLAY 06P3125B
		x	x	Display Key: "PUMP B DRAIN VALVES": Press Action	DISPLAY 08DRAINB
				Display Key: "PUMP B DRAIN VALVES": Repeat Action	DISPLAY 08DRAINB
Display Commands		x	x	Startup Command	SCREEN_NUMBER = 4
				Shutdown Command	

2.2.8.3 Database Tags Used by the Component

Tag Name	Tag Type	Tag Description
MAINTENANCE_STATION	Digital	OIT STATION SELECTION - TRUE=MAINTENANCE, FALSE=OPERATOR
PCU-2\0_OFF	Digital	ALWAYS OFF PLACE HOLDER FOR PCU-2 VARIABLES
PCU-2\FAH-3125A1	Digital	LOW AIR FLOW PUMP SEAL PUMP P-3125A [OFF = ALARM] Y76
PCU-2\FAH-3125A2	Digital	LOW AIR FLOW PUMP SEAL PUMP P-3125A [OFF = ALARM] Y76
PCU-2\FAH-3125B1	Digital	LOW AIR FLOW PUMP SEAL PUMP P-3125B [OFF = ALARM] Y76
PCU-2\FAH-3125B2	Digital	LOW AIR FLOW PUMP SEAL PUMP P-3125B [OFF = ALARM] Y76
PCU-2\FIC-3125	Analog	PUMP P-3125 A/B OUTLET FLOW
PCU-2\FIC-3125_A	Digital	PCU-2 INPUT ANALOG OVER OR UNDER RANGE ALARM
PCU-2\LAL-3125A1	Digital	PUMP P-3125A LOW OIL LEVEL [OFF = ALARM] Y76
PCU-2\LAL-3125A2	Digital	PUMP P-3125A LOW OIL LEVEL [OFF = ALARM] Y76
PCU-2\LAL-3125B1	Digital	PUMP P-3125B LOW OIL LEVEL [OFF = ALARM] Y76
PCU-2\LAL-3125B2	Digital	PUMP P-3125B LOW OIL LEVEL [OFF = ALARM] Y76
PCU-2\LDA-3150	Digital	LEAK DETECTED AT DIVERSION BOX 6241-A SUMP Y-72.1
PCU-2\LDA-3160	Digital	6241-A ENCASEMENT LEAK DETECTION [OFF = ALARM] Y72
PCU-2\P-3125A1	Digital	START PUMP P-3125A Y74-1
PCU-2\P-3125B1	Digital	START PUMP P-3125B Y74-2
PCU-2\PAH-3125A	Digital	BOOSTER PUMP HIGH INLET PRESSURE Y-75.1
PCU-2\PAH-3125B	Digital	BOOSTER PUMP HIGH INLET PRESSURE Y-75.1
PCU-2\PAH-3125C	Digital	BOOSTER PUMP HIGH DISCHARGE PRESSURE Y-78.1
PCU-2\PAH-3125D	Digital	BOOSTER PUMP HIGH DISCHARGE PRESSURE Y-78.1
PCU-2\PAH-3173	Digital	VALVE SOV-3173A/B FAILURE Y-73.1
PCU-2\PAH-3182	Digital	VALVE SOV-3182A/B FAILURE
PCU-2\PAH-3183	Digital	VALVE SOV-3183A/B FAILURE
PCU-2\PAL-3100A	Digital	LOW COMPRESSOR SA-CMP-3101A PRESSURE
PCU-2\PAL-3125A	Digital	BOOSTER PUMP LOW INLET PRESSURE Y-74.1
PCU-2\PAL-3125A1	Digital	PUMP P-3125A SEAL FAILURE [OFF = ALARM] Y76
PCU-2\PAL-3125A2	Digital	PUMP P-3125A SEAL FAILURE [OFF = ALARM] Y76
PCU-2\PAL-3125B	Digital	BOOSTER PUMP LOW INLET PRESSURE Y-74.2
PCU-2\PAL-3125B1	Digital	PUMP P-3125B SEAL FAILURE [OFF = ALARM] Y76
PCU-2\PAL-3125B2	Digital	PUMP P-3125B SEAL FAILURE [OFF = ALARM] Y76
PCU-2\PI-3125A	Analog	PUMP P-3125A INLET PRESSURE
PCU-2\PI-3125A_A	Digital	PCU-2 INPUT ANALOG OVER OR UNDER RANGE ALARM
PCU-2\PI-3125B	Analog	PUMP P-3125B INLET PRESSURE
PCU-2\PI-3125B_A	Digital	PCU-2 INPUT ANALOG OVER OR UNDER RANGE ALARM
PCU-2\PI-3125C	Analog	PUMP P-3125A OUTLET PRESSURE
PCU-2\PI-3125C_A	Digital	PCU-2 INPUT ANALOG OVER OR UNDER RANGE ALARM
PCU-2\PI-3125D	Analog	PUMP P-3125B OUTLET PRESSURE
PCU-2\PI-3125D_A	Digital	PCU-2 INPUT ANALOG OVER OR UNDER RANGE ALARM
PCU-2\PI-3125E	Analog	LINE WT-SNL-3150 PRESSURE
PCU-2\PI-3125E_A	Digital	PCU-2 INPUT ANALOG OVER OR UNDER RANGE ALARM
PCU-2\PI-3173	Analog	VALVE SOV-3173A/B PRESSURE
PCU-2\PI-3173_A	Digital	PCU-2 INPUT ANALOG OVER OR UNDER RANGE ALARM
PCU-2\PI-3182	Analog	VALVE SOV-3182A/B PRESSURE
PCU-2\PI-3182_A	Digital	PCU-2 INPUT ANALOG OVER OR UNDER RANGE ALARM
PCU-2\PI-3183	Analog	VALVE SOV-3183A/B PRESSURE
PCU-2\PI-3183_A	Digital	PCU-2 INPUT ANALOG OVER OR UNDER RANGE ALARM
PCU-2\TAH-3125A	Digital	PUMP P-3125A MOTOR WINDING TEMP. HIGH [OFF = ALARM] Y76
PCU-2\TAH-3125A1	Digital	PUMP P-3125A INBOARD BEARING HIGH TEMP. Y-76.1
PCU-2\TAH-3125A2	Digital	PUMP P-3125A OUTBOARD BEARING HIGH TEMP. Y-76.1
PCU-2\TAH-3125B	Digital	PUMP P-3125B MOTOR WINDING TEMP. HIGH [OFF = ALARM] Y76
PCU-2\TAH-3125B1	Digital	PUMP P-3125B INBOARD BEARING HIGH TEMP. Y-76.1
PCU-2\TAH-3125B2	Digital	PUMP P-3125B OUTBOARD BEARING HIGH TEMP. Y-76.1
PCU-2\TI-3125A	Analog	PUMP P-3125A/B OUTLET FLOW TEMPERATURE WT-SLL-3160
PCU-2\TI-3125A_A	Digital	PCU-2 INPUT THERMOCOUPLE OVER OR UNDER RANGE ALARM
PCU-2\TI-3125B	Analog	LINE WT-SNL-3150 TEMPERATURE
PCU-2\TI-3125B_A	Digital	PCU-2 INPUT THERMOCOUPLE OVER OR UNDER RANGE ALARM
PCU-2\VAH-3125A1	Digital	PUMP P-3125A HIGH MOTOR VIBRATION Y-76.1
PCU-2\VAH-3125A2	Digital	PUMP P-3125A HIGH MOTOR VIBRATION Y-76.1
PCU-2\VAH-3125B1	Digital	PUMP P-3125B HIGH MOTOR VIBRATION Y-76.1
PCU-2\VAH-3125B2	Digital	PUMP P-3125B HIGH MOTOR VIBRATION Y-76.1
PCU-2\XA-3125A	Digital	BOOSTER PUMP P-3125A FAILURE Y-74.1
PCU-2\XA-3125B	Digital	BOOSTER PUMP P-3125B FAILURE Y-74.2
PCU-2\ZA-3125C	Digital	VALVE SOV-3125C POSITION SWITCH FAILURE Y-84.1
PCU-2\ZA-3125C1	Digital	VALVE SOV-3125C FAILED TO OPEN Y-84.1
PCU-2\ZA-3125C2	Digital	VALVE SOV-3125C FAILED TO CLOSE Y-84.1
PCU-2\ZA-3125D	Digital	VALVE SOV-3125D POSITION SWITCH FAILURE Y-86.1
PCU-2\ZA-3125D1	Digital	VALVE SOV-3125D FAILED TO OPEN Y-86.1
PCU-2\ZA-3125D2	Digital	VALVE SOV-3125D FAILED TO CLOSE Y-86.1
PCU-2\ZA-3125E	Digital	VALVE SOV-3125E POSITION SWITCH FAILURE Y-83.1
PCU-2\ZA-3125E1	Digital	VALVE SOV-3125E FAILED TO OPEN Y-83.1
PCU-2\ZA-3125E2	Digital	VALVE SOV-3125E FAILED TO CLOSE Y-83.1
PCU-2\ZA-3125G	Digital	VALVE SOV-3125G POSITION SWITCH FAILURE Y-85.1
PCU-2\ZA-3125G1	Digital	VALVE SOV-3125G FAILED TO OPEN Y-85.1
PCU-2\ZA-3125G2	Digital	VALVE SOV-3125G FAILED TO CLOSE Y-85.1
PCU-2\ZA-3156A	Digital	VALVE MOV-3156A POSITION SWITCH FAILURE Y-89.1
PCU-2\ZA-3156A1	Digital	VALVE MOV-3156A FAILED TO OPEN Y-89.1
PCU-2\ZA-3156A2	Digital	VALVE MOV-3156A FAILED TO CLOSE Y-89.1

Tag Name	Tag Type	Tag Description
PCU-2\ZA-3156B	Digital	VALVE MOV-3156B POSITION SWITCH FAILURE Y-89.2
PCU-2\ZA-3156B1	Digital	VALVE MOV-3156B FAILED TO OPEN Y-89.2
PCU-2\ZA-3156B2	Digital	VALVE MOV-3156B FAILED TO CLOSE Y-89.2
PCU-2\ZA-3173A	Digital	VALVE SOV-3173A POSITION SWITCH FAILURE Y-87.1
PCU-2\ZA-3173A1	Digital	VALVE SOV-3173A FAILED TO OPEN Y-87.1
PCU-2\ZA-3173A2	Digital	VALVE SOV-3173A FAILED TO CLOSE Y-87.1
PCU-2\ZA-3173B	Digital	VALVE SOV-3173B POSITION SWITCH FAILURE Y-87.2
PCU-2\ZA-3173B1	Digital	VALVE SOV-3173B FAILED TO OPEN Y-87.2
PCU-2\ZA-3173B2	Digital	VALVE SOV-3173B FAILED TO CLOSE Y-87.2
PCU-2\ZA-3182A	Digital	VALVE POSITION SWITCH FAILURE Y-71.1
PCU-2\ZA-3182A1	Digital	VALVE FAILED TO OPEN Y-71.1
PCU-2\ZA-3182A2	Digital	VALVE FAILED TO CLOSE Y-71.1
PCU-2\ZA-3182B	Digital	VALVE POSITION SWITCH FAILURE Y-71.1
PCU-2\ZA-3182B1	Digital	VALVE FAILED TO OPEN Y-71.1
PCU-2\ZA-3182B2	Digital	VALVE FAILED TO CLOSE Y-71.1
PCU-2\ZA-3183A	Digital	VALVE POSITION SWITCH FAILURE Y-71.1
PCU-2\ZA-3183A1	Digital	VALVE FAILED TO OPEN Y-71.1
PCU-2\ZA-3183A2	Digital	VALVE FAILED TO CLOSE Y-71.1
PCU-2\ZA-3183B	Digital	VALVE POSITION SWITCH FAILURE Y-71.1
PCU-2\ZA-3183B1	Digital	VALVE FAILED TO OPEN Y-71.1
PCU-2\ZA-3183B2	Digital	VALVE FAILED TO CLOSE Y-71.1
PCU-2\ZA-3184	Digital	VALVE POSITION SWITCH FAILURE Y-71.1
PCU-2\ZA-3184-1	Digital	VALVE FAILED TO OPEN Y-71.1
PCU-2\ZA-3184-2	Digital	VALVE FAILED TO CLOSE Y-71.1
PCU-2\ZLH-3125C	Digital	SOV-3125C IS OPEN Y84-1
PCU-2\ZLH-3125D	Digital	SOV-3125D IS OPEN Y86-1
PCU-2\ZLH-3125E	Digital	SOV-3125E IS OPEN Y83-1
PCU-2\ZLH-3125G	Digital	SOV-3125G IS OPEN Y85-1
PCU-2\ZLH-3156A	Digital	MOV-3156A IS OPEN Y89-1
PCU-2\ZLH-3156B	Digital	MOV-3156B IS OPEN Y89-2
PCU-2\ZLH-3163	Digital	SOV-3163 IS OPEN
PCU-2\ZLH-3173A	Digital	SOV-3173A IS OPEN Y87-1
PCU-2\ZLH-3173B	Digital	SOV-3173B IS OPEN Y87-2
PCU-2\ZLH-3182A	Digital	SOV-3182A IS OPEN Y71
PCU-2\ZLH-3182B	Digital	SOV-3182B IS OPEN Y71
PCU-2\ZLH-3183A	Digital	SOV-3183A IS OPEN Y71
PCU-2\ZLH-3183B	Digital	SOV-3183B IS OPEN Y71
PCU-2\ZLH-3184	Digital	SOV-3184 IS OPEN Y71
PCU-2\ZLL-3125C	Digital	SOV-3125C IS CLOSED Y84-1
PCU-2\ZLL-3125D	Digital	SOV-3125D IS CLOSED Y86-1
PCU-2\ZLL-3125E	Digital	SOV-3125E IS CLOSED Y83-1
PCU-2\ZLL-3125G	Digital	SOV-3125G IS CLOSED Y85-1
PCU-2\ZLL-3156A	Digital	MOV-3156A IS CLOSED Y89-1
PCU-2\ZLL-3156B	Digital	MOV-3156B IS CLOSED Y89-2
PCU-2\ZLL-3163	Digital	SOV-3163 IS CLOSED
PCU-2\ZLL-3173A	Digital	SOV-3173A IS CLOSED Y87-1
PCU-2\ZLL-3173B	Digital	SOV-3173B IS CLOSED Y87-2
PCU-2\ZLL-3182A	Digital	SOV-3182A IS CLOSED Y71
PCU-2\ZLL-3182B	Digital	SOV-3182B IS CLOSED Y71
PCU-2\ZLL-3183A	Digital	SOV-3183A IS CLOSED Y71
PCU-2\ZLL-3183B	Digital	SOV-3183B IS CLOSED Y71
PCU-2\ZLL-3184	Digital	SOV-3184 IS CLOSED Y71
SCREEN_NUMBER	Analog	CURRENT SCREEN NUMBER (1 TO 12)
SECURITY	Analog	PRESENT SECURITY LEVEL
system\DateAndTimeString	String	System date and time string
VALVE_NAME	String	VALVE NAME FOR DISPLAY IN THE VALVE POP-UPS

2.2.9 Graphics\Display\05p3125a

HANFORD CROSS SITE TRANSFER SYSTEM - PCU-2 - BOOSTER PUMP P-3125A

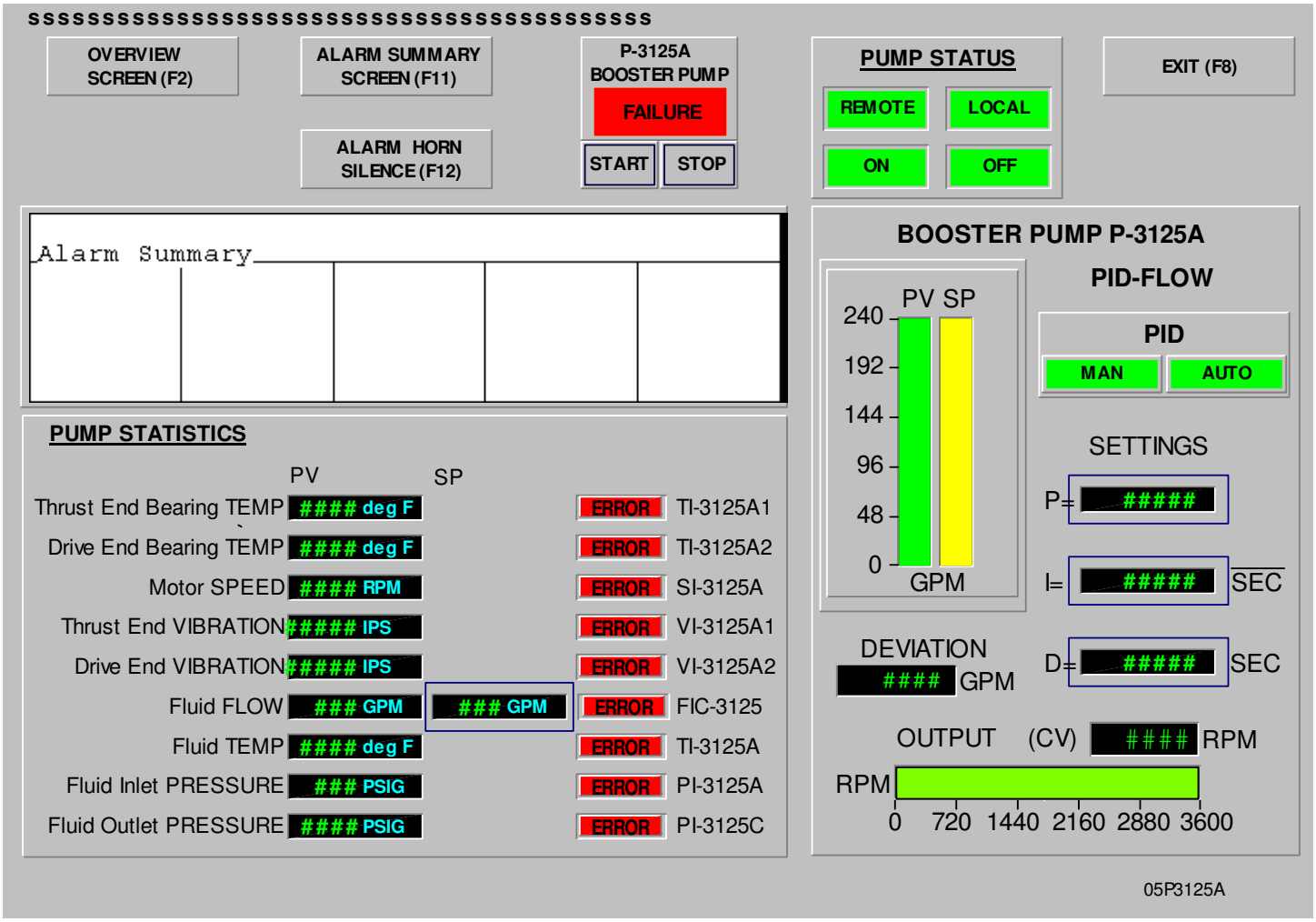

2.2.9.1 Display Settings

Section	Option	Selection
Properties	Display Type	On Top
	Allow Multiple Running Copies	No
	Cache after Displaying	Yes
	Title Bar	Yes "HANFORD CROSS SITE TRANSFER SYSTEM - PCU-2 - BOOSTER PUMP P-3125A"
	System Menu	No
	Minimize Button	No
	Maximize Button	No
	Size to Main Window at Runtime	Yes
	Show last Acquired Value	Yes
	Use Current Size	No (Size in Pixels: 790 x 551)
	Allow Display to be Resized	No
	Use Current Position	No (Position in Pixels: 0 x 0)
	Security Code	*
	Background Color	0xC0C0C0
Behavior	Startup Command	SCREEN_NUMBER = 5; PB_INDICATOR = 0
	Shutdown Command	
	Input Field Not Selected Text Color	0x0
	Input Field Not Selected Fill Color	0xC0C0C0
	Input Field Selected Text Color	0x0
	Input Field Selected Fill Color	0xC0C0C0
	Beep on Press of Interactive Object	No
	Highlight when Cursor Passes Over Interactive Objects	Yes Highlight Color: 0x0
	Highlight Color of Objects with Input Focus	0x808080
	Display On-screen Keyboard	No

2.2.9.2 Animated Display Objects

Object Name	Grouping	X	Y	Property	Expression
Group4	++Group4	259	320		
NumericDisplay1	|	276	320	Numeric Display	{pcu-2\ti-3125a1}
Group4	+-Group4				
NumericDisplay2		179	320	Numeric Display	{PCU-2\TI-3125A2}
				Numeric Display: Color Control	NOT {PCU-2\TAH-3125A2}
Group7	++Group7	259	344		
NumericDisplay3	|	267	344	Numeric Display	{pcu-2\si-3125a}
Group7	+-Group7				
NumericDisplay4		179	344	Numeric Display	{PCU-2\SI-3125A}
Group10	++Group10	259	368		
NumericDisplay5	|	267	368	Numeric Display	"XX"
Group10	+-Group10				
NumericDisplay6		170	368	Numeric Display	{PCU-2\VI-3125A1} / 100.0
				Numeric Display: Color Control	NOT {PCU-2\VAH-3125A1}
Group13	++Group13	259	392		
NumericDisplay7	|	267	392	Numeric Display	{pcu-2\si-3125a}
Group13	+-Group13				
NumericDisplay8		170	392	Numeric Display	{PCU-2\VI-3125A2} / 100.0
				Numeric Display: Color Control	NOT {PCU-2\VAH-3125A2}
NumericDisplay9		188	416	Numeric Display	{PCU-2\FIC-3125}
Group17	++Group17	259	440		
NumericDisplay10	|	276	440	Numeric Display	{pcu-2\ti-3125a1}
Group17	+-Group17				
NumericDisplay11		179	440	Numeric Display	{PCU-2\TI-3125A}
Group20	++Group20	259	464		
NumericDisplay12	|	276	464	Numeric Display	{pcu-2\pi-3125a}
Group20	+-Group20				
NumericDisplay13		188	464	Numeric Display	{PCU-2\PI-3125A}
				Numeric Display: Color Control	NOT ({PCU-2\PAL-3125A} OR {PCU-2\PAH-3125A})
Group23	++Group23	259	488		
NumericDisplay14	|	276	488	Numeric Display	{pcu-2\pi-3125a}
Group23	+-Group23				
NumericDisplay15		180	488	Numeric Display	{PCU-2\PI-3125C}
				Numeric Display: Color Control	NOT {PCU-2\PAH-3125C}
NumericDisplay16		179	296	Numeric Display	{PCU-2\TI-3125A1}
				Numeric Display: Color Control	NOT {PCU-2\TAH-3125A1}
Group27	++Group27	259	296		
NumericDisplay17	|	269	296	Numeric Display	{pcu-2\ti-3125a2}
Group27	+-Group27				
Group31	++Group31	346	296		
Group30	| ++Group30	348	297		
Group30	| |	348	297	Group: Visibility Control	{PCU-2\TI-3125A1_A}
Group30	| +-Group30				
Group31	+-Group31				
Group35	++Group35	346	319		
Group34	| ++Group34	348	321		
Group34	| |	348	321	Group: Visibility Control	{pcu-2\ti-3125a2_A}
Group34	| +-Group34				
Group35	+-Group35				
Group38	++Group38	346	344		
Group37	| ++Group37	348	345		
Group37	| |	348	345	Group: Visibility Control	{pcu-2\SI-3125a_A}
Group37	| +-Group37				
Group38	+-Group38				
Group42	++Group42	346	368		
Group41	| ++Group41	348	369		
Group41	| |	348	369	Group: Visibility Control	{pcu-2\VI-3125a1_A}
Group41	| +-Group41				
Group42	+-Group42				
Group46	++Group46	346	392		
Group45	| ++Group45	348	393		
Group45	| |	348	393	Group: Visibility Control	{pcu-2\VI-3125a2_A}
Group45	| +-Group45				
Group46	+-Group46				
Group51	++Group51	347	416		
Group50	| ++Group50	350	417		
Group50	| |	350	417	Group: Visibility Control	{pcu-2\FIC-3125_A}
Group50	| +-Group50				
Group51	+-Group51				
Group56	++Group56	346	440		
Group55	| ++Group55	348	441		
Group55	| |	348	441	Group: Visibility Control	{pcu-2\ti-3125A_A}
Group55	| +-Group55				
Group56	+-Group56				
Group60	++Group60	346	464		
Group59	| ++Group59	348	465		
Group59	| |	348	465	Group: Visibility Control	{pcu-2\PI-3125a_A}
Group59	| +-Group59				
Group60	+-Group60				
Group65	++Group65	346	488		
Group64	| ++Group64	348	489		
Group64	| |	348	489	Group: Visibility Control	{pcu-2\PI-3125C_A}
Group64	| +-Group64				
Group65	+-Group65				
Rectangle		255	409	Rectangle: Color Control	PB_INDICATOR == 3

Object Name	Grouping	X	Y	Property	Expression
Group68	++Group68	259	416		
Group67	| ++Group67	259	416		
NumericDisplay18	| |	275	416	Numeric Display	{PCU-2\PID-3125-FR}
Group67	| +-Group67				
Rectangle	|	260	417	Rectangle: Touch Control: Press Action	PB_INDICATOR = 3 DISPLAY ENTRY /U /TPCU-2\PID-3125-FR /CB
	|			Rectangle: Visibility Control	(SECURITY >= 1) AND (NOT {PCU-2\P-3125B1})
Group68	+-Group68				
Rectangle		541	190	Rectangle: Fill Control	{PCU-2\FIC-3125}
Rectangle		566	190	Rectangle: Fill Control	{PCU-2\PID-3125-FR}
NumericDisplay19		676	434	Numeric Display	{PCU-2\FIC-3125-O}
Group75	++Group75	180	76		
Group75	|	180	76	Group: Touch Control: Press Action	SilenceAll
	|			Group: Visibility Control	MAINTENANCE_STATION == 0
Group75	+-Group75				
Group77	++Group77	27	20		
Group77	|	27	20	Group: Touch Control: Press Action	DISPLAY 01OVERVW
Group77	+-Group77				
Group79	++Group79	664	20		
Group79	|	664	20	Group: Touch Control: Press Action	Abort 05p3125a
Group79	+-Group79				
NumericDisplay20		531	400	Numeric Display	{PCU-2\FIC-3125-E}
Group87	++Group87	534	434		
Group86	| ++Group86	539	460		
Rectangle	| |	539	460	Rectangle: Fill Control	{PCU-2\FIC-3125-O}
Group86	| +-Group86				
Group87	+-Group87				
StringDisplay1		15	0	String Display	system\DateAndTimeString
Rectangle		497	87	Rectangle: Visibility Control	{PCU-2\P-3125A1} == 1
Rectangle		571	52	Rectangle: Visibility Control	{PCU-2\YL-3125A3} == 0
Rectangle		497	52	Rectangle: Visibility Control	{PCU-2\YL-3125A3} == 1
Rectangle		571	87	Rectangle: Visibility Control	{PCU-2\P-3125A1} == 0
Group94	++Group94	397	83		
Group94	|	397	83	Group: Touch Control: Press Action	PB_INDICATOR = 2 DISPLAY PB_ACK /U /TPCU-2\HS-3125A2 /CL
	|			Group: Visibility Control	SECURITY >= 1
Rectangle	|	399	85	Rectangle: Color Control	PB_INDICATOR == 2
Group94	+-Group94				
Group96	++Group96	349	83		
Group96	|	349	83	Group: Touch Control: Press Action	PB_INDICATOR = 1 DISPLAY PB_ACK /U /TPCU-2\HS-3125A1 /CL
	|			Group: Visibility Control	(SECURITY >= 1) AND (NOT {PCU-2\P-3125B1}) AND {PCU-2\YL-3125A3}
Rectangle	|	351	85	Rectangle: Color Control	PB_INDICATOR == 1
Group96	+-Group96				
Group97	++Group97	357	51		
Group97	|	357	51	Group: Visibility Control	{PCU-2\P-3125A2}
Group97	+-Group97				
Group99	++Group99	180	20		
Group99	|	180	20	Group: Visibility Control	SECURITY >= 1
	|			Group: Touch Control: Press Action	ABORT * Display 03almsmc
Group99	+-Group99				
Group101	++Group101	180	20		
Group101	|	180	20	Group: Touch Control: Press Action	Display 03almsmv
	|			Group: Visibility Control	SECURITY >= 1
Group101	+-Group101				
Group104	++Group104	702	212		
Rectangle	|	704	214	Rectangle: Visibility Control	{PCU-2\HS-3125-M} <> 1
Group104	+-Group104				
Group106	++Group106	627	212		
Rectangle	|	629	214	Rectangle: Visibility Control	{PCU-2\HS-3125-M} == 1
Group106	+-Group106				
Group109	++Group109	627	212		
Group109	|	627	212	Group: Visibility Control	(SECURITY >= 1) AND (NOT {PCU-2\P-3125B1})
Group107	| ++Group107	627	212		
Group107	| |	627	212	Group: Touch Control: Press Action	PCU-2\HS-3125-M = 1
Group107	| +-Group107				
Group108	| ++Group108	702	212		
Group108	| |	702	212	Group: Touch Control: Press Action	PCU-2\HS-3125-M = 0
Group108	| +-Group108				
Rectangle	|	704	214	Rectangle: Visibility Control	{PCU-2\HS-3125-M} <> 1
Rectangle	|	629	214	Rectangle: Visibility Control	{PCU-2\HS-3125-M} == 1
Group109	+-Group109				
Rectangle		643	284	Rectangle: Color Control	PB_INDICATOR == 4
Group112	++Group112	650	291		
Group111	| ++Group111	650	291		
NumericDisplay21	| |	676	291	Numeric Display	{PCU-2\PID-3125-KP} / 100.0
Group111	| +-Group111				
Rectangle	|	651	292	Rectangle: Touch Control: Press Action	PB_INDICATOR = 4 DISPLAY ENTRY /U /TPCU-2\PID-3125-KP /CB
	|			Rectangle: Visibility Control	(SECURITY >= 2) AND (NOT {PCU-2\P-3125B1})
Group112	+-Group112				
Rectangle		643	333	Rectangle: Color Control	PB_INDICATOR == 5
Rectangle		643	382	Rectangle: Color Control	PB_INDICATOR == 6
Group115	++Group115	650	389		
Group114	| ++Group114	650	389		

Object Name	Grouping	X	Y	Property	Expression
NumericDisplay22	| |	676	389	Numeric Display	{PCU-2\PID-3125-KD} / 100.0
Group114	| +-Group114				
Rectangle	|	651	390	Rectangle: Touch Control: Press Action	PB_INDICATOR = 6 DISPLAY ENTRY /U /TPCU-2\PID-3125-KD /CB
	|			Rectangle: Visibility Control	(SECURITY >= 2) AND (NOT {PCU-2\P-3125B1})
Group115	+-Group115				
Group118	++Group118	650	340		
Group117	| ++Group117	650	340		
NumericDisplay23	| |	676	340	Numeric Display	{PCU-2\PID-3125-KI} / 100.0
Group117	| +-Group117				
Rectangle	|	651	341	Rectangle: Touch Control: Press Action	PB_INDICATOR = 5 DISPLAY ENTRY /U /TPCU-2\PID-3125-KI /CB
	|			Rectangle: Visibility Control	(SECURITY >= 2) AND (NOT {PCU-2\P-3125B1})
Group118	+-Group118				
Group119	++Group119	357	51		
Group119	|	357	51	Group: Visibility Control	{PCU-2\P-3125A1}
Group119	+-Group119				
Group120	++Group120	357	51		
Group120	|	357	51	Group: Visibility Control	(NOT {PCU-2\YL-3125A3})
Group120	+-Group120				
Group121	++Group121	357	51		
Group121	|	357	51	Group: Visibility Control	{PCU-2\XA-3125A}
Group121	+-Group121				
Display Commands		x	x	Startup Command Shutdown Command	SCREEN_NUMBER = 5; PB_INDICATOR = 0

2.2.9.3 Database Tags Used by the Component

Tag Name	Tag Type	Tag Description
MAINTENANCE_STATION	Digital	OIT STATION SELECTION - TRUE=MAINTENANCE, FALSE=OPERATOR
PB_INDICATOR	Analog	VALUE INDICATING THE PUSHBUTTON BEING ACKNOWLEDGED
PCU-2\FIC-3125	Analog	PUMP P-3125 A/B OUTLET FLOW
PCU-2\FIC-3125-E	Analog	PUMP P-3125 A/B PID CONTROL ERROR
PCU-2\FIC-3125-O	Analog	PUMP P-3125 A/B OUTLET FLOW / DRIVE SPEED REF OUTPUT
pcu-2\FIC-3125_A	Digital	PCU-2 INPUT ANALOG OVER OR UNDER RANGE ALARM
PCU-2\HS-3125-M	Digital	PID FOR PUMP P-3125 A/B MANUAL MODE
PCU-2\P-3125A1	Digital	START PUMP P-3125A Y74-1
PCU-2\P-3125A2	Digital	STOP PUMP P-3125A Y74-1
PCU-2\P-3125B1	Digital	START PUMP P-3125B Y74-2
PCU-2\PAH-3125A	Digital	BOOSTER PUMP HIGH INLET PRESSURE Y-75.1
PCU-2\PAH-3125C	Digital	BOOSTER PUMP HIGH DISCHARGE PRESSURE Y-78.1
PCU-2\PAL-3125A	Digital	BOOSTER PUMP LOW INLET PRESSURE Y-74.1
pcu-2\pi-3125a	Analog	PUMP P-3125A INLET PRESSURE
pcu-2\PI-3125a_A	Digital	PCU-2 INPUT ANALOG OVER OR UNDER RANGE ALARM
PCU-2\PI-3125C	Analog	PUMP P-3125A OUTLET PRESSURE
pcu-2\PI-3125C_A	Digital	PCU-2 INPUT ANALOG OVER OR UNDER RANGE ALARM
PCU-2\PID-3125-FR	Analog	PUMP P-3125 A/B OUTLET FLOW REFERENCE FROM OIT
PCU-2\PID-3125-KD	Analog	PUMP P-3125 A/B PID CONTROL DERIV. GAIN FROM OIT
PCU-2\PID-3125-KI	Analog	PUMP P-3125 A/B PID CONTROL INTEG. GAIN FROM OIT
PCU-2\PID-3125-KP	Analog	PUMP P-3125 A/B PID CONTROL PROP. GAIN FROM OIT
pcu-2\si-3125a	Analog	MOTOR SPEED PUMP P-3125A
pcu-2\SI-3125a_A	Digital	PCU-2 INPUT ANALOG OVER OR UNDER RANGE ALARM
PCU-2\TAH-3125A1	Digital	PUMP P-3125A INBOARD BEARING HIGH TEMP. Y-76.1
PCU-2\TAH-3125A2	Digital	PUMP P-3125A OUTBOARD BEARING HIGH TEMP. Y-76.1
PCU-2\TI-3125A	Analog	PUMP P-3125A/B OUTLET FLOW TEMPERATURE WT-SLL-3160
pcu-2\ti-3125A_A	Digital	PCU-2 INPUT THERMOCOUPLE OVER OR UNDER RANGE ALARM
pcu-2\ti-3125a1	Analog	PUMP P-3125A MOTOR BEARING TEMPERATURE
PCU-2\TI-3125A1_A	Digital	PCU-2 INPUT R.T.D. TEMP. OVER OR UNDER RANGE ALARM
pcu-2\ti-3125a2	Analog	PUMP P-3125A MOTOR BEARING TEMPERATURE
pcu-2\ti-3125a2_A	Digital	PCU-2 INPUT R.T.D. TEMP. OVER OR UNDER RANGE ALARM
PCU-2\VAH-3125A1	Digital	PUMP P-3125A HIGH MOTOR VIBRATION Y-76.1
PCU-2\VAH-3125A2	Digital	PUMP P-3125A HIGH MOTOR VIBRATION Y-76.1
PCU-2\VI-3125A1	Analog	PUMP P-3125A BEARING VIBRATION
pcu-2\VI-3125a1_A	Digital	PCU-2 INPUT ANALOG OVER OR UNDER RANGE ALARM
PCU-2\VI-3125A2	Analog	PUMP P-3125A BEARING VIBRATION
pcu-2\VI-3125a2_A	Digital	PCU-2 INPUT ANALOG OVER OR UNDER RANGE ALARM
PCU-2\XA-3125A	Digital	BOOSTER PUMP P-3125A FAILURE Y-74.1
PCU-2\YL-3125A3	Digital	LOCAL/REMOTE STATUS FOR P-3125A [ON = REMOTE] OIT
SCREEN_NUMBER	Analog	CURRENT SCREEN NUMBER (1 TO 12)
SECURITY	Analog	PRESENT SECURITY LEVEL
system\DateAndTimeString	String	System date and time string

2.2.10 Graphics\Display\06p3125b

HANFORD CROSS SITE TRANSFER SYSTEM - PCU-2 - BOOSTER PUMP P-3125B

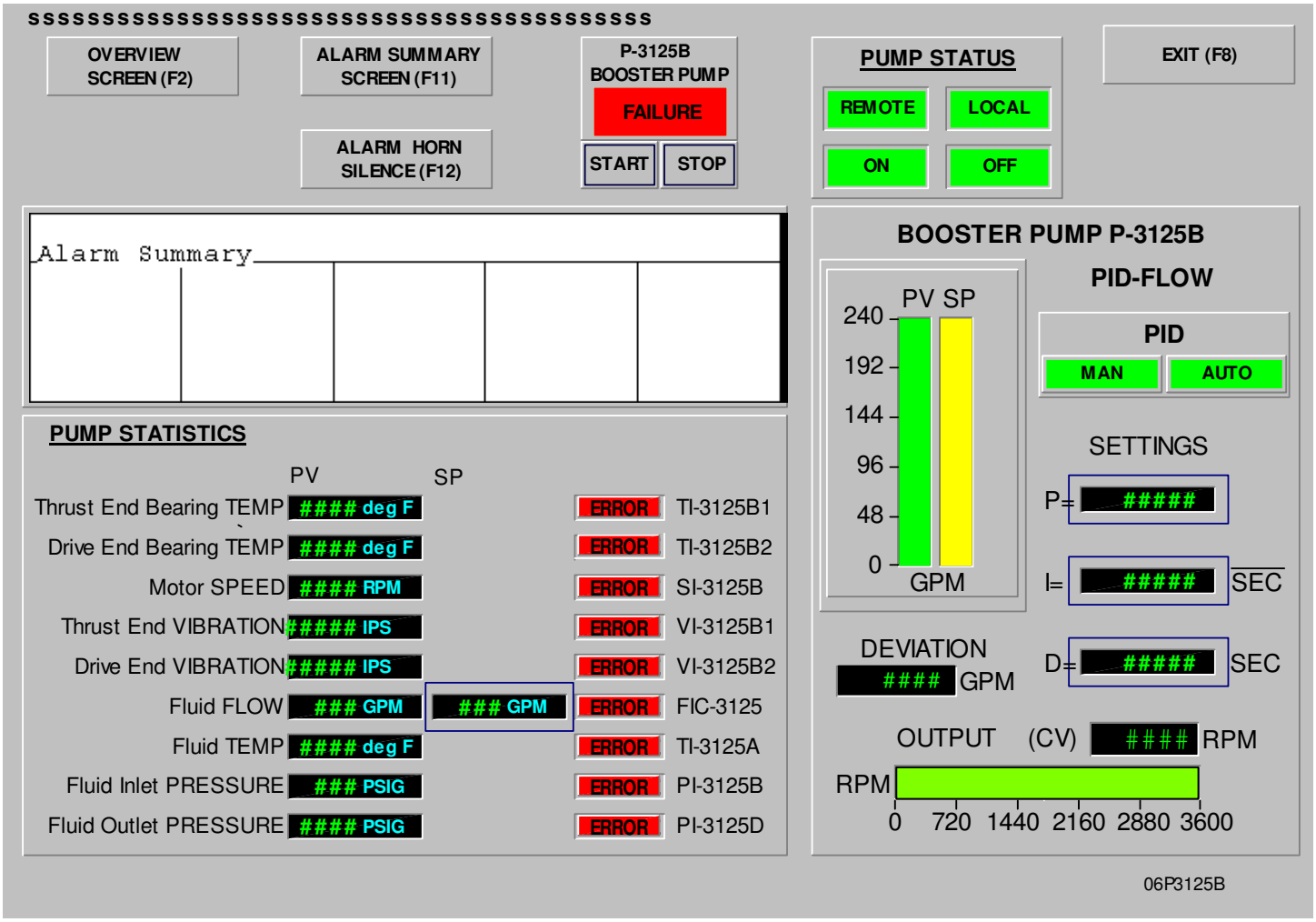

2.2.10.1 Display Settings

Section	Option	Selection
Properties	Display Type	Overlay
	Allow Multiple Running Copies	No
	Cache after Displaying	Yes
	Title Bar	Yes "HANFORD CROSS SITE TRANSFER SYSTEM - PCU-2 - BOOSTER PUMP P-3125B"
	System Menu	No
	Minimize Button	No
	Maximize Button	No
	Size to Main Window at Runtime	Yes
	Show last Acquired Value	Yes
	Use Current Size	No (Size in Pixels: 790 x 551)
	Allow Display to be Resized	No
	Use Current Position	No (Position in Pixels: 0 x 0)
	Security Code	*
	Background Color	0xC0C0C0
Behavior	Startup Command	SCREEN_NUMBER = 6; PB_INDICATOR = 0
	Shutdown Command	
	Input Field Not Selected Text Color	0x0
	Input Field Not Selected Fill Color	0xC0C0C0
	Input Field Selected Text Color	0x0
	Input Field Selected Fill Color	0xC0C0C0
	Beep on Press of Interactive Object	No
	Highlight when Cursor Passes Over Interactive Objects	Yes Highlight Color: 0x0
	Highlight Color of Objects with Input Focus	0x808080
	Display On-screen Keyboard	No

2.2.10.2 Animated Display Objects

Object Name	Grouping	X	Y	Property	Expression
Group4	++Group4	259	320		
NumericDisplay1	|	276	320	Numeric Display	{pcu-2\ti-3125a1}
Group4	+-Group4				
NumericDisplay2		179	320	Numeric Display	{PCU-2\TI-3125B2}
				Numeric Display: Color Control	NOT {PCU-2\TAH-3125B2}
Group7	++Group7	259	344		
NumericDisplay3	|	267	344	Numeric Display	{pcu-2\si-3125a}
Group7	+-Group7				
NumericDisplay4		179	344	Numeric Display	{PCU-2\SI-3125B}
Group10	++Group10	259	368		
NumericDisplay5	|	267	368	Numeric Display	"XX"
Group10	+-Group10				
NumericDisplay6		170	368	Numeric Display	{PCU-2\VI-3125B1} / 100.0
				Numeric Display: Color Control	NOT {PCU-2\VAH-3125B1}
Group13	++Group13	259	392		
NumericDisplay7	|	267	392	Numeric Display	{pcu-2\si-3125a}
Group13	+-Group13				
NumericDisplay8		170	392	Numeric Display	{PCU-2\VI-3125B2} / 100.0
				Numeric Display: Color Control	NOT {PCU-2\VAH-3125B2}
NumericDisplay9		188	416	Numeric Display	{PCU-2\FIC-3125}
Group17	++Group17	259	440		
NumericDisplay10	|	276	440	Numeric Display	{pcu-2\ti-3125a1}
Group17	+-Group17				
NumericDisplay11		179	440	Numeric Display	{PCU-2\TI-3125A}
Group20	++Group20	259	464		
NumericDisplay12	|	276	464	Numeric Display	{pcu-2\pi-3125a}
Group20	+-Group20				
NumericDisplay13		188	464	Numeric Display	{PCU-2\PI-3125B}
				Numeric Display: Color Control	NOT ({PCU-2\PAL-3125B} OR {PCU-2\PAH-3125B})
Group23	++Group23	259	488		
NumericDisplay14	|	276	488	Numeric Display	{pcu-2\pi-3125a}
Group23	+-Group23				
NumericDisplay15		179	488	Numeric Display	{PCU-2\PI-3125D}
				Numeric Display: Color Control	NOT {PCU-2\PAH-3125D}
NumericDisplay16		179	296	Numeric Display	{PCU-2\TI-3125B1}
				Numeric Display: Color Control	NOT {PCU-2\TAH-3125B1}
Group27	++Group27	259	296		
NumericDisplay17	|	269	296	Numeric Display	{pcu-2\ti-3125a2}
Group27	+-Group27				
Group31	++Group31	345	296		
Group30	| ++Group30	347	297		
Group30	| |	347	297	Group: Visibility Control	{PCU-2\TI-3125B1_A}
Group30	| +-Group30				
Group31	+-Group31				
Group35	++Group35	345	319		
Group34	| ++Group34	347	320		
Group34	| |	347	320	Group: Visibility Control	{pcu-2\ti-3125B2_A}
Group34	| +-Group34				
Group35	+-Group35				
Group39	++Group39	345	344		
Group38	| ++Group38	347	345		
Group38	| |	347	345	Group: Visibility Control	{pcu-2\SI-3125B_A}
Group38	| +-Group38				
Group39	+-Group39				
Group43	++Group43	345	368		
Group42	| ++Group42	347	369		
Group42	| |	347	369	Group: Visibility Control	{pcu-2\VI-3125B1_A}
Group42	| +-Group42				
Group43	+-Group43				
Group47	++Group47	345	392		
Group46	| ++Group46	347	393		
Group46	| |	347	393	Group: Visibility Control	{pcu-2\VI-3125B2_A}
Group46	| +-Group46				
Group47	+-Group47				
Group52	++Group52	345	416		
Group51	| ++Group51	347	417		
Group51	| |	347	417	Group: Visibility Control	{pcu-2\FIC-3125_A}
Group51	| +-Group51				
Group52	+-Group52				
Group57	++Group57	345	464		
Group56	| ++Group56	347	465		
Group56	| |	347	465	Group: Visibility Control	{pcu-2\PI-3125b_A}
Group56	| +-Group56				
Group57	+-Group57				
Group62	++Group62	345	488		
Group61	| ++Group61	347	489		
Group61	| |	347	489	Group: Visibility Control	{pcu-2\PI-3125D_A}
Group61	| +-Group61				
Group62	+-Group62				
Group67	++Group67	345	440		
Group66	| ++Group66	347	441		
Group66	| |	347	441	Group: Visibility Control	{pcu-2\TI-3125A_A}
Group66	| +-Group66				
Group67	+-Group67				
Rectangle		541	190	Rectangle: Fill Control	{PCU-2\FIC-3125}

Object Name	Grouping	X	Y	Property	Expression
Rectangle		566	190	Rectangle: Fill Control	{PCU-2\PID-3125-FR}
NumericDisplay18		676	434	Numeric Display	{PCU-2\FIC-3125-O}
NumericDisplay19		531	400	Numeric Display	{PCU-2\FIC-3125-E}
Group75	++Group75	534	434		
Group74	| ++Group74	539	460		
Rectangle	| |	539	460	Rectangle: Fill Control	{PCU-2\FIC-3125-O}
Group74	| +-Group74				
Group75	+-Group75				
Group78	++Group78	702	212		
Rectangle	|	704	214	Rectangle: Visibility Control	{PCU-2\HS-3125-M} <> 1
Group78	+-Group78				
Group80	++Group80	627	212		
Rectangle	|	629	214	Rectangle: Visibility Control	{PCU-2\HS-3125-M} == 1
Group80	+-Group80				
Group83	++Group83	627	212		
Group83	|	627	212	Group: Visibility Control	(SECURITY >= 1) AND (NOT {PCU-2\P-3125A1})
Group81	| ++Group81	627	212		
Group81	| |	627	212	Group: Touch Control: Press Action	PCU-2\HS-3125-M = 1
Group81	| +-Group81				
Group82	| ++Group82	702	212		
Group82	| |	702	212	Group: Touch Control: Press Action	PCU-2\HS-3125-M = 0
Group82	| +-Group82				
Rectangle	|	704	214	Rectangle: Visibility Control	{PCU-2\HS-3125-M} <> 1
Rectangle	|	629	214	Rectangle: Visibility Control	{PCU-2\HS-3125-M} == 1
Group83	+-Group83				
Rectangle		643	284	Rectangle: Color Control	PB_INDICATOR == 4
Group86	++Group86	650	291		
Group85	| ++Group85	650	291		
NumericDisplay20	| |	676	291	Numeric Display	{PCU-2\PID-3125-KP} / 100.0
Group85	| +-Group85				
Rectangle	|	651	292	Rectangle: Touch Control: Press Action	PB_INDICATOR = 4 DISPLAY ENTRY /U /TPCU-2\PID-3125-KP /CB
	|			Rectangle: Visibility Control	(SECURITY >= 2) AND (NOT {PCU-2\P-3125A1})
Group86	+-Group86				
Rectangle		643	333	Rectangle: Color Control	PB_INDICATOR == 5
Rectangle		643	382	Rectangle: Color Control	PB_INDICATOR == 6
Group89	++Group89	650	389		
Group88	| ++Group88	650	389		
NumericDisplay21	| |	676	389	Numeric Display	{PCU-2\PID-3125-KD} / 100.0
Group88	| +-Group88				
Rectangle	|	651	390	Rectangle: Touch Control: Press Action	PB_INDICATOR = 6 DISPLAY ENTRY /U /TPCU-2\PID-3125-KD /CB
	|			Rectangle: Visibility Control	(SECURITY >= 2) AND (NOT {PCU-2\P-3125A1})
Group89	+-Group89				
Group92	++Group92	650	340		
Group91	| ++Group91	650	340		
NumericDisplay22	| |	676	340	Numeric Display	{PCU-2\PID-3125-KI} / 100.0
Group91	| +-Group91				
Rectangle	|	651	341	Rectangle: Touch Control: Press Action	PB_INDICATOR = 5 DISPLAY ENTRY /U /TPCU-2\PID-3125-KI /CB
	|			Rectangle: Visibility Control	(SECURITY >= 2) AND (NOT {PCU-2\P-3125A1})
Group92	+-Group92				
Group94	++Group94	180	76		
Group94	|	180	76	Group: Visibility Control	MAINTENANCE_STATION == 0
	|			Group: Touch Control: Press Action	SilenceAll
Group94	+-Group94				
Group96	++Group96	27	20		
Group96	|	27	20	Group: Touch Control: Press Action	DISPLAY 01OVERVW
Group96	+-Group96				
Rectangle		497	87	Rectangle: Visibility Control	{PCU-2\P-3125B1} == 1
Rectangle		571	52	Rectangle: Visibility Control	{PCU-2\YL-3125B3} == 0
Rectangle		497	52	Rectangle: Visibility Control	{PCU-2\YL-3125B3} == 1
Rectangle		571	87	Rectangle: Visibility Control	{PCU-2\P-3125B1} == 0
Group108	++Group108	397	83		
Group108	|	397	83	Group: Visibility Control	SECURITY >= 1
	|			Group: Touch Control: Press Action	PB_INDICATOR = 2 DISPLAY PB_ACK /U /TPCU-2\HS-3125B2 /CL
Rectangle	|	399	85	Rectangle: Color Control	PB_INDICATOR == 2
Group108	+-Group108				
Group110	++Group110	349	83		
Group110	|	349	83	Group: Touch Control: Press Action	PB_INDICATOR = 1 DISPLAY PB_ACK /U /TPCU-2\HS-3125B1 /CL
	|			Group: Visibility Control	(SECURITY >= 1) AND (NOT {PCU-2\P-3125A1}) AND {PCU-2\YL-3125B3}
Rectangle	|	351	85	Rectangle: Color Control	PB_INDICATOR == 1
Group110	+-Group110				
Group111	++Group111	357	51		
Group111	|	357	51	Group: Visibility Control	{PCU-2\P-3125B2}
Group111	+-Group111				
Group113	++Group113	180	20		
Group113	|	180	20	Group: Touch Control: Press Action	ABORT * Display 03almsmc
	|			Group: Visibility Control	SECURITY >= 1
Group113	+-Group113				
Group115	++Group115	180	20		
Group115	|	180	20	Group: Touch Control: Press Action	Display 03almsmv
	|			Group: Visibility Control	SECURITY >= 1

Object Name	Grouping	X	Y	Property	Expression
Group115	+-Group115				
StringDisplay1		15	0	String Display	system\DateAndTimeString
Group117	++Group117	664	13		
Group117	|	664	13	Group: Touch Control: Press Action	Abort 06p3125b
Group117	+-Group117				
Rectangle		255	409	Rectangle: Color Control	PB_INDICATOR == 3
Group120	++Group120	259	416		
Group119	| ++Group119	259	416		
NumericDisplay23	| |	275	416	Numeric Display	{PCU-2\PID-3125-FR}
Group119	| +-Group119				
Rectangle	|	260	417	Rectangle: Touch Control: Press Action	PB_INDICATOR = 3 DISPLAY ENTRY /U /TPCU-2\PID-3125-FR /CB
	|			Rectangle: Visibility Control	(SECURITY >= 1) AND (NOT {PCU-2\P-3125A1})
Group120	+-Group120				
Group121	++Group121	357	51		
Group121	|	357	51	Group: Visibility Control	{PCU-2\P-3125B1}
Group121	+-Group121				
Group122	++Group122	357	51		
Group122	|	357	51	Group: Visibility Control	(NOT {PCU-2\YL-3125B3})
Group122	+-Group122				
Group123	++Group123	357	51		
Group123	|	357	51	Group: Visibility Control	{PCU-2\XA-3125B}
Group123	+-Group123				
Display Commands		x	x	Startup Command Shutdown Command	SCREEN_NUMBER = 6; PB_INDICATOR = 0

2.2.10.3 Database Tags Used by the Component

Tag Name	Tag Type	Tag Description
MAINTENANCE_STATION	Digital	OIT STATION SELECTION - TRUE=MAINTENANCE, FALSE=OPERATOR
PB_INDICATOR	Analog	VALUE INDICATING THE PUSHBUTTON BEING ACKNOWLEDGED
PCU-2\FIC-3125	Analog	PUMP P-3125 A/B OUTLET FLOW
PCU-2\FIC-3125-E	Analog	PUMP P-3125 A/B PID CONTROL ERROR
PCU-2\FIC-3125-O	Analog	PUMP P-3125 A/B OUTLET FLOW / DRIVE SPEED REF OUTPUT
pcu-2\FIC-3125_A	Digital	PCU-2 INPUT ANALOG OVER OR UNDER RANGE ALARM
PCU-2\HS-3125-M	Digital	PID FOR PUMP P-3125 A/B MANUAL MODE
PCU-2\P-3125A1	Digital	START PUMP P-3125A Y74-1
PCU-2\P-3125B1	Digital	START PUMP P-3125B Y74-2
PCU-2\P-3125B2	Digital	STOP PUMP P-3125B Y74-2
PCU-2\PAH-3125B	Digital	BOOSTER PUMP HIGH INLET PRESSURE Y-75.1
PCU-2\PAH-3125D	Digital	BOOSTER PUMP HIGH DISCHARGE PRESSURE Y-78.1
PCU-2\PAL-3125B	Digital	BOOSTER PUMP LOW INLET PRESSURE Y-74.2
pcu-2\pi-3125a	Analog	PUMP P-3125A INLET PRESSURE
PCU-2\PI-3125B	Analog	PUMP P-3125B INLET PRESSURE
pcu-2\PI-3125b_A	Digital	PCU-2 INPUT ANALOG OVER OR UNDER RANGE ALARM
PCU-2\PI-3125D	Analog	PUMP P-3125B OUTLET PRESSURE
pcu-2\PI-3125D_A	Digital	PCU-2 INPUT ANALOG OVER OR UNDER RANGE ALARM
PCU-2\PID-3125-FR	Analog	PUMP P-3125 A/B OUTLET FLOW REFERENCE FROM OIT
PCU-2\PID-3125-KD	Analog	PUMP P-3125 A/B PID CONTROL DERIV. GAIN FROM OIT
PCU-2\PID-3125-KI	Analog	PUMP P-3125 A/B PID CONTROL INTEG. GAIN FROM OIT
PCU-2\PID-3125-KP	Analog	PUMP P-3125 A/B PID CONTROL PROP. GAIN FROM OIT
pcu-2\si-3125a	Analog	MOTOR SPEED PUMP P-3125A
PCU-2\SI-3125B	Analog	MOTOR SPEED PUMP P-3125B
pcu-2\SI-3125B_A	Digital	PCU-2 INPUT ANALOG OVER OR UNDER RANGE ALARM
PCU-2\TAH-3125B1	Digital	PUMP P-3125B INBOARD BEARING HIGH TEMP. Y-76.1
PCU-2\TAH-3125B2	Digital	PUMP P-3125B OUTBOARD BEARING HIGH TEMP. Y-76.1
PCU-2\TI-3125A	Analog	PUMP P-3125A/B OUTLET FLOW TEMPERATURE WT-SLL-3160
pcu-2\TI-3125A_A	Digital	PCU-2 INPUT THERMOCOUPLE OVER OR UNDER RANGE ALARM
pcu-2\ti-3125a1	Analog	PUMP P-3125A MOTOR BEARING TEMPERATURE
pcu-2\ti-3125a2	Analog	PUMP P-3125A MOTOR BEARING TEMPERATURE
PCU-2\TI-3125B1	Analog	PUMP P-3125B MOTOR BEARING TEMPERATURE
PCU-2\TI-3125B1_A	Digital	PCU-2 INPUT R.T.D. TEMP. OVER OR UNDER RANGE ALARM
PCU-2\TI-3125B2	Analog	PUMP P-3125B MOTOR BEARING TEMPERATURE
pcu-2\ti-3125B2_A	Digital	PCU-2 INPUT R.T.D. TEMP. OVER OR UNDER RANGE ALARM
PCU-2\VAH-3125B1	Digital	PUMP P-3125B HIGH MOTOR VIBRATION Y-76.1
PCU-2\VAH-3125B2	Digital	PUMP P-3125B HIGH MOTOR VIBRATION Y-76.1
PCU-2\VI-3125B1	Analog	PUMP P-3125B BEARING VIBRATION
pcu-2\VI-3125B1_A	Digital	PCU-2 INPUT ANALOG OVER OR UNDER RANGE ALARM
PCU-2\VI-3125B2	Analog	PUMP P-3125B BEARING VIBRATION
pcu-2\VI-3125B2_A	Digital	PCU-2 INPUT ANALOG OVER OR UNDER RANGE ALARM
PCU-2\XA-3125B	Digital	BOOSTER PUMP P-3125B FAILURE Y-74.2
PCU-2\YL-3125B3	Digital	LOCAL/REMOTE STATUS FOR P-3125B [ON = REMOTE] OIT
SCREEN_NUMBER	Analog	CURRENT SCREEN NUMBER (1 TO 12)
SECURITY	Analog	PRESENT SECURITY LEVEL
system\DateAndTimeString	String	System date and time string

2.2.11 Graphics\Display\07draina

HANFORD CROSS SITE TRANSFER SYSTEM - PCU-2 - BOOSTER PUMP P-3125A - DRAIN VALVES

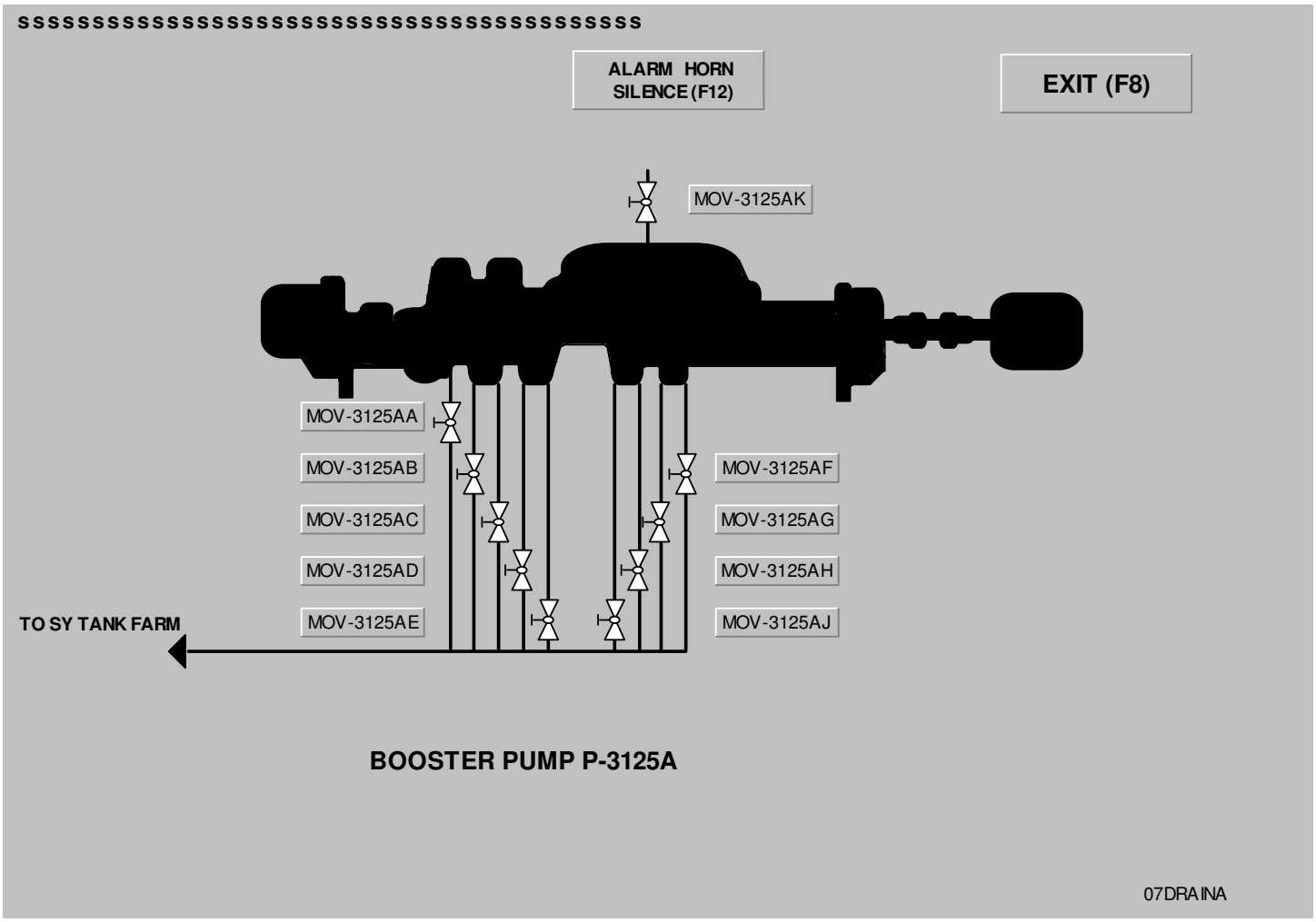

2.2.11.1 Display Settings

Section	Option	Selection
Properties	Display Type	On Top
	Allow Multiple Running Copies	No
	Cache after Displaying	Yes
	Title Bar	Yes "HANFORD CROSS SITE TRANSFER SYSTEM - PCU-2 - BOOSTER PUMP P-3125A - DRAIN VALVES"
	System Menu	No
	Minimize Button	No
	Maximize Button	No
	Size to Main Window at Runtime	Yes
	Show last Acquired Value	Yes
	Use Current Size	No (Size in Pixels: 790 x 551)
	Allow Display to be Resized	No
	Use Current Position	No (Position in Pixels: 0 x 0)
	Security Code	*
	Background Color	0xC0C0C0
Behavior	Startup Command	SCREEN_NUMBER = 7
	Shutdown Command	
	Input Field Not Selected Text Color	0x0
	Input Field Not Selected Fill Color	0xFFFFFF
	Input Field Selected Text Color	0xFFFFFF
	Input Field Selected Fill Color	0x8000
	Beep on Press of Interactive Object	No
	Highlight when Cursor Passes Over Interactive Objects	Yes Highlight Color: 0x0
	Highlight Color of Objects with Input Focus	0x808080
	Display On-screen Keyboard	No

2.2.11.2 Animated Display Objects

Object Name	Grouping	X	Y	Property	Expression
Group2	++Group2	344	28		
Group2	|	344	28	Group: Visibility Control	MAINTENANCE_STATION == 0
	|			Group: Touch Control: Press Action	SilenceAll
Group2	+-Group2				
Group4	++Group4	602	30		
Group4	|	602	30	Group: Touch Control: Press Action	Abort 07draina
Group4	+-Group4				
Group6	++Group6	402	271		
Group6	|	402	271	Group: Color Control	if({PCU-2\0_OFF} OR {PCU-2\0_OFF} OR {PCU-2\0_OFF}) then 2 else if ({PCU-2\ZLH-3125AF} AND NOT {PCU-2\ZLL-3125AF}) then 1 else if ({PCU-2\ZLL-3125AF} AND NOT {PCU-2\ZLH-3125AF}) then 0 else 2
Group6	+-Group6				
Group8	++Group8	430	271		
Group8	|	430	271	Group: Touch Control: Press Action	VALVE_NAME = "MOV-3125AF" DISPLAY MOV-2P-D /PM3125AF /Q4
Group8	+-Group8				
Group10	++Group10	430	302		
Group10	|	430	302	Group: Touch Control: Press Action	VALVE_NAME = "MOV-3125AG" DISPLAY MOV-2P-D /PM3125AG /Q4
Group10	+-Group10				
Group12	++Group12	430	333		
Group12	|	430	333	Group: Touch Control: Press Action	VALVE_NAME = "MOV-3125AH" DISPLAY MOV-2P-D /PM3125AH /Q4
Group12	+-Group12				
Group14	++Group14	430	364		
Group14	|	430	364	Group: Touch Control: Press Action	VALVE_NAME = "MOV-3125AJ" DISPLAY MOV-2P-D /PM3125AJ /Q4
Group14	+-Group14				
Group16	++Group16	180	240		
Group16	|	180	240	Group: Touch Control: Press Action	VALVE_NAME = "MOV-3125AA" DISPLAY MOV-2P-D /PM3125AA /Q4
Group16	+-Group16				
Group18	++Group18	180	271		
Group18	|	180	271	Group: Touch Control: Press Action	VALVE_NAME = "MOV-3125AB" DISPLAY MOV-2P-D /PM3125AB /Q4
Group18	+-Group18				
Group20	++Group20	180	302		
Group20	|	180	302	Group: Touch Control: Press Action	VALVE_NAME = "MOV-3125AC" DISPLAY MOV-2P-D /PM3125AC /Q4
Group20	+-Group20				
Group22	++Group22	180	333		
Group22	|	180	333	Group: Touch Control: Press Action	VALVE_NAME = "MOV-3125AD" DISPLAY MOV-2P-D /PM3125AD /Q4
Group22	+-Group22				
Group24	++Group24	180	364		
Group24	|	180	364	Group: Touch Control: Press Action	VALVE_NAME = "MOV-3125AE" DISPLAY MOV-2P-D /PM3125AE /Q4
Group24	+-Group24				
Group26	++Group26	414	109		
Group26	|	414	109	Group: Touch Control: Press Action	VALVE_NAME = "MOV-3125AK" DISPLAY MOV-2P-D /PM3125AK /Q4
Group26	+-Group26				
Group27	++Group27	386	300		
Group27	|	386	300	Group: Color Control	if({PCU-2\0_OFF} OR {PCU-2\0_OFF} OR {PCU-2\0_OFF}) then 2 else if ({PCU-2\ZLH-3125AG} AND NOT {PCU-2\ZLL-3125AG}) then 1 else if ({PCU-2\ZLL-3125AG} AND NOT {PCU-2\ZLH-3125AG}) then 0 else 2
Group27	+-Group27				
Group28	++Group28	373	329		
Group28	|	373	329	Group: Color Control	if({PCU-2\0_OFF} OR {PCU-2\0_OFF} OR {PCU-2\0_OFF}) then 2 else if ({PCU-2\ZLH-3125AH} AND NOT {PCU-2\ZLL-3125AH}) then 1 else if ({PCU-2\ZLL-3125AH} AND NOT {PCU-2\ZLH-3125AH}) then 0 else 2
Group28	+-Group28				
Group29	++Group29	359	359		
Group29	|	359	359	Group: Color Control	if({PCU-2\0_OFF} OR {PCU-2\0_OFF} OR {PCU-2\0_OFF}) then 2 else if ({PCU-2\ZLH-3125AJ} AND NOT {PCU-2\ZLL-3125AJ}) then 1 else if ({PCU-2\ZLL-3125AJ} AND NOT {PCU-2\ZLH-3125AJ}) then 0 else 2
Group29	+-Group29				
Group30	++Group30	378	107		
Group30	|	378	107	Group: Color Control	if({PCU-2\0_OFF} OR {PCU-2\0_OFF} OR {PCU-2\0_OFF}) then 2 else if ({PCU-2\ZLH-3125AK} AND NOT {PCU-2\ZLL-3125AK}) then 1 else if ({PCU-2\ZLL-3125AK} AND NOT {PCU-2\ZLH-3125AK}) then 0 else 2
Group30	+-Group30				
Group31	++Group31	260	240		
Group31	|	260	240	Group: Color Control	if({PCU-2\0_OFF} OR {PCU-2\0_OFF} OR {PCU-2\0_OFF}) then 2 else if ({PCU-2\ZLH-3125AA} AND NOT {PCU-2\ZLL-3125AA}) then 1 else if ({PCU-2\ZLL-3125AA} AND NOT {PCU-2\ZLH-3125AA}) then 0 else 2
Group31	+-Group31				
Group32	++Group32	274	271		
Group32	|	274	271	Group: Color Control	if({PCU-2\0_OFF} OR {PCU-2\0_OFF} OR {PCU-2\0_OFF}) then 2 else if ({PCU-2\ZLH-3125AB} AND NOT {PCU-2\ZLL-3125AB}) then 1 else if ({PCU-2\ZLL-3125AB} AND NOT {PCU-2\ZLH-3125AB}) then 0 else 2

Object Name	Grouping	X	Y	Property	Expression
Group32	+-Group32				
Group33	++Group33	289	300		
Group33	|	289	300	Group: Color Control	if({PCU-2\0_OFF} OR {PCU-2\0_OFF} OR {PCU-2\0_OFF}) then 2 else if ({PCU-2\ZLH-3125AC} AND NOT {PCU-2\ZLL-3125AC}) then 1 else if ({PCU-2\ZLL-3125AC} AND NOT {PCU-2\ZLH-3125AC}) then 0 else 2
Group33	+-Group33				
Group34	++Group34	303	329		
Group34	|	303	329	Group: Color Control	if({PCU-2\0_OFF} OR {PCU-2\0_OFF} OR {PCU-2\0_OFF}) then 2 else if ({PCU-2\ZLH-3125AD} AND NOT {PCU-2\ZLL-3125AD}) then 1 else if ({PCU-2\ZLL-3125AD} AND NOT {PCU-2\ZLH-3125AD}) then 0 else 2
Group34	+-Group34				
Group35	++Group35	319	359		
Group35	|	319	359	Group: Color Control	if({PCU-2\0_OFF} OR {PCU-2\0_OFF} OR {PCU-2\0_OFF}) then 2 else if ({PCU-2\ZLH-3125AE} AND NOT {PCU-2\ZLL-3125AE}) then 1 else if ({PCU-2\ZLL-3125AE} AND NOT {PCU-2\ZLH-3125AE}) then 0 else 2
Group35	+-Group35				
StringDisplay1		9	2	String Display	system\DateAndTimeString
Display Commands		x	x	Startup Command Shutdown Command	SCREEN_NUMBER = 7

2.2.11.3 Database Tags Used by the Component

Tag Name	Tag Type	Tag Description
MAINTENANCE_STATION	Digital	OIT STATION SELECTION - TRUE=MAINTENANCE, FALSE=OPERATOR
PCU-2\0_OFF	Digital	ALWAYS OFF PLACE HOLDER FOR PCU-2 VARIABLES
PCU-2\ZLH-3125AA	Digital	MOV-3125AA IS OPEN Y79-1
PCU-2\ZLH-3125AB	Digital	MOV-3125AB IS OPEN Y79-1
PCU-2\ZLH-3125AC	Digital	MOV-3125AC IS OPEN Y79-1
PCU-2\ZLH-3125AD	Digital	MOV-3125AD IS OPEN Y79-1
PCU-2\ZLH-3125AE	Digital	MOV-3125AE IS OPEN Y79-1
PCU-2\ZLH-3125AF	Digital	MOV-3125AF IS OPEN Y79-1
PCU-2\ZLH-3125AG	Digital	MOV-3125AG IS OPEN Y79-1
PCU-2\ZLH-3125AH	Digital	MOV-3125AH IS OPEN Y79-1
PCU-2\ZLH-3125AJ	Digital	MOV-3125AJ IS OPEN Y79-2
PCU-2\ZLH-3125AK	Digital	MOV-3125AK IS OPEN Y79-2
PCU-2\ZLL-3125AA	Digital	MOV-3125AA IS CLOSED Y80-1
PCU-2\ZLL-3125AB	Digital	MOV-3125AB IS CLOSED Y80-1
PCU-2\ZLL-3125AC	Digital	MOV-3125AC IS CLOSED Y80-1
PCU-2\ZLL-3125AD	Digital	MOV-3125AD IS CLOSED Y80-1
PCU-2\ZLL-3125AE	Digital	MOV-3125AE IS CLOSED Y80-1
PCU-2\ZLL-3125AF	Digital	MOV-3125AF IS CLOSED Y80-1
PCU-2\ZLL-3125AG	Digital	MOV-3125AG IS CLOSED Y80-1
PCU-2\ZLL-3125AH	Digital	MOV-3125AH IS CLOSED Y80-1
PCU-2\ZLL-3125AJ	Digital	MOV-3125AJ IS CLOSED Y80-2
PCU-2\ZLL-3125AK	Digital	MOV-3125AK IS CLOSED Y80-2
SCREEN_NUMBER	Analog	CURRENT SCREEN NUMBER (1 TO 12)
system\DateAndTimeString	String	System date and time string
VALVE_NAME	String	VALVE NAME FOR DISPLAY IN THE VALVE POP-UPS

2.2.12 Graphics\Display\08drainb

HANFORD CROSS SITE TRANSFER SYSTEM - PCU-2 - BOOSTER PUMP P-3125B - DRAIN VALVES

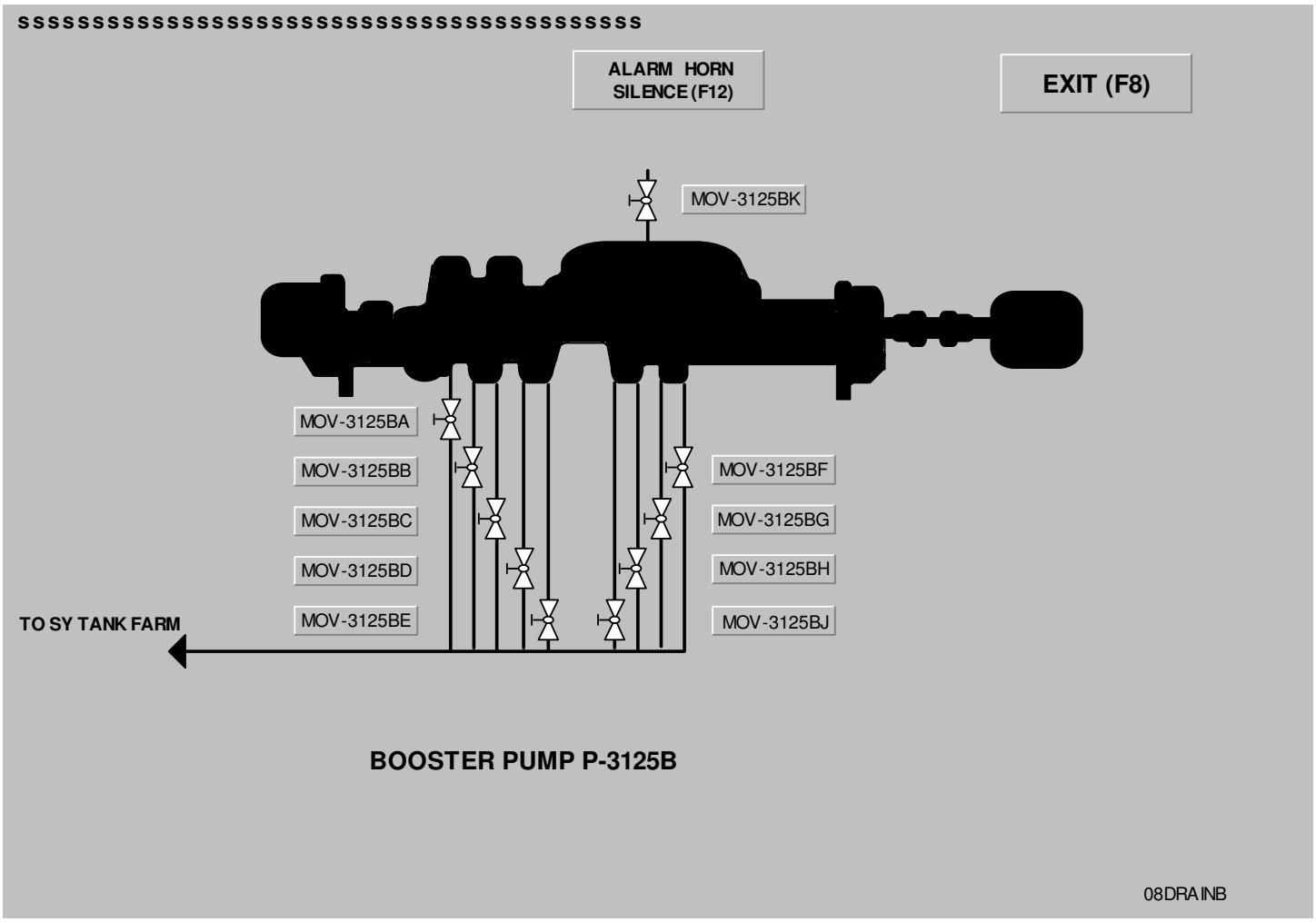

2.2.12.1 Display Settings

Section	Option	Selection
Properties	Display Type	On Top
	Allow Multiple Running Copies	No
	Cache after Displaying	Yes
	Title Bar	Yes "HANFORD CROSS SITE TRANSFER SYSTEM - PCU-2 - BOOSTER PUMP P-3125B - DRAIN VALVES"
	System Menu	No
	Minimize Button	No
	Maximize Button	No
	Size to Main Window at Runtime	Yes
	Show last Acquired Value	Yes
	Use Current Size	No (Size in Pixels: 790 x 551)
	Allow Display to be Resized	No
	Use Current Position	No (Position in Pixels: 0 x 0)
	Security Code	*
	Background Color	0xC0C0C0
Behavior	Startup Command	SCREEN_NUMBER = 8
	Shutdown Command	
	Input Field Not Selected Text Color	0x0
	Input Field Not Selected Fill Color	0xFFFFFF
	Input Field Selected Text Color	0xFFFFFF
	Input Field Selected Fill Color	0x8000
	Beep on Press of Interactive Object	No
	Highlight when Cursor Passes Over Interactive Objects	Yes Highlight Color: 0x0
	Highlight Color of Objects with Input Focus	0x808080
	Display On-screen Keyboard	No

2.2.12.2 Animated Display Objects

Object Name	Grouping	X	Y	Property	Expression
Group2	++Group2	344	28		
Group2	|	344	28	Group: Visibility Control	MAINTENANCE_STATION == 0
	|			Group: Touch Control: Press Action	SilenceAll
Group2	+-Group2				
Group4	++Group4	602	30		
Group4	|	602	30	Group: Touch Control: Press Action	Abort 08drainb
Group4	+-Group4				
Group7	++Group7	410	109		
Group7	|	410	109	Group: Touch Control: Press Action	VALVE_NAME = "MOV-3125BK" DISPLAY MOV-2P-D /PM3125BK /Q4
Group7	+-Group7				
Group9	++Group9	428	363		
Group9	|	428	363	Group: Touch Control: Press Action	VALVE_NAME = "MOV-3125BJ" DISPLAY MOV-2P-D /PM3125BJ /Q4
Group9	+-Group9				
Group11	++Group11	428	332		
Group11	|	428	332	Group: Touch Control: Press Action	VALVE_NAME = "MOV-3125BH" DISPLAY MOV-2P-D /PM3125BH /Q4
Group11	+-Group11				
Group13	++Group13	428	302		
Group13	|	428	302	Group: Touch Control: Press Action	VALVE_NAME = "MOV-3125BG" DISPLAY MOV-2P-D /PM3125BG /Q4
Group13	+-Group13				
Group15	++Group15	428	272		
Group15	|	428	272	Group: Touch Control: Press Action	VALVE_NAME = "MOV-3125BF" DISPLAY MOV-2P-D /PM3125BF /Q4
Group15	+-Group15				
Group17	++Group17	176	243		
Group17	|	176	243	Group: Touch Control: Press Action	VALVE_NAME = "MOV-3125BA" DISPLAY MOV-2P-D /PM3125BA /Q4
Group17	+-Group17				
Group19	++Group19	176	273		
Group19	|	176	273	Group: Touch Control: Press Action	VALVE_NAME = "MOV-3125BB" DISPLAY MOV-2P-D /PM3125BB /Q4
Group19	+-Group19				
Group21	++Group21	176	303		
Group21	|	176	303	Group: Touch Control: Press Action	VALVE_NAME = "MOV-3125BC" DISPLAY MOV-2P-D /PM3125BC /Q4
Group21	+-Group21				
Group23	++Group23	176	333		
Group23	|	176	333	Group: Touch Control: Press Action	VALVE_NAME = "MOV-3125BD" DISPLAY MOV-2P-D /PM3125BD /Q4
Group23	+-Group23				
Group25	++Group25	176	363		
Group25	|	176	363	Group: Touch Control: Press Action	VALVE_NAME = "MOV-3125BE" DISPLAY MOV-2P-D /PM3125BE /Q4
Group25	+-Group25				
Group26	++Group26	378	106		
Group26	|	378	106	Group: Color Control	if({PCU-2\0_OFF} OR {PCU-2\0_OFF} OR {PCU-2\0_OFF}) then 2 else if ({PCU-2\ZLH-3125BK} AND NOT {PCU-2\ZLL-3125BK}) then 1 else if ({PCU-2\ZLL-3125BK} AND NOT {PCU-2\ZLH-3125BK}) then 0 else 2
Group26	+-Group26				
Group27	++Group27	260	238		
Group27	|	260	238	Group: Color Control	if({PCU-2\0_OFF} OR {PCU-2\0_OFF} OR {PCU-2\0_OFF}) then 2 else if ({PCU-2\ZLH-3125BA} AND NOT {PCU-2\ZLL-3125BA}) then 1 else if ({PCU-2\ZLL-3125BA} AND NOT {PCU-2\ZLH-3125BA}) then 0 else 2
Group27	+-Group27				
Group28	++Group28	273	267		
Group28	|	273	267	Group: Color Control	if({PCU-2\0_OFF} OR {PCU-2\0_OFF} OR {PCU-2\0_OFF}) then 2 else if ({PCU-2\ZLH-3125BB} AND NOT {PCU-2\ZLL-3125BB}) then 1 else if ({PCU-2\ZLL-3125BB} AND NOT {PCU-2\ZLH-3125BB}) then 0 else 2
Group28	+-Group28				
Group29	++Group29	287	298		
Group29	|	287	298	Group: Color Control	if({PCU-2\0_OFF} OR {PCU-2\0_OFF} OR {PCU-2\0_OFF}) then 2 else if ({PCU-2\ZLH-3125BC} AND NOT {PCU-2\ZLL-3125BC}) then 1 else if ({PCU-2\ZLL-3125BC} AND NOT {PCU-2\ZLH-3125BC}) then 0 else 2
Group29	+-Group29				
Group30	++Group30	304	328		
Group30	|	304	328	Group: Color Control	if({PCU-2\0_OFF} OR {PCU-2\0_OFF} OR {PCU-2\0_OFF}) then 2 else if ({PCU-2\ZLH-3125BD} AND NOT {PCU-2\ZLL-3125BD}) then 1 else if ({PCU-2\ZLL-3125BD} AND NOT {PCU-2\ZLH-3125BD}) then 0 else 2
Group30	+-Group30				
Group31	++Group31	319	359		
Group31	|	319	359	Group: Color Control	if({PCU-2\0_OFF} OR {PCU-2\0_OFF} OR {PCU-2\0_OFF}) then 2 else if ({PCU-2\ZLH-3125BE} AND NOT {PCU-2\ZLL-3125BE}) then 1 else if ({PCU-2\ZLL-3125BE} AND NOT {PCU-2\ZLH-3125BE}) then 0 else 2
Group31	+-Group31				
Group32	++Group32	359	359		
Group32	|	359	359	Group: Color Control	if({PCU-2\0_OFF} OR {PCU-2\0_OFF} OR {PCU-2\0_OFF}) then 2 else if ({PCU-2\ZLH-3125BJ} AND NOT {PCU-2\ZLL-3125BJ}) then 1 else if ({PCU-2\ZLL-3125BJ} AND NOT {PCU-2\ZLH-3125BJ}) then 0 else 2

Object Name	Grouping	X	Y	Property	Expression
Group32	+-Group32				
Group33	++Group33	372	328		
Group33	|	372	328	Group: Color Control	if({PCU-2\0_OFF} OR {PCU-2\0_OFF} OR {PCU-2\0_OFF}) then 2 else if ({PCU-2\ZLH-3125BH} AND NOT {PCU-2\ZLL-3125BH}) then 1 else if ({PCU-2\ZLL-3125BH} AND NOT {PCU-2\ZLH-3125BH}) then 0 else 2
Group33	+-Group33				
Group34	++Group34	387	298		
Group34	|	387	298	Group: Color Control	if({PCU-2\0_OFF} OR {PCU-2\0_OFF} OR {PCU-2\0_OFF}) then 2 else if ({PCU-2\ZLH-3125BG} AND NOT {PCU-2\ZLL-3125BG}) then 1 else if ({PCU-2\ZLL-3125BG} AND NOT {PCU-2\ZLH-3125BG}) then 0 else 2
Group34	+-Group34				
Group35	++Group35	400	267		
Group35	|	400	267	Group: Color Control	if({PCU-2\0_OFF} OR {PCU-2\0_OFF} OR {PCU-2\0_OFF}) then 2 else if ({PCU-2\ZLH-3125BF} AND NOT {PCU-2\ZLL-3125BF}) then 1 else if ({PCU-2\ZLL-3125BF} AND NOT {PCU-2\ZLH-3125BF}) then 0 else 2
Group35	+-Group35				
StringDisplay1		9	2	String Display	system\DateAndTimeString
Display Commands		x	x	Startup Command	SCREEN_NUMBER = 8
				Shutdown Command	

2.2.12.3 Database Tags Used by the Component

Tag Name	Tag Type	Tag Description
MAINTENANCE_STATION	Digital	OIT STATION SELECTION - TRUE=MAINTENANCE, FALSE=OPERATOR
PCU-2\0_OFF	Digital	ALWAYS OFF PLACE HOLDER FOR PCU-2 VARIABLES
PCU-2\ZLH-3125BA	Digital	MOV-3125BA IS OPEN Y80-1
PCU-2\ZLH-3125BB	Digital	MOV-3125BB IS OPEN Y80-1
PCU-2\ZLH-3125BC	Digital	MOV-3125BC IS OPEN Y80-1
PCU-2\ZLH-3125BD	Digital	MOV-3125BD IS OPEN Y80-1
PCU-2\ZLH-3125BE	Digital	MOV-3125BE IS OPEN Y80-1
PCU-2\ZLH-3125BF	Digital	MOV-3125BF IS OPEN Y80-1
PCU-2\ZLH-3125BG	Digital	MOV-3125BG IS OPEN Y80-1
PCU-2\ZLH-3125BH	Digital	MOV-3125BH IS OPEN Y80-1
PCU-2\ZLH-3125BJ	Digital	MOV-3125BJ IS OPEN Y81-2
PCU-2\ZLH-3125BK	Digital	MOV-3125BK IS OPEN Y81-2
PCU-2\ZLL-3125BA	Digital	MOV-3125BA IS CLOSED Y81-1
PCU-2\ZLL-3125BB	Digital	MOV-3125BB IS CLOSED Y81-1
PCU-2\ZLL-3125BC	Digital	MOV-3125BC IS CLOSED Y81-1
PCU-2\ZLL-3125BD	Digital	MOV-3125BD IS CLOSED Y81-1
PCU-2\ZLL-3125BE	Digital	MOV-3125BE IS CLOSED Y81-1
PCU-2\ZLL-3125BF	Digital	MOV-3125BF IS CLOSED Y81-1
PCU-2\ZLL-3125BG	Digital	MOV-3125BG IS CLOSED Y81-1
PCU-2\ZLL-3125BH	Digital	MOV-3125BH IS CLOSED Y81-1
PCU-2\ZLL-3125BJ	Digital	MOV-3125BJ IS CLOSED Y81-2
PCU-2\ZLL-3125BK	Digital	MOV-3125BK IS CLOSED Y81-2
SCREEN_NUMBER	Analog	CURRENT SCREEN NUMBER (1 TO 12)
system\DateAndTimeString	String	System date and time string
VALVE_NAME	String	VALVE NAME FOR DISPLAY IN THE VALVE POP-UPS

2.2.13 Graphics\Display\09ventsn

HANFORD CROSS SITE TRANSFER SYSTEM - PCU-3 - VENT STATION 6241-V

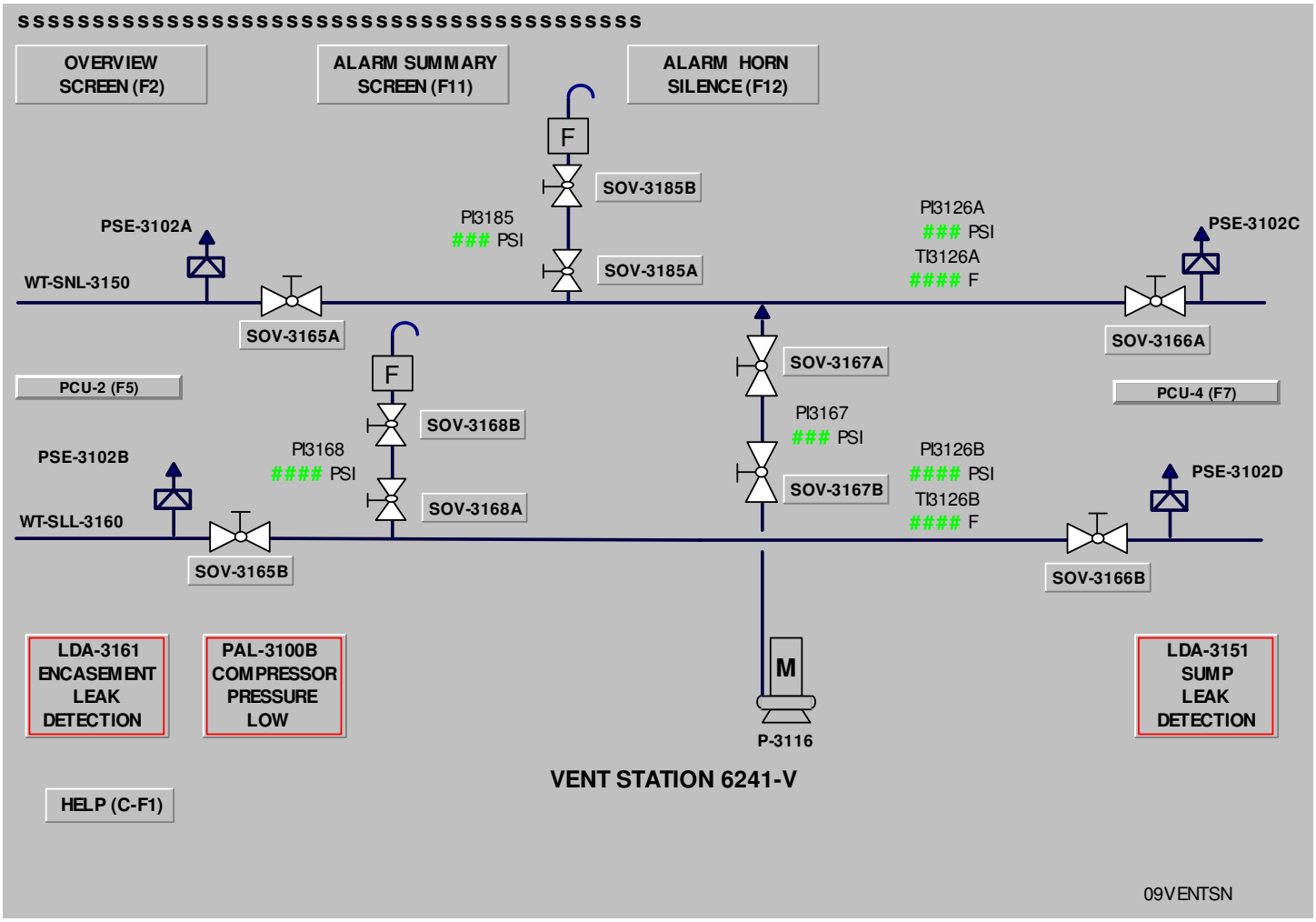

2.2.13.1 Display Settings

Section	Option	Selection
Properties	Display Type	Replace
	Allow Multiple Running Copies	No
	Cache after Displaying	Yes
	Title Bar	Yes "HANFORD CROSS SITE TRANSFER SYSTEM - PCU-3 - VENT STATION 6241-V"
	System Menu	No
	Minimize Button	No
	Maximize Button	No
	Size to Main Window at Runtime	Yes
	Show last Acquired Value	Yes
	Use Current Size	No (Size in Pixels: 790 x 551)
	Allow Display to be Resized	No
	Use Current Position	No (Position in Pixels: 0 x 0)
	Security Code	*
	Background Color	0xC0C0C0
Behavior	Startup Command	SCREEN_NUMBER = 9
	Shutdown Command	
	Input Field Not Selected Text Color	0x0
	Input Field Not Selected Fill Color	0xFFFFFF
	Input Field Selected Text Color	0xFFFFFF
	Input Field Selected Fill Color	0x8000
	Beep on Press of Interactive Object	No
	Highlight when Cursor Passes Over Interactive Objects	Yes Highlight Color: 0x0
	Highlight Color of Objects with Input Focus	0x808080
	Display On-screen Keyboard	No

2.2.13.2 Animated Display Objects

Object Name	Grouping	X	Y	Property	Expression
Group2	++Group2	14	380		
Group2	|	14	380	Group: Color Control	{PCU-3\LDA-3161}
Group2	+-Group2				
Group4	++Group4	8	25		
Group4	|	8	25	Group: Touch Control: Press Action	DISPLAY 01OVERVW
Group4	+-Group4				
Group6	++Group6	377	25		
Group6	|	377	25	Group: Visibility Control	MAINTENANCE_STATION == 0
	|			Group: Touch Control: Press Action	SilenceAll
Group6	+-Group6				
Group14	++Group14	683	380		
Group14	|	683	380	Group: Color Control	{PCU-3\LDA-3151}
Group14	+-Group14				
Group16	++Group16	112	333		
Group16	|	112	333	Group: Touch Control: Press Action	VALVE_NAME = "SOV-3165B" DISPLAY SOV-2POS /PS3165B /Q4
Group16	+-Group16				
Group18	++Group18	143	191		
Group18	|	143	191	Group: Touch Control: Press Action	VALVE_NAME = "SOV-3165A" DISPLAY SOV-2POS /PS3165A /Q4
Group18	+-Group18				
NumericDisplay1		271	135	Numeric Display	{PCU-3\PI-3185}
				Numeric Display: Color Control	NOT ({PCU-3\PI-3185_A} OR {PCU-3\PAH-3185})
Group19	++Group19	156	164		
Group19	|	156	164	Group: Color Control	if({PCU-3\ZA-3165A} OR {PCU-3\ZA-3165A1} OR {PCU-3\ZA-3165A2}) then 2 else if ({PCU-3\ZLH-3165A}) then 1 else if ({PCU-3\ZLL-3165A}) then 0 else 2
Group19	+-Group19				
Group21	++Group21	471	207		
Group21	|	471	207	Group: Touch Control: Press Action	VALVE_NAME = "SOV-3167A" DISPLAY SOV-2POS /PS3167A /Q3
Group21	+-Group21				
Group23	++Group23	471	284		
Group23	|	471	284	Group: Touch Control: Press Action	VALVE_NAME = "SOV-3167B" DISPLAY SOV-2POS /PS3167B /Q3
Group23	+-Group23				
NumericDisplay2		476	254	Numeric Display	{PCU-3\PI-3167}
				Numeric Display: Color Control	NOT ({PCU-3\PI-3167_A} OR {PCU-3\PAH-3167})
Group24	++Group24	443	200		
Group24	|	443	200	Group: Color Control	if({PCU-3\ZA-3167A} OR {PCU-3\ZA-3167A1} OR {PCU-3\ZA-3167A2}) then 2 else if ({PCU-3\ZLH-3167A}) then 1 else if ({PCU-3\ZLL-3167A}) then 0 else 2
Group24	+-Group24				
Group27	++Group27	629	337		
Group27	|	629	337	Group: Touch Control: Press Action	VALVE_NAME = "SOV-3166B" DISPLAY SOV-2POS /PS3166B /Q3
Group27	+-Group27				
NumericDisplay3		547	305	Numeric Display	{PCU-3\TI-3126B}
				Numeric Display: Color Control	NOT {PCU-3\TI-3126B_A}
NumericDisplay4		547	276	Numeric Display	{PCU-3\PI-3126B}
				Numeric Display: Color Control	NOT {PCU-3\PI-3126B_A}
NumericDisplay5		547	159	Numeric Display	{PCU-3\TI-3126A}
				Numeric Display: Color Control	NOT {PCU-3\TI-3126A_A}
NumericDisplay6		555	130	Numeric Display	{PCU-3\PI-3126A}
				Numeric Display: Color Control	NOT {PCU-3\PI-3126A_A}
Group29	++Group29	665	194		
Group29	|	665	194	Group: Touch Control: Press Action	VALVE_NAME = "SOV-3166A" DISPLAY SOV-2POS /PS3166A /Q3
Group29	+-Group29				
Group31	++Group31	252	245		
Group31	|	252	245	Group: Touch Control: Press Action	VALVE_NAME = "SOV-3168B" DISPLAY SOV-2POS /PS3168B /Q4
Group31	+-Group31				
Group33	++Group33	253	295		
Group33	|	253	295	Group: Touch Control: Press Action	VALVE_NAME = "SOV-3168A" DISPLAY SOV-2POS /PS3168A /Q4
Group33	+-Group33				
NumericDisplay7		162	276	Numeric Display	{PCU-3\PI-3168}
				Numeric Display: Color Control	NOT ({PCU-3\PI-3168_A} OR {PCU-3\PAH-3168})
Group34	++Group34	326	97		
Group34	|	326	97	Group: Color Control	if({PCU-3\ZA-3185B} OR {PCU-3\ZA-3185B1} OR {PCU-3\ZA-3185B2}) then 2 else if ({PCU-3\ZLH-3185B}) then 1 else if ({PCU-3\ZLL-3185B}) then 0 else 2
Group34	+-Group34				
Group35	++Group35	326	148		
Group35	|	326	148	Group: Color Control	if({PCU-3\ZA-3185A} OR {PCU-3\ZA-3185A1} OR {PCU-3\ZA-3185A2}) then 2 else if ({PCU-3\ZLH-3185A}) then 1 else if ({PCU-3\ZLL-3185A}) then 0 else 2
Group35	+-Group35				
Group37	++Group37	358	102		

Object Name	Grouping	X	Y	Property	Expression
Group37	|	358	102	Group: Touch Control: Press Action	VALVE_NAME = "SOV-3185B" DISPLAY SOV-2POS /PS3185B /Q4
Group37	+-Group37				
Group39	++Group39	359	152		
Group39	|	359	152	Group: Touch Control: Press Action	VALVE_NAME = "SOV-3185A" DISPLAY SOV-2POS /PS3185A /Q4
Group39	+-Group39				
Group40	++Group40	677	164		
Group40	|	677	164	Group: Color Control	if({PCU-3\ZA-3166A} OR {PCU-3\ZA-3166A1} OR {PCU-3\ZA-3166A2}) then 2 else if ({PCU-3\ZLH-3166A}) then 1 else if ({PCU-3\ZLL-3166A}) then 0 else 2
Group40	+-Group40				
Group41	++Group41	443	264		
Group41	|	443	264	Group: Color Control	if({PCU-3\ZA-3167B} OR {PCU-3\ZA-3167B1} OR {PCU-3\ZA-3167B2}) then 2 else if ({PCU-3\ZLH-3167B}) then 1 else if ({PCU-3\ZLL-3167B}) then 0 else 2
Group41	+-Group41				
Group42	++Group42	642	307		
Group42	|	642	307	Group: Color Control	if({PCU-3\ZA-3166B} OR {PCU-3\ZA-3166B1} OR {PCU-3\ZA-3166B2}) then 2 else if ({PCU-3\ZLH-3166B}) then 1 else if ({PCU-3\ZLL-3166B}) then 0 else 2
Group42	+-Group42				
Group43	++Group43	125	306		
Group43	|	125	306	Group: Color Control	if({PCU-3\ZA-3165B} OR {PCU-3\ZA-3165B1} OR {PCU-3\ZA-3165B2}) then 2 else if ({PCU-3\ZLH-3165B}) then 1 else if ({PCU-3\ZLL-3165B}) then 0 else 2
Group43	+-Group43				
Group44	++Group44	220	241		
Group44	|	220	241	Group: Color Control	if({PCU-3\ZA-3168B} OR {PCU-3\ZA-3168B1} OR {PCU-3\ZA-3168B2}) then 2 else if ({PCU-3\ZLH-3168B}) then 1 else if ({PCU-3\ZLL-3168B}) then 0 else 2
Group44	+-Group44				
Group45	++Group45	220	286		
Group45	|	220	286	Group: Color Control	if({PCU-3\ZA-3168A} OR {PCU-3\ZA-3168A1} OR {PCU-3\ZA-3168A2}) then 2 else if ({PCU-3\ZLH-3168A}) then 1 else if ({PCU-3\ZLL-3168A}) then 0 else 2
Group45	+-Group45				
Group47	++Group47	26	473		
Group47	|	26	473	Group: Touch Control: Press Action	ABORT Display 02help
Group46	| ++Group46	26	473		
Group46	| |	26	473	Group: Touch Control: Press Action	Abort Display 02HELP
Group46	| +-Group46				
Group47	+-Group47				
StringDisplay1		9	2	String Display	system\DateAndTimeString
Group49	++Group49	190	25		
Group49	|	190	25	Group: Touch Control: Press Action	ABORT * Display 03almsmc
	|			Group: Visibility Control	SECURITY >= 1
Group49	+-Group49				
Group51	++Group51	190	25		
Group51	|	190	25	Group: Touch Control: Press Action	Display 03almsmv
	|			Group: Visibility Control	SECURITY >= 1
Group51	+-Group51				
Group53	++Group53	121	380		
Group53	|	121	380	Group: Color Control	{PCU-3\PAL-3100B}
Group53	+-Group53				
Button5		8	224	Button: "PCU-2 (F5)": Touch Control: Release Action	Display 04divbox
Button1		670	227	Button: "PCU-4 (F7)": Touch Control: Release Action	Display 10LIFTSN
Display Commands		x	x	Startup Command Shutdown Command	SCREEN_NUMBER = 9

2.2.13.3 Database Tags Used by the Component

Tag Name	Tag Type	Tag Description
MAINTENANCE_STATION	Digital	OIT STATION SELECTION - TRUE=MAINTENANCE, FALSE=OPERATOR
PCU-3\LDA-3151	Digital	LEAK DETECTED AT VENT STATION 6241-V SUMP Y-72.1
PCU-3\LDA-3161	Digital	6241-V ENCASEMENT LEAK DETECTION [OFF = ALARM] Y72
PCU-3\PAH-3167	Digital	VALVE SOV-3167A/B FAILURE Y73
PCU-3\PAH-3168	Digital	VALVE SOV-3168A/B FAILURE Y73
PCU-3\PAH-3185	Digital	VALVE SOV-3185A/B FAILURE Y73
PCU-3\PAL-3100B	Digital	LOW COMPRESSOR SA-CMP-3101B PRESSURE
PCU-3\PI-3126A	Analog	LOSS OF VACUUM WT-SNL-3150
PCU-3\PI-3126A_A	Digital	PCU-3 INPUT ANALOG OVER OR UNDER RANGE ALARM
PCU-3\PI-3126B	Analog	LOSS OF VACUUM WT-SLL-3160
PCU-3\PI-3126B_A	Digital	PCU-3 INPUT ANALOG OVER OR UNDER RANGE ALARM
PCU-3\PI-3167	Analog	VALVE SOV-3167A/B PRESSURE
PCU-3\PI-3167_A	Digital	PCU-3 INPUT ANALOG OVER OR UNDER RANGE ALARM
PCU-3\PI-3168	Analog	VALVE SOV-3168A/B PRESSURE
PCU-3\PI-3168_A	Digital	PCU-3 INPUT ANALOG OVER OR UNDER RANGE ALARM
PCU-3\PI-3185	Analog	VALVE SOV-3185A/B PRESSURE

Tag Name	Tag Type	Tag Description
PCU-3\PI-3185_A	Digital	PCU-3 INPUT ANALOG OVER OR UNDER RANGE ALARM
PCU-3\TI-3126A	Analog	LINE WT-SNL-3150 TEMPERATURE
PCU-3\TI-3126A_A	Digital	PCU-3 INPUT THERMOCOUPLE OVER OR UNDER RANGE ALARM
PCU-3\TI-3126B	Analog	LINE WT-SLL-3160 TEMPERATURE
PCU-3\TI-3126B_A	Digital	PCU-3 INPUT THERMOCOUPLE OVER OR UNDER RANGE ALARM
PCU-3\ZA-3165A	Digital	VALVE POSITION SWITCH FAILURE Y71
PCU-3\ZA-3165A1	Digital	VALVE FAILED TO OPEN Y71
PCU-3\ZA-3165A2	Digital	VALVE FAILED TO CLOSE Y71
PCU-3\ZA-3165B	Digital	VALVE POSITION SWITCH FAILURE Y71
PCU-3\ZA-3165B1	Digital	VALVE FAILED TO OPEN Y71
PCU-3\ZA-3165B2	Digital	VALVE FAILED TO CLOSE Y71
PCU-3\ZA-3166A	Digital	VALVE POSITION SWITCH FAILURE Y71
PCU-3\ZA-3166A1	Digital	VALVE FAILED TO OPEN Y71
PCU-3\ZA-3166A2	Digital	VALVE FAILED TO CLOSE Y71
PCU-3\ZA-3166B	Digital	VALVE POSITION SWITCH FAILURE Y71
PCU-3\ZA-3166B1	Digital	VALVE FAILED TO OPEN Y71
PCU-3\ZA-3166B2	Digital	VALVE FAILED TO CLOSE Y71
PCU-3\ZA-3167A	Digital	VALVE POSITION SWITCH FAILURE Y88-1
PCU-3\ZA-3167A1	Digital	VALVE FAILED TO OPEN Y88-1
PCU-3\ZA-3167A2	Digital	VALVE FAILED TO CLOSE Y88-1
PCU-3\ZA-3167B	Digital	VALVE POSITION SWITCH FAILURE Y88-2
PCU-3\ZA-3167B1	Digital	VALVE FAILED TO OPEN Y88-2
PCU-3\ZA-3167B2	Digital	VALVE FAILED TO CLOSE Y88-2
PCU-3\ZA-3168A	Digital	VALVE POSITION SWITCH FAILURE Y81-3
PCU-3\ZA-3168A1	Digital	VALVE FAILED TO OPEN Y81-3
PCU-3\ZA-3168A2	Digital	VALVE FAILED TO CLOSE Y81-3
PCU-3\ZA-3168B	Digital	VALVE POSITION SWITCH FAILURE Y81-4
PCU-3\ZA-3168B1	Digital	VALVE FAILED TO OPEN Y81-4
PCU-3\ZA-3168B2	Digital	VALVE FAILED TO CLOSE Y81-4
PCU-3\ZA-3185A	Digital	VALVE POSITION SWITCH FAILURE Y81-1
PCU-3\ZA-3185A1	Digital	VALVE FAILED TO OPEN Y81-1
PCU-3\ZA-3185A2	Digital	VALVE FAILED TO CLOSE Y81-1
PCU-3\ZA-3185B	Digital	VALVE POSITION SWITCH FAILURE Y81-2
PCU-3\ZA-3185B1	Digital	VALVE FAILED TO OPEN Y81-2
PCU-3\ZA-3185B2	Digital	VALVE FAILED TO CLOSE Y81-2
PCU-3\ZLH-3165A	Digital	SOV-3165A IS OPEN Y70
PCU-3\ZLH-3165B	Digital	SOV-3165B IS OPEN Y70
PCU-3\ZLH-3166A	Digital	SOV-3166A IS OPEN Y70
PCU-3\ZLH-3166B	Digital	SOV-3166B IS OPEN Y70
PCU-3\ZLH-3167A	Digital	SOV-3167A IS OPEN Y88-1
PCU-3\ZLH-3167B	Digital	SOV-3167B IS OPEN Y-88.2
PCU-3\ZLH-3168A	Digital	SOV-3168A IS OPEN Y81-3
PCU-3\ZLH-3168B	Digital	SOV-3168B IS OPEN Y-81-4
PCU-3\ZLH-3185A	Digital	SOV-3185A IS OPEN Y81-1
PCU-3\ZLH-3185B	Digital	SOV-3185B IS OPEN Y81-2
PCU-3\ZLL-3165A	Digital	SOV-3165A IS CLOSED Y70
PCU-3\ZLL-3165B	Digital	SOV-3165B IS CLOSED Y70
PCU-3\ZLL-3166A	Digital	SOV-3166A IS CLOSED Y70
PCU-3\ZLL-3166B	Digital	SOV-3166B IS CLOSED Y70
PCU-3\ZLL-3167A	Digital	SOV-3167A IS CLOSED Y88-1
PCU-3\ZLL-3167B	Digital	SOV-3167B IS CLOSED Y-88.2
PCU-3\ZLL-3168A	Digital	SOV-3168A IS CLOSED Y81-3
PCU-3\ZLL-3168B	Digital	SOV-3168B IS CLOSED Y-81-4
PCU-3\ZLL-3185A	Digital	SOV-3185A IS CLOSED Y81-1
PCU-3\ZLL-3185B	Digital	SOV-3185B IS CLOSED Y81-2
SCREEN_NUMBER	Analog	CURRENT SCREEN NUMBER (1 TO 12)
SECURITY	Analog	PRESENT SECURITY LEVEL
system\DateAndTimeString	String	System date and time string
VALVE_NAME	String	VALVE NAME FOR DISPLAY IN THE VALVE POP-UPS

2.2.14 Graphics\Display\10liftsn

HANFORD CROSS SITE TRANSFER SYSTEM - PCU-4 - 244A LIFT STATION

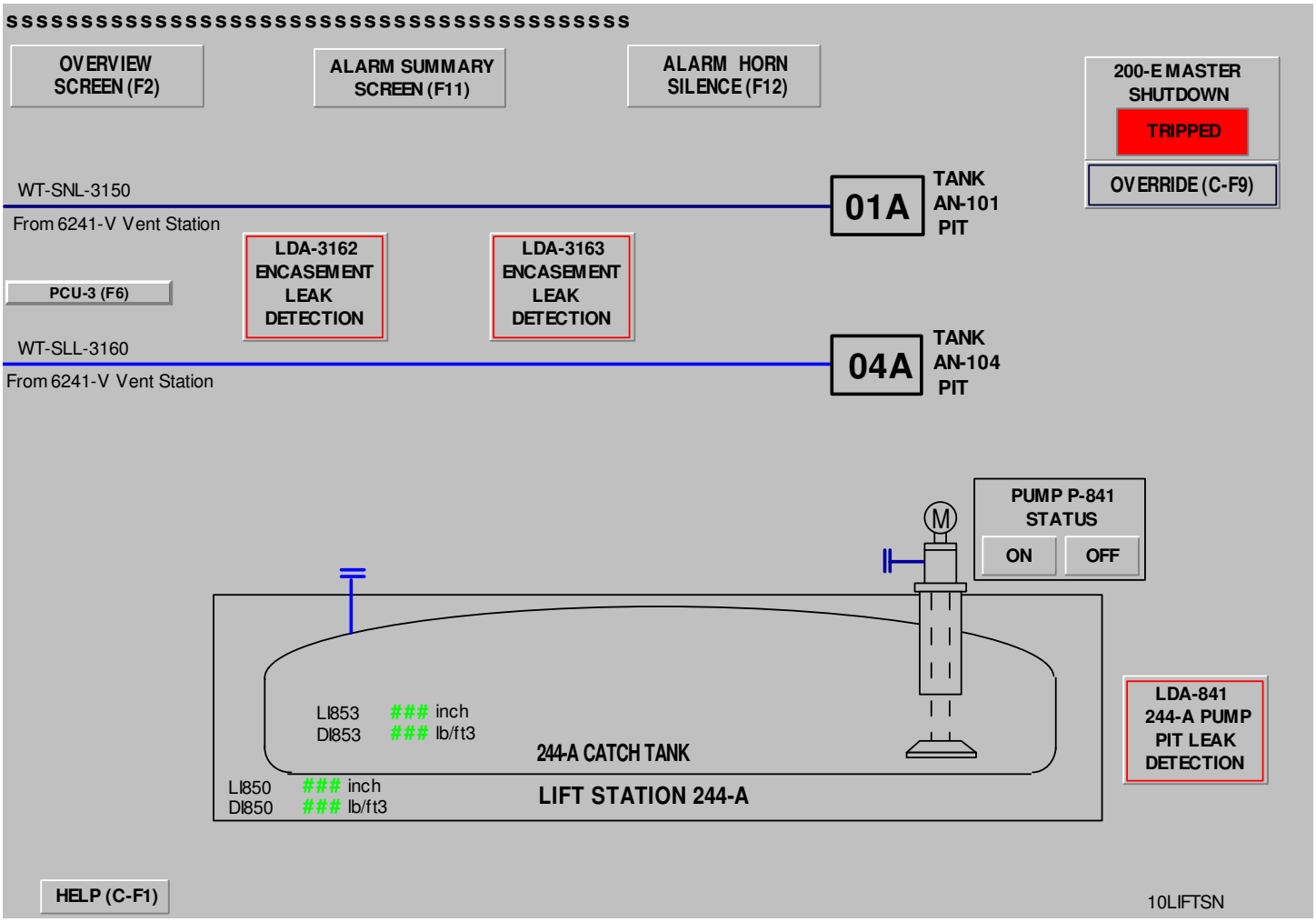

2.2.14.1 Display Settings

Section	Option	Selection
Properties	Display Type	Replace
	Allow Multiple Running Copies	No
	Cache after Displaying	Yes
	Title Bar	Yes "HANFORD CROSS SITE TRANSFER SYSTEM - PCU-4 - 244A LIFT STATION"
	System Menu	No
	Minimize Button	No
	Maximize Button	No
	Size to Main Window at Runtime	Yes
	Show last Acquired Value	Yes
	Use Current Size	No (Size in Pixels: 790 x 551)
	Allow Display to be Resized	No
	Use Current Position	No (Position in Pixels: 0 x 0)
	Security Code	*
	Background Color	0xC0C0C0
Behavior	Startup Command	SCREEN_NUMBER = 10
	Shutdown Command	
	Input Field Not Selected Text Color	0x0
	Input Field Not Selected Fill Color	0xFFFFFF
	Input Field Selected Text Color	0xFFFFFF
	Input Field Selected Fill Color	0x8000
	Beep on Press of Interactive Object	No
	Highlight when Cursor Passes Over Interactive Objects	Yes Highlight Color: 0x0
	Highlight Color of Objects with Input Focus	0x808080
	Display On-screen Keyboard	No

2.2.14.2 Animated Display Objects

Object Name	Grouping	X	Y	Property	Expression
Group68	++Group68	294	138		
Group68	|	294	138	Group: Color Control	{PCU-4\LDA-3163}
Group68	+-Group68				
Group70	++Group70	5	25		
Group70	|	5	25	Group: Touch Control: Press Action	DISPLAY 01OVERVW
Group70	+-Group70				
Group72	++Group72	377	25		
Group72	|	377	25	Group: Visibility Control	MAINTENANCE_STATION == 0
	|			Group: Touch Control: Press Action	SilenceAll
Group72	+-Group72				
Group74	++Group74	676	405		
Group74	|	676	405	Group: Color Control	{PCU-4\LDA-841}
Group74	+-Group74				
NumericDisplay9		181	464	Numeric Display	{PCU-4\LI-850}
				Numeric Display: Color Control	NOT {PCU-4\LI-850_A}
NumericDisplay10		181	476	Numeric Display	{PCU-4\DI-850} / 10.0
				Numeric Display: Color Control	NOT {PCU-4\DI-850_A}
NumericDisplay11		234	419	Numeric Display	{PCU-4\LI-853}
				Numeric Display: Color Control	NOT {PCU-4\LI-853_A}
NumericDisplay12		234	432	Numeric Display	{PCU-4\DI-853} / 10.0
				Numeric Display: Color Control	NOT {PCU-4\DI-853_A}
Group82	++Group82	23	528		
Group82	|	23	528	Group: Touch Control: Press Action	ABORT
					Display 02help
Group81	| ++Group81	23	528		
Group81	| |	23	528	Group: Touch Control: Press Action	Abort
					Display 02HELP
Group81	| +-Group81				
Group82	+-Group82				
StringDisplay3		2	2	String Display	system\DateAndTimeString
Group85	++Group85	591	321		
Group83	| ++Group83	591	321		
Rectangle	| |	593	323	Rectangle: Color Control	{PCU-4\YL-841}
Group83	| +-Group83				
Group84	| ++Group84	641	321		
Rectangle	| |	643	323	Rectangle: Color Control	{PCU-4\YL-841} <> 1
Group84	| +-Group84				
Group85	+-Group85				
Group87	++Group87	188	27		
Group87	|	188	27	Group: Touch Control: Press Action	ABORT *
					Display 03almsmc
	|			Group: Visibility Control	SECURITY >= 1
Group87	+-Group87				
Group89	++Group89	188	27		
Group89	|	188	27	Group: Touch Control: Press Action	Display 03almsmv
	|			Group: Visibility Control	SECURITY >= 1
Group89	+-Group89				
Group92	++Group92	653	95		
Rectangle	|	655	97	Rectangle: Color Control	If {PCU-4\YL-058E} Then 2
					Else 0
Group92	+-Group92				
Group94	++Group94	653	95		
Group94	|	653	95	Group: Touch Control: Press Action	PB_INDICATOR = 3
					DISPLAY PB_ACK /U /TPCU-4\HS-058E /CR
	|			Group: Visibility Control	(SECURITY >= 1) AND {pcu-4\XA-058E}
Rectangle	|	655	97	Rectangle: Color Control	If PB_INDICATOR == 3 Then 1
					Else If {PCU-4\YL-058E} Then 2
					Else 0
Group94	+-Group94				
Group97	++Group97	672	63		
Group95	| ++Group95	672	63		
Group95	| |	672	63	Group: Visibility Control	{pcu-4\XA-058E}
Group95	| +-Group95				
Group96	| ++Group96	672	63		
Group96	| |	672	63	Group: Visibility Control	{pcu-4\XA-058E}
Rectangle	| |	672	63	Rectangle: Color Control	If NOT alm_ack({pcu-1\XA-058W}) AND system\BlinkSlow Then 0 Else 8
Group96	| +-Group96				
Group97	+-Group97				
Button2		2	167	Button: "PCU-3 (F6)": Touch Control: Release Action	Display 09VENTSN
Group99	++Group99	145	138		
Group99	|	145	138	Group: Color Control	{PCU-5\LDA-3162}
Group99	+-Group99				
Display Commands		x	x	Startup Command	SCREEN_NUMBER = 10
				Shutdown Command	

2.2.14.3 Database Tags Used by the Component

Tag Name	Tag Type	Tag Description
MAINTENANCE_STATION	Digital	OIT STATION SELECTION - TRUE=MAINTENANCE, FALSE=OPERATOR
PB_INDICATOR	Analog	VALUE INDICATING THE PUSHBUTTON BEING ACKNOWLEDGED
PCU-4\DI-850	Analog	DENSITY READING OF 244-A SUMP

Tag Name	Tag Type	Tag Description
PCU-4\DI-850_A	Digital	PCU-4 INPUT ANALOG OVER OR UNDER RANGE ALARM
PCU-4\DI-853	Analog	DENSITY READING OF 244-A CATCH TANK
PCU-4\DI-853_A	Digital	PCU-4 INPUT ANALOG OVER OR UNDER RANGE ALARM
PCU-4\LDA-3163	Digital	244-A TO AN ENC. LEAK DETECTION [OFF = ALARM]
PCU-4\LDA-841	Digital	244-A PUMP PIT LEAK DETECTION (OFF=ALARM) Y72
PCU-4\LI-850	Analog	244-A SUMP LEVEL READING
PCU-4\LI-850_A	Digital	PCU-4 INPUT ANALOG OVER OR UNDER RANGE ALARM
PCU-4\LI-853	Analog	244-A CATCH TANK LEVEL READING
PCU-4\LI-853_A	Digital	PCU-4 INPUT ANALOG OVER OR UNDER RANGE ALARM
pcu-4\XA-058E	Digital	200-E MASTER SHUTDOWN CIRCUIT ACTIVATED Y-77.1
PCU-4\YL-058E	Digital	OVERRIDE OF 200-E MASTER SHUTDOWN Y-77.1
PCU-4\YL-841	Digital	ON/OFF STATUS FOR PUMP P-841 (OCS)
PCU-5\LDA-3162	Digital	244-A ENCASEMENT LEAK DETECTION [OFF = ALARM] Y72
SCREEN_NUMBER	Analog	CURRENT SCREEN NUMBER (1 TO 12)
SECURITY	Analog	PRESENT SECURITY LEVEL
system\BlinkSlow	Digital	Changes every 500 ms
system\DateAndTimeString	String	System date and time string

2.2.15 Graphics\Display\11sy101

HANFORD CROSS SITE TRANSFER SYSTEM - PCU-1 - TRANSFER PUMP FROM SY-101

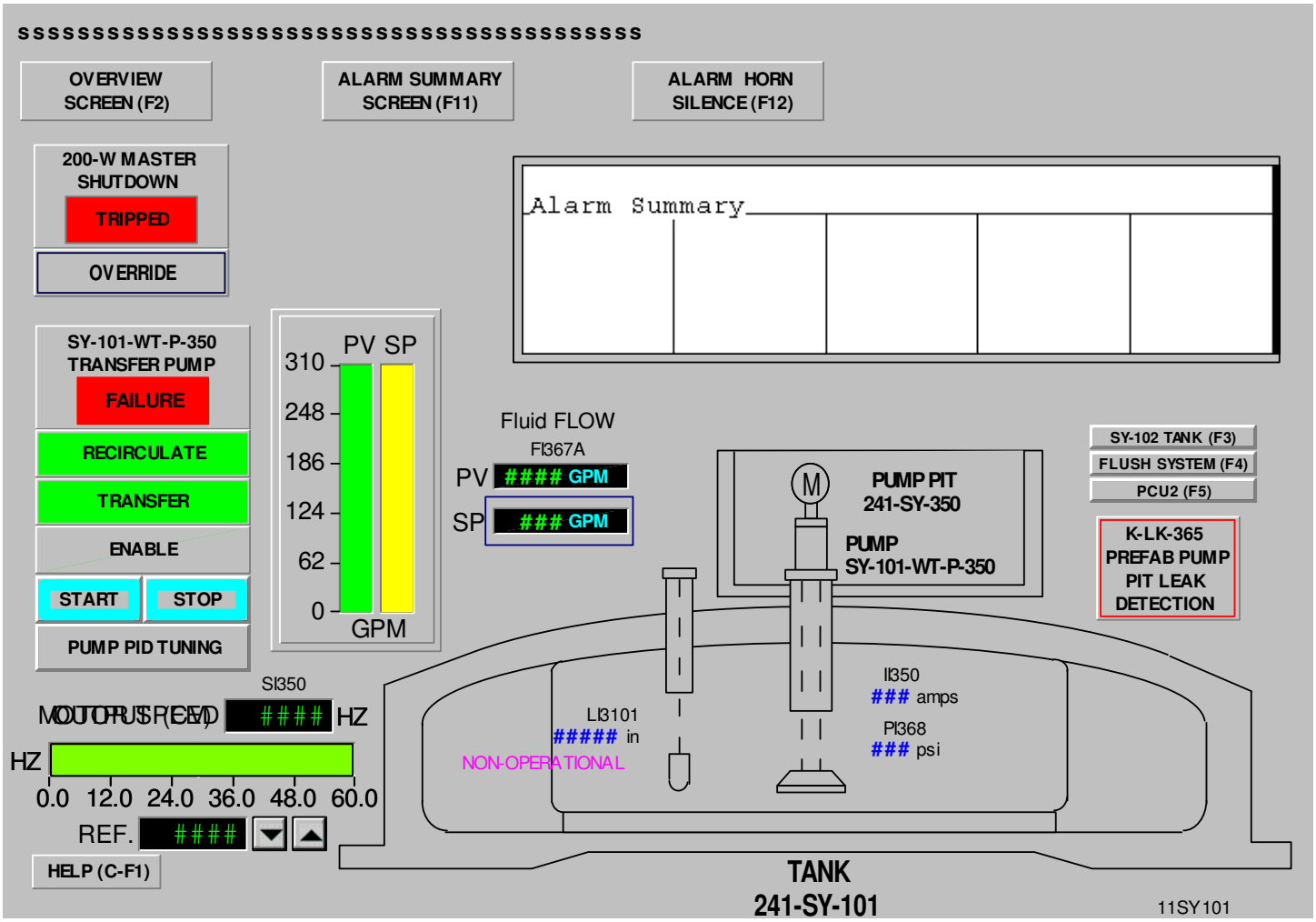

2.2.15.1 Display Settings

Section	Option	Selection
Properties	Display Type	Replace
	Allow Multiple Running Copies	No
	Cache after Displaying	Yes
	Title Bar	Yes "HANFORD CROSS SITE TRANSFER SYSTEM - PCU-1 - TRANSFER PUMP FROM SY-101"
	System Menu	No
	Minimize Button	No
	Maximize Button	No
	Size to Main Window at Runtime	Yes
	Show last Acquired Value	Yes
	Use Current Size	No (Size in Pixels: 790 x 551)
	Allow Display to be Resized	No
	Use Current Position	No (Position in Pixels: 0 x 0)
	Security Code	*
	Background Color	0xC0C0C0
Behavior	Startup Command	SCREEN_NUMBER = 11; PB_INDICATOR = 0
	Shutdown Command	
	Input Field Not Selected Text Color	0x0
	Input Field Not Selected Fill Color	0xFFFFFF
	Input Field Selected Text Color	0xFFFFFF
	Input Field Selected Fill Color	0x8000
	Beep on Press of Interactive Object	No
	Highlight when Cursor Passes Over Interactive Objects	Yes Highlight Color: 0x0
	Highlight Color of Objects with Input Focus	0x808080
	Display On-screen Keyboard	No

2.2.15.2 Animated Display Objects

Object Name	Grouping	X	Y	Property	Expression
Group53	++Group53	85	345		
Button8	|	85	345	Button: "STOP": Touch Control: Press Action	PB_INDICATOR = 2; DISPLAY PB_ACK /U /TPCU-1\HS-3101B /CL
	|			Button: "STOP": Visibility Control	(SECURITY >= 1) AND ({PCU-3\MD_SL_101} OR {PCU-3\MD_SU_101}) AND {PCU-1\P-101E}
Rectangle	|	87	347	Rectangle: Visibility Control	(PB_INDICATOR == 2) AND system\BlinkSlow
Group53	+-Group53				
Group52	++Group52	20	345		
Button2	|	20	345	Button: "START": Touch Control: Press Action	PB_INDICATOR = 1; DISPLAY PB_ACK /U /TPCU-1\HS-3101A /CL; {PCU-1\PID-3101-MR}=200
	|			Button: "START": Visibility Control	(SECURITY >= 1) AND ({PCU-3\MD_SL_101} OR {PCU-3\MD_SU_101}) AND {PCU-1\P-101E}
Rectangle	|	22	347	Rectangle: Visibility Control	(PB_INDICATOR == 1) AND system\BlinkSlow
Group52	+-Group52				
Group3	++Group3	11	35		
Group3	|	11	35	Group: Touch Control: Press Action	DISPLAY 01OVERVW
Group3	+-Group3				
Group5	++Group5	380	35		
Group5	|	380	35	Group: Visibility Control	MAINTENANCE_STATION == 0
	|			Group: Touch Control: Press Action	SilenceAll
Group5	+-Group5				
Group55	++Group55	524	398		
NumericDisplay2	|	524	410	Numeric Display	{PCU-1\II-350}
	|			Numeric Display: Color Control	NOT {PCU-1\II-3102_A}
Group55	+-Group55				
Group20	++Group20	18	513		
Group20	|	18	513	Group: Touch Control: Press Action	ABORT Display 02help
Group19	| ++Group19	18	513		
Group19	| |	18	513	Group: Touch Control: Press Action	Abort Display 02HELP
Group19	| +-Group19				
Group20	+-Group20				
StringDisplay1		9	9	String Display	system\DateAndTimeString
Group23	++Group23	20	286		
Rectangle	|	22	288	Rectangle: Visibility Control	{PCU-1\ZL-3101D}
Group23	+-Group23				
Group32	++Group32	45	225		
Group32	|	45	225	Group: Visibility Control	{PCU-1\P-101R}
Group32	+-Group32				
Group33	++Group33	45	225		
Group33	|	45	225	Group: Visibility Control	{PCU-1\P-101R}
Group33	+-Group33				
Group36	++Group36	19	148		
Rectangle	|	21	150	Rectangle: Color Control	If {PCU-1\YL-058W} Then 2 Else 0
Group36	+-Group36				
Group38	++Group38	19	148		
Group38	|	19	148	Group: Touch Control: Press Action	PB_INDICATOR = 4 DISPLAY PB_ACK /U /TPCU-1\HS-058W /CL
	|			Group: Visibility Control	(SECURITY >= 1) AND {pcu-1\XA-058W}
Rectangle	|	21	150	Rectangle: Color Control	If PB_INDICATOR == 4 Then 1 Else If {PCU-1\YL-058W} Then 2 Else 0
Group38	+-Group38				
Group40	++Group40	20	257		
Rectangle	|	22	259	Rectangle: Visibility Control	{PCU-1\ZL-3101C}
Group40	+-Group40				
Group42	++Group42	20	286		
Group42	|	20	286	Group: Visibility Control	(SECURITY >= 2) AND NOT ({PCU-1\P-101R} OR {PCU-1\P-101-WT-RUN}) AND ({PCU-3\MD_SL_101} OR {PCU-3\MD_SU_101})
	|			Group: Touch Control: Press Action	PCU-1\HS-3101C = 0
Rectangle	|	22	288	Rectangle: Visibility Control	{PCU-1\ZL-3101D}
Group42	+-Group42				
Group44	++Group44	20	257		
Group44	|	20	257	Group: Visibility Control	(SECURITY >= 2) AND NOT ({PCU-1\P-101R} OR {PCU-1\P-101-WT-RUN}) AND ({PCU-3\MD_SL_101} OR {PCU-3\MD_SU_101})
	|			Group: Touch Control: Press Action	PCU-1\HS-3101C = 1
Rectangle	|	22	259	Rectangle: Visibility Control	{PCU-1\ZL-3101C}
Group44	+-Group44				
Group46	++Group46	193	35		
Group46	|	193	35	Group: Touch Control: Press Action	ABORT * Display 03almsmc
	|			Group: Visibility Control	SECURITY >= 1
Group46	+-Group46				
Group48	++Group48	193	35		
Group48	|	193	35	Group: Touch Control: Press Action	Display 03almsmv
	|			Group: Visibility Control	SECURITY >= 1

Object Name	Grouping	X	Y	Property	Expression
Group48	+-Group48				
Ellipse		476	277	Elipse: Color Control	{PCU-1\P-101R}
Group51	++Group51	38	116		
Group49	| ++Group49	38	116		
Group49	| |	38	116	Group: Visibility Control	{pcu-1\XA-058W}
Group49	| +-Group49				
Group50	| ++Group50	38	116		
Group50	| |	38	116	Group: Visibility Control	{pcu-1\XA-058W}
Rectangle	| |	38	116	Rectangle: Color Control	If NOT alm_ack({pcu-1\XA-058W}) AND system\BlinkSlow Then 0 Else 8
Group50	| +-Group50				
Group51	+-Group51				
Button3		656	270	Button: "FLUSH SYSTEM (F4)": Touch Control: Release Action	Display 13flush
Button5		656	254	Button: "SY-102 TANK (F3)": Touch Control: Release Action	Display 12sy102
Button6		656	286	Button: "PCU2 (F5)": Touch Control: Release Action	Display 04divbox
Group58	++Group58	524	430		
NumericDisplay5	|	524	442	Numeric Display	{PCU-1\PI-368}
	|			Numeric Display: Color Control	NOT {PCU-1\II-3102_A}
Group58	+-Group58				
Group60	++Group60	277	340		
Group60	|	277	340	Group: Visibility Control	1
Group18	| ++Group18	398	340		
Group18	| |	398	340	Group: Visibility Control	1
Group18	| +-Group18				
NumericDisplay6	|	332	434	Numeric Display	{PCU-1\LI-3101}/10.
	|			Numeric Display: Color Control	NOT ({PCU-1\LI-3102_A} OR {PCU-1\LAL-3102})
Group60	+-Group60				
Group25	++Group25	660	309		
Group25	|	660	309	Group: Color Control	alm_in_alarm({PCU-1\K-LA-365})
Group25	+-Group25				
Group26	++Group26	162	184		
Group26	|	162	184	Group: Visibility Control	{PCU-1\HS-3101-M}
Rectangle	|	204	218	Rectangle: Fill Control	{PCU-1\FI-367A}
Rectangle	|	229	218	Rectangle: Fill Control	{PCU-1\PID-3101-FR}
Group26	+-Group26				
Group31	++Group31	4	419		
Group31	|	4	419	Group: Visibility Control	{PCU-1\HS-3101-M}
NumericDisplay19	|	154	420	Numeric Display	{PCU-1\FIC-3101-O}/100.
Group87	| ++Group87	20	420		
Group86	| | ++Group86	29	446		
Rectangle	| | |	29	446	Rectangle: Fill Control	{PCU-1\FIC-3101-O}
Group86	| | +-Group86				
Group87	| +-Group87				
Group31	+-Group31				
Group121	++Group121	45	225		
Group121	|	45	225	Group: Visibility Control	{PCU-1\XA-350}
Group121	+-Group121				
Group59	++Group59	273	244		
Group59	|	273	244	Group: Visibility Control	{PCU-1\ZL-3102C}
Group29	| ++Group29	296	277		
NumericDisplay9	| |	303	277	Numeric Display	{PCU-1\FI-367A}
Group29	| +-Group29				
Group59	+-Group59				
Group27	++Group27	271	297		
Group27	|	271	297	Group: Visibility Control	{PCU-1\HS-3101-M}
Group56	| ++Group56	291	297		
Rectangle	| |	291	297	Rectangle: Color Control	PB_INDICATOR == 3
Group54	| | ++Group54	296	304		
Group30	| | | ++Group30	296	304		
NumericDisplay1	| | | |	312	304	Numeric Display	{PCU-1\PID-3101-FR}
Group30	| | | +-Group30				
Rectangle	| | |	297	305	Rectangle: Visibility Control	(SECURITY >= 1)
	| | |			Rectangle: Touch Control: Press Action	PB_INDICATOR = 3 DISPLAY ENTRY /U /T PCU-1\PID-3101-FR /CB
Group54	| | +-Group54				
Group56	| +-Group56				
Group27	+-Group27				
Button4		20	374	Button: "PUMP PID TUNING": Visibility Control	(SECURITY >= 3) AND ({PCU-3\MD_SL_101} OR {PCU-3\MD_SU_101})
				Button: "PUMP PID TUNING": Touch Control: Press Action	Display Pmp350pid /Q3
Group65	++Group65	20	315		
Rectangle	|	22	317	Rectangle: Visibility Control	{PCU-1\P-101E}
Text46	|	61	322	Text: "ENABLED": Visibility Control	({PCU-3\MD_SL_101} OR {PCU-3\MD_SU_101})
Text40	|	64	322	Text: "ENABLE": Visibility Control	({PCU-3\MD_SL_101} OR {PCU-3\MD_SU_101})
Group65	+-Group65				
Group67	++Group67	20	315		
Group67	|	20	315	Group: Visibility Control	(SECURITY >= 1) AND NOT ({PCU-1\P-101R} OR {PCU-1\P-101-WT-RUN}) AND ({PCU-3\MD_SL_101} OR {PCU-3\MD_SU_101}) AND NOT {PCU-1\P-101E}
	|			Group: Touch Control: Press Action	{PCU-1\HS-3101D} = 1
Group67	+-Group67				
Group57	++Group57	4	403		
Group57	|	4	403	Group: Visibility Control	{PCU-1\HS-3101-M}
Button11	|	151	490	Button: Visibility Control	(SECURITY >= 1) AND ({PCU-3\MD_SL_101} OR {PCU-3\MD_SU_101}) AND {PCU-1\P-101E}
	|			Button: Touch Control: Release Action	{PCU-1\PID-3101-MR}={PCU-1\PID-3101-MR}-5

Object Name	Grouping	X	Y	Property	Expression
Button9	|	175	490	Button: Visibility Control	(SECURITY >= 1) AND ({PCU-3\MD_SL_101} OR {PCU-3\MD_SU_101}) AND {PCU-1\P-101E}
	|			Button: Touch Control: Release Action	{PCU-1\PID-3101-MR}={PCU-1\PID-3101-MR}+5
Group76	| ++Group76	4	419		
NumericDisplay7	| |	154	420	Numeric Display	{PCU-1\SI-350}/10.
Group75	| | ++Group75	20	420		
Group74	| | | ++Group74	29	446		
Rectangle	| | | |	29	446	Rectangle: Fill Control	{PCU-1\SI-350}
Group74	| | | +-Group74				
Group75	| | +-Group75				
Group76	| +-Group76				
Group78	| ++Group78	82	490		
NumericDisplay11	| |	102	491	Numeric Display	{PCU-1\PID-3101-MR}/10.
Group78	| +-Group78				
Group57	+-Group57				
Display Commands		x	x	Startup Command Shutdown Command	SCREEN_NUMBER = 11; PB_INDICATOR = 0

2.2.15.3 Database Tags Used by the Component

Tag Name	Tag Type	Tag Description
MAINTENANCE_STATION	Digital	OIT STATION SELECTION - TRUE=MAINTENANCE, FALSE=OPERATOR
PB_INDICATOR	Analog	VALUE INDICATING THE PUSHBUTTON BEING ACKNOWLEDGED
PCU-1\FI-367A	Analog	SY-101-WT-P-350 TRANSFER PUMP DISCHARGE FLOW
PCU-1\FIC-3101-O	Analog	PUMP SY-101-WT-P-350 OUTLET FLOW/ DRIVE SPEED REF OUTPUT
PCU-1\HS-3101-M	Digital	PID FOR PUMP SY-101-WT-P-350 MANUAL MODE
PCU-1\HS-3101C	Digital	TRANSFER PUMP SY-101-WT-P-350 RECIRCULATION
PCU-1\HS-3101D	Digital	ENABLE SY-101-WT-P-350 PUMP
PCU-1\II-3102_A	Digital	PCU-1 INPUT ANALOG OVER OR UNDER RANGE ALARM
PCU-1\II-350	Analog	SY-101-WT-P-350 TRANSFER PUMP CURRENT
PCU-1\LAL-3102	Digital	TANK 241-SY-102 LOW LEVEL
PCU-1\LI-3101	Analog	241-SY-101 TANK LEVEL INDICATION
PCU-1\LI-3102_A	Digital	PCU-1 INPUT ANALOG OVER OR UNDER RANGE ALARM
PCU-1\P-101-WT-RUN	Digital	RUN PUMP SY-101-WT-P-350
PCU-1\P-101E	Digital	TRANSFER PUMP SY-101-WT-P-350 ENABLED
PCU-1\P-101R	Digital	TRANSFER PUMP SY-101-WT-P-350 RUNNING
PCU-1\PI-368	Analog	SY-101-WT-P-350 TRANSFER PUMP DISCHARGE PRESSURE
PCU-1\PID-3101-FR	Analog	TRANSFER PUMP SY-101-WT-P-350 FLOW SETPOINT REF FROM OIT
PCU-1\PID-3101-MR	Analog	TRANSFER PUMP SY-101-WT-P-350 MANUAL REF FROM OIT
PCU-1\SI-350	Analog	SY-101-WT-P-350 TRANSFER PUMP SPEED
pcu-1\XA-058W	Digital	200-W MASTER SHUTDOWN CIRCUIT ACTIVATED Y-77.1
PCU-1\XA-350	Digital	SY-101-WT-P-350 TRANSFER PUMP FAILURE
PCU-1\YL-058W	Digital	OVERRIDE OF 200-W MASTER SHUTDOWN Y-77.1
PCU-1\ZL-3101C	Digital	TRANSFER PUMP SY-101-WT-P-350 RECIRCULATION MODE
PCU-1\ZL-3101D	Digital	TRANSFER PUMP SY-101-WT-P-350 TRANSFER MODE
PCU-1\ZL-3102C	Digital	TRANSFER PUMP P-102-SY-02A RECIRCULATION MODE Y-75.1
PCU-3\MD_SL_101	Digital	SLURRY MODE TRANSFER FROM SY101 SELECTED
PCU-3\MD_SU_101	Digital	SUPERNATE MOVE TRANSFER FROM SY101 SELECTED
SCREEN_NUMBER	Analog	CURRENT SCREEN NUMBER (1 TO 12)
SECURITY	Analog	PRESENT SECURITY LEVEL
system\BlinkSlow	Digital	Changes every 500 ms
system\DateAndTimeString	String	System date and time string

2.2.16 Graphics\Display\12sy102

HANFORD CROSS SITE TRANSFER SYSTEM - PCU-1 - TRANSFER PUMP FROM SY-102

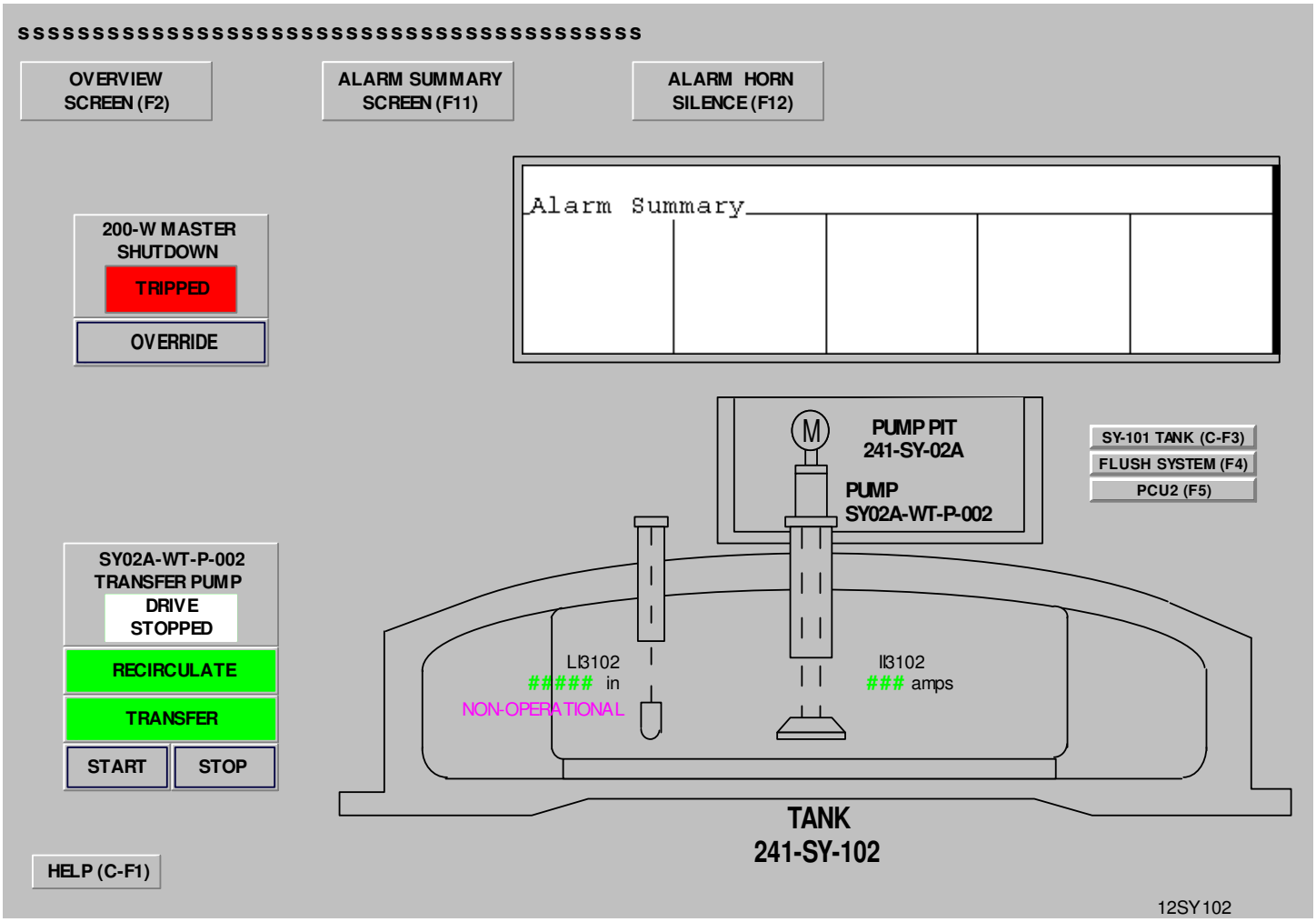

2.2.16.1 Display Settings

Section	Option	Selection
Properties	Display Type	Replace
	Allow Multiple Running Copies	No
	Cache after Displaying	Yes
	Title Bar	Yes "HANFORD CROSS SITE TRANSFER SYSTEM - PCU-1 - TRANSFER PUMP FROM SY-102"
	System Menu	No
	Minimize Button	No
	Maximize Button	No
	Size to Main Window at Runtime	Yes
	Show last Acquired Value	Yes
	Use Current Size	No (Size in Pixels: 790 x 551)
	Allow Display to be Resized	No
	Use Current Position	No (Position in Pixels: 0 x 0)
	Security Code	*
	Background Color	0xC0C0C0
Behavior	Startup Command	SCREEN_NUMBER = 12; PB_INDICATOR = 0
	Shutdown Command	
	Input Field Not Selected Text Color	0x0
	Input Field Not Selected Fill Color	0xFFFFFF
	Input Field Selected Text Color	0xFFFFFF
	Input Field Selected Fill Color	0x8000
	Beep on Press of Interactive Object	No
	Highlight when Cursor Passes Over Interactive Objects	Yes Highlight Color: 0x0
	Highlight Color of Objects with Input Focus	0x808080
	Display On-screen Keyboard	No

2.2.16.2 Animated Display Objects

Object Name	Grouping	X	Y	Property	Expression
Group3	++Group3	11	35		
Group3	|	11	35	Group: Touch Control: Press Action	DISPLAY 01OVERVW
Group3	+-Group3				
Group5	++Group5	380	35		
Group5	|	380	35	Group: Visibility Control	MAINTENANCE_STATION == 0
	|			Group: Touch Control: Press Action	SilenceAll
Group5	+-Group5				
NumericDisplay1		317	402	Numeric Display	{PCU-1\LI-3102}/10.
				Numeric Display: Color Control	NOT ({PCU-1\LI-3102_A} OR {PCU-1\LAL-3102})
NumericDisplay2		521	402	Numeric Display	{PCU-1\II-3102}
				Numeric Display: Color Control	NOT {PCU-1\II-3102_A}
Group20	++Group20	18	513		
Group20	|	18	513	Group: Touch Control: Press Action	ABORT Display 02help
Group19	| ++Group19	18	513		
Group19	| |	18	513	Group: Touch Control: Press Action	Abort Display 02HELP
Group19	| +-Group19				
Group20	+-Group20				
StringDisplay1		9	9	String Display	system\DateAndTimeString
Group23	++Group23	37	417		
Rectangle	|	39	419	Rectangle: Visibility Control	{PCU-1\ZL-3102D}
Group23	+-Group23				
Group29	++Group29	102	446		
Group29	|	102	446	Group: Visibility Control	(SECURITY >= 1) AND ({PCU-3\MD_SL_102} OR {PCU-3\MD_SU_102})
	|			Group: Touch Control: Press Action	PB_INDICATOR = 2 DISPLAY PB_ACK /U /TPCU-1\HS-3102B /CL
Rectangle	|	104	448	Rectangle: Color Control	PB_INDICATOR == 2
Group29	+-Group29				
Group31	++Group31	37	446		
Group31	|	37	446	Group: Visibility Control	(SECURITY >= 1) AND ({PCU-3\MD_SL_102} OR {PCU-3\MD_SU_102})
	|			Group: Touch Control: Press Action	PB_INDICATOR = 1 DISPLAY PB_ACK /U /TPCU-1\HS-3102A /CL
Rectangle	|	39	448	Rectangle: Color Control	PB_INDICATOR == 1
Group31	+-Group31				
Group32	++Group32	62	356		
Group32	|	62	356	Group: Visibility Control	{PCU-1\P-102-SY-02A3}
Group32	+-Group32				
Group33	++Group33	62	356		
Group33	|	62	356	Group: Visibility Control	{PCU-1\P-102-SY-02A3}
Group33	+-Group33				
Group36	++Group36	43	190		
Rectangle	|	45	192	Rectangle: Color Control	If {PCU-1\YL-058W} Then 2 Else 0
Group36	+-Group36				
Group38	++Group38	43	190		
Group38	|	43	190	Group: Touch Control: Press Action	PB_INDICATOR = 3 DISPLAY PB_ACK /U /TPCU-1\HS-058W /CL
	|			Group: Visibility Control	(SECURITY >= 1) AND {pcu-1\XA-058W}
Rectangle	|	45	192	Rectangle: Color Control	If PB_INDICATOR == 3 Then 1 Else If {PCU-1\YL-058W} Then 2 Else 0
Group38	+-Group38				
Group40	++Group40	37	388		
Rectangle	|	39	390	Rectangle: Visibility Control	{PCU-1\ZL-3102C}
Group40	+-Group40				
Group42	++Group42	37	417		
Group42	|	37	417	Group: Visibility Control	(SECURITY >= 2) AND NOT ({PCU-1\P-102-SY-02A3} OR {PCU-1\P-102-SY-02A1}) AND ({PCU-3\MD_SL_102} OR {PCU-3\MD_SU_102})
	|			Group: Touch Control: Press Action	PCU-1\HS-3102C = 0
Rectangle	|	39	419	Rectangle: Visibility Control	{PCU-1\ZL-3102D}
Group42	+-Group42				
Group44	++Group44	37	388		
Group44	|	37	388	Group: Visibility Control	(SECURITY >= 2) AND NOT ({PCU-1\P-102-SY-02A3} OR {PCU-1\P-102-SY-02A1}) AND ({PCU-3\MD_SL_102} OR {PCU-3\MD_SU_102})
	|			Group: Touch Control: Press Action	PCU-1\HS-3102C = 1
Rectangle	|	39	390	Rectangle: Visibility Control	{PCU-1\ZL-3102C}
Group44	+-Group44				
Group46	++Group46	193	35		
Group46	|	193	35	Group: Touch Control: Press Action	ABORT * Display 03almsmc
	|			Group: Visibility Control	SECURITY >= 1
Group46	+-Group46				
Group48	++Group48	193	35		
Group48	|	193	35	Group: Touch Control: Press Action	Display 03almsmv
	|			Group: Visibility Control	SECURITY >= 1
Group48	+-Group48				
Ellipse		476	245	Elipse: Color Control	{PCU-1\P-102-SY-02A3}
Group51	++Group51	62	158		

Object Name	Grouping	X	Y	Property	Expression
Group49	| ++Group49	62	158		
Group49	| |	62	158	Group: Visibility Control	{pcu-1\XA-058W}
Group49	| +-Group49				
Group50	| ++Group50	62	158		
Group50	| |	62	158	Group: Visibility Control	{pcu-1\XA-058W}
Rectangle	| |	62	158	Rectangle: Color Control	If NOT alm_ack({pcu-1\XA-058W}) AND system\BlinkSlow Then 0 Else 8
Group50	| +-Group50				
Group51	+-Group51				
Button3		656	270	Button: "FLUSH SYSTEM (F4)": Touch Control: Release Action	Display 13flush
Button4		656	254	Button: "SY-101 TANK (C-F3)": Touch Control: Release Action	Display 11sy101
Button6		656	286	Button: "PCU2 (F5)": Touch Control: Release Action	Display 04divbox
Display Commands		x	x	Startup Command Shutdown Command	SCREEN_NUMBER = 12; PB_INDICATOR = 0

2.2.16.3 Database Tags Used by the Component

Tag Name	Tag Type	Tag Description
MAINTENANCE_STATION	Digital	OIT STATION SELECTION - TRUE=MAINTENANCE, FALSE=OPERATOR
PB_INDICATOR	Analog	VALUE INDICATING THE PUSHBUTTON BEING ACKNOWLEDGED
PCU-1\HS-3102C	Digital	TRANSFER PUMP P-102-SY-02A RECIRCULATION Y-75.1
PCU-1\II-3102	Analog	PUMP P-102-SY-02A CURRENT
PCU-1\II-3102_A	Digital	PCU-1 INPUT ANALOG OVER OR UNDER RANGE ALARM
PCU-1\LAL-3102	Digital	TANK 241-SY-102 LOW LEVEL
PCU-1\LI-3102	Analog	241-SY-102 TANK LEVEL INDICATION
PCU-1\LI-3102_A	Digital	PCU-1 INPUT ANALOG OVER OR UNDER RANGE ALARM
PCU-1\P-102-SY-02A1	Digital	START PUMP P-102-SY-02A Y75
PCU-1\P-102-SY-02A3	Digital	TRANSFER PUMP P-102-SY-02A RUNNING AUX
pcu-1\XA-058W	Digital	200-W MASTER SHUTDOWN CIRCUIT ACTIVATED Y-77.1
PCU-1\YL-058W	Digital	OVERRIDE OF 200-W MASTER SHUTDOWN Y-77.1
PCU-1\ZL-3102C	Digital	TRANSFER PUMP P-102-SY-02A RECIRCULATION MODE Y-75.1
PCU-1\ZL-3102D	Digital	TRANSFER PUMP P-102-SY-02A TRANSFER MODE Y-75.1
PCU-3\MD_SL_102	Digital	SLURRY MODE TRANSFER FROM SY102 SELECTED
PCU-3\MD_SU_102	Digital	SUPERNATE MODE TRANSFER FROM SY102 SELECTED
SCREEN_NUMBER	Analog	CURRENT SCREEN NUMBER (1 TO 12)
SECURITY	Analog	PRESENT SECURITY LEVEL
system\BlinkSlow	Digital	Changes every 500 ms
system\DateAndTimeString	String	System date and time string

2.2.17 Graphics\Display\13flush

HANFORD CROSS SITE TRANSFER SYSTEM - PCU-1 - FLUSH SYSTEM

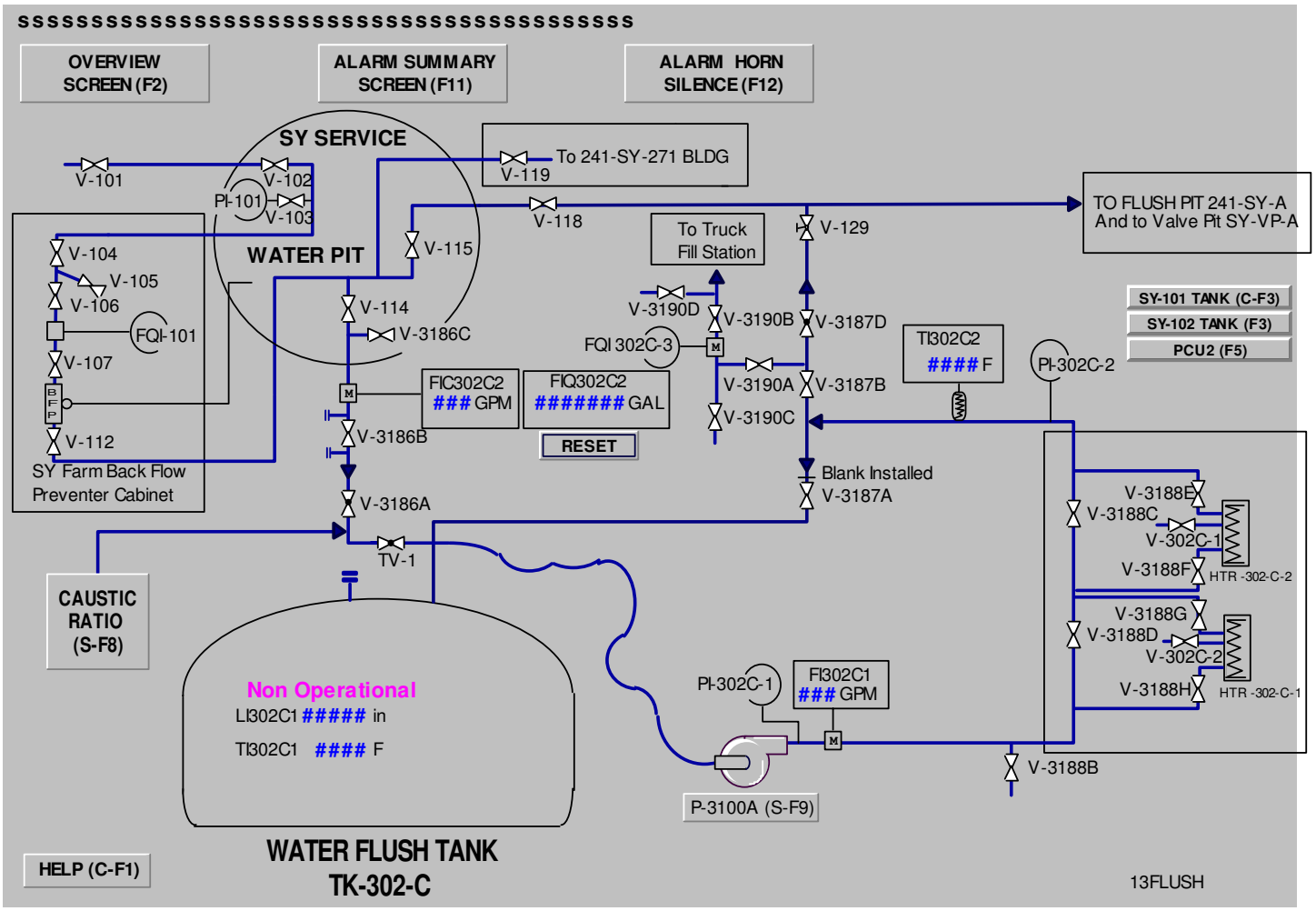

2.2.17.1 Display Settings

Section	Option	Selection
Properties	Display Type	Replace
	Allow Multiple Running Copies	No
	Cache after Displaying	Yes
	Title Bar	Yes "HANFORD CROSS SITE TRANSFER SYSTEM - PCU-1 - FLUSH SYSTEM"
	System Menu	No
	Minimize Button	No
	Maximize Button	No
	Size to Main Window at Runtime	Yes
	Show last Acquired Value	Yes
	Use Current Size	No (Size in Pixels: 790 x 551)
	Allow Display to be Resized	No
	Use Current Position	No (Position in Pixels: 0 x 0)
	Security Code	*
	Background Color	0xC0C0C0
Behavior	Startup Command	SCREEN_NUMBER = 13; PB_INDICATOR = 0
	Shutdown Command	
	Input Field Not Selected Text Color	0x0
	Input Field Not Selected Fill Color	0xFFFFFF
	Input Field Selected Text Color	0xFFFFFF
	Input Field Selected Fill Color	0x8000
	Beep on Press of Interactive Object	No
	Highlight when Cursor Passes Over Interactive Objects	Yes Highlight Color: 0x0
	Highlight Color of Objects with Input Focus	0x808080
	Display On-screen Keyboard	No

2.2.17.2 Animated Display Objects

Object Name	Grouping	X	Y	Property	Expression
Group2	++Group2	11	25		
Group2	|	11	25	Group: Touch Control: Press Action	DISPLAY 01OVERVW
Group2	+-Group2				
Group4	++Group4	380	25		
Group4	|	380	25	Group: Visibility Control	MAINTENANCE_STATION == 0
	|			Group: Touch Control: Press Action	SilenceAll
Group4	+-Group4				
NumericDisplay1		183	427	Numeric Display	{PCU-1\LI-302C-1}/10
				Numeric Display: Color Control	NOT ({PCU-1\LI-302C-1_A} OR {PCU-1\LAL-302C1})
NumericDisplay2		191	448	Numeric Display	{PCU-1\TI-302C-1}
				Numeric Display: Color Control	NOT {PCU-1\TI-302C-1_A}
Group8	++Group8	416	482		
Group8	|	416	482	Group: Touch Control: Press Action	DISPLAY PMP3100A /Q1
Group8	+-Group8				
NumericDisplay3		486	414	Numeric Display	{PCU-1\FI-302C-1}
				Numeric Display: Color Control	NOT ({PCU-1\FI-302C-1_A} OR {PCU-1\FAL-P3100A})
NumericDisplay4		565	213	Numeric Display	{PCU-1\TI-302C-2}
				Numeric Display: Color Control	NOT {PCU-1\TI-302C-2_A}
NumericDisplay5		325	236	Numeric Display	{PCU-1\FIQ-302C-2L}+({PCU-1\FIQ-302C-2H}*1000)
Group10	++Group10	13	519		
Group10	|	13	519	Group: Touch Control: Press Action	ABORT
					Display 02help
Group9	| ++Group9	13	519		
Group9	| |	13	519	Group: Touch Control: Press Action	Abort
					Display 02HELP
Group9	| +-Group9				
Group10	+-Group10				
StringDisplay1		9	2	String Display	system\DateAndTimeString
Group14	++Group14	328	261		
Group14	|	328	261	Group: Touch Control: Press Action	PB_INDICATOR = 3
					DISPLAY PB_ACK /U /TPCU-1\HS-302C-2R /CL
	|			Group: Visibility Control	SECURITY >= 1
Rectangle	|	330	263	Rectangle: Color Control	PB_INDICATOR == 3
Group14	+-Group14				
Group16	++Group16	193	25		
Group16	|	193	25	Group: Touch Control: Press Action	ABORT *
					Display 03almsmc
	|			Group: Visibility Control	SECURITY >= 1
Group16	+-Group16				
Group18	++Group18	193	25		
Group18	|	193	25	Group: Touch Control: Press Action	Display 03almsmv
	|			Group: Visibility Control	SECURITY >= 1
Group18	+-Group18				
NumericDisplay6		263	236	Numeric Display	{PCU-1\FIC-302C-2}
				Numeric Display: Color Control	NOT {PCU-1\FIC-302C-2_A}
Group53	++Group53	435	447		
Group53	|	435	447	Group: Color Control	if {PCU-1\LAL-302C1} then 2
					else if {PCU-1\FAL-P3100A} then 2
					else if {PCU-1\P-3100A3} then 1
					else if NOT {PCU-1\P-3100A3} then 0
					else 2
Group53	+-Group53				
Group55	++Group55	27	348		
Group55	|	27	348	Group: Touch Control: Press Action	DISPLAY CAUSTIC /Q1
Group55	+-Group55				
Button4		687	172	Button: "SY-101 TANK (C-F3)": Touch Control: Release Action	Display 11sy101
Button6		687	204	Button: "PCU2 (F5)": Touch Control: Release Action	Display 04divbox
Button7		687	188	Button: "SY-102 TANK (F3)": Touch Control: Release Action	Display 12sy102
Display Keys		x	x	Display Key: "CAUSTIC RATIO CONTROL": Press Action	Display Caustic /CR
				Display Key: "CAUSTIC RATIO CONTROL": Repeat Action	Display Caustic /CR
		x	x	Display Key: "FLUSH PUMP CONTROL": Press Action	Display Pmp3100a /CR
				Display Key: "FLUSH PUMP CONTROL": Repeat Action	Display Pmp3100a /CR
Display Commands		x	x	Startup Command	SCREEN_NUMBER = 13; PB_INDICATOR = 0
				Shutdown Command	

2.2.17.3 Database Tags Used by the Component

Tag Name	Tag Type	Tag Description
MAINTENANCE_STATION	Digital	OIT STATION SELECTION - TRUE=MAINTENANCE, FALSE=OPERATOR
PB_INDICATOR	Analog	VALUE INDICATING THE PUSHBUTTON BEING ACKNOWLEDGED
PCU-1\FAL-P3100A	Digital	FLUSH PUMP P-3100A LOW FLOW Y-90.1
PCU-1\FI-302C-1	Analog	FLUSH PUMP P-3100A OUTLET FLOW
PCU-1\FI-302C-1_A	Digital	PCU-1 INPUT ANALOG OVER OR UNDER RANGE ALARM
PCU-1\FIC-302C-2	Analog	INLET FLOW TO TANK TK-302-C LINE 4
PCU-1\FIC-302C-2_A	Digital	PCU-1 INPUT ANALOG OVER OR UNDER RANGE ALARM
PCU-1\FIQ-302C-2H	Analog	TOTALIZED INLET FLOW TO TANK TK-302-C HIGH PART
PCU-1\FIQ-302C-2L	Analog	TOTALIZED INLET FLOW TO TANK TK-302-C LOW PART
PCU-1\LAL-302C1	Digital	TANK TK-302C-1 LEVEL BIT Y-90.1
PCU-1\LI-302C-1	Analog	TANK TK-302-C LEVEL
PCU-1\LI-302C-1_A	Digital	PCU-1 INPUT ANALOG OVER OR UNDER RANGE ALARM

Tag Name	Tag Type	Tag Description
PCU-1\P-3100A3	Digital	FLUSH PUMP RUN CONTACT
PCU-1\TI-302C-1	Analog	TANK TK-302-C TEMPERATURE
PCU-1\TI-302C-1_A	Digital	PCU-1 INPUT THERMOCOUPLE OVER OR UNDER RANGE ALARM
PCU-1\TI-302C-2	Analog	FLUSH PUMP P-3100A OUTLET TEMP LINE 3 INCH
PCU-1\TI-302C-2_A	Digital	PCU-1 INPUT THERMOCOUPLE OVER OR UNDER RANGE ALARM
SCREEN_NUMBER	Analog	CURRENT SCREEN NUMBER (1 TO 12)
SECURITY	Analog	PRESENT SECURITY LEVEL
system\DateAndTimeString	String	System date and time string

2.2.18 Graphics\Display\Caustic

Caustic Ratio Entry Pop-Up

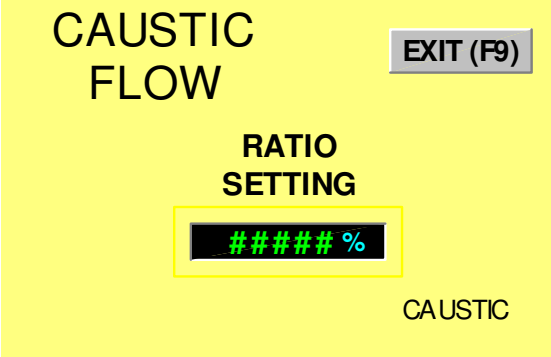

2.2.18.1 Display Settings

Section	Option	Selection
Properties	Display Type	On Top
	Allow Multiple Running Copies	No
	Cache after Displaying	Yes
	Title Bar	Yes "Caustic Ratio Entry Pop-Up"
	System Menu	No
	Minimize Button	No
	Maximize Button	No
	Size to Main Window at Runtime	No
	Show last Acquired Value	Yes
	Use Current Size	Yes
	Allow Display to be Resized	No
	Use Current Position	No (Position in Pixels: 350 x 300)
	Security Code	*
	Background Color	0x80FFFF
Behavior	Startup Command	PB_INDICATOR = 0
	Shutdown Command	
	Input Field Not Selected Text Color	0x0
	Input Field Not Selected Fill Color	0xFFFFFF
	Input Field Selected Text Color	0xFFFFFF
	Input Field Selected Fill Color	0x808000
	Beep on Press of Interactive Object	No
	Highlight when Cursor Passes Over Interactive Objects	Yes Highlight Color: 0x0
	Highlight Color of Objects with Input Focus	0x808080
	Display On-screen Keyboard	No

2.2.18.2 Animated Display Objects

Object Name	Grouping	X	Y	Property	Expression
Rectangle		72	86	Rectangle: Color Control	PB_INDICATOR == 4
Group2	++Group2	162	12		
Group2	|	162	12	Group: Touch Control: Press Action	Abort Caustic
Group2	+-Group2				
Group5	++Group5	79	93		
Group4	| ++Group4	79	93		
NumericDisplay1	| |	95	93	Numeric Display	{PCU-1\FR-302C-2} / 10.0
Group4	| +-Group4				
Rectangle	|	80	94	Rectangle: Touch Control: Press Action	PB_INDICATOR = 4 DISPLAY ENTRY /U /TPCU-1\FR-302C-2 /CR
	|			Rectangle: Visibility Control	SECURITY >= 1
Group5	+-Group5				
Display Commands		x	x	Startup Command Shutdown Command	PB_INDICATOR = 0

2.2.18.3 Database Tags Used by the Component

Tag Name	Tag Type	Tag Description
PB_INDICATOR	Analog	VALUE INDICATING THE PUSHBUTTON BEING ACKNOWLEDGED
PCU-1\FR-302C-2	Analog	CHEMICAL ADD PUMP P-3100B TO TANK TK-302-C % OF INLET FLOW REF FROM OIT
SECURITY	Analog	PRESENT SECURITY LEVEL

2.2.19 Graphics\Display\Entry

Analog Entry Pop-Up

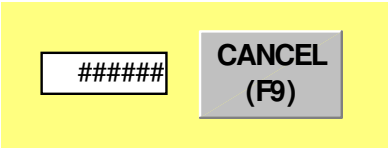

2.2.19.1 Display Settings

Section	Option	Selection
Properties	Display Type	On Top
	Allow Multiple Running Copies	No
	Cache after Displaying	No
	Title Bar	Yes "Analog Entry Pop-Up"
	System Menu	No
	Minimize Button	No
	Maximize Button	No
	Size to Main Window at Runtime	No
	Show last Acquired Value	Yes
	Use Current Size	Yes
	Allow Display to be Resized	No
	Use Current Position	No (Position in Pixels: 50 x 50)
	Security Code	*
	Background Color	0x80FFFF
Behavior	Startup Command	
	Shutdown Command	PB_INDICATOR = 0
	Input Field Not Selected Text Color	0x0
	Input Field Not Selected Fill Color	0xFFFFFF
	Input Field Selected Text Color	0xFFFFFF
	Input Field Selected Fill Color	0x8000
	Beep on Press of Interactive Object	No
	Highlight when Cursor Passes Over Interactive Objects	Yes Highlight Color: 0x0
	Highlight Color of Objects with Input Focus	0x808080
	Display On-screen Keyboard	No

2.2.19.2 Animated Display Objects

Object Name	Grouping	X	Y	Property	Expression
NumericInput1		17	21	Numeric Input	#1
Group2	++Group2	83	12		
Group2	|	83	12	Group: Touch Control: Press Action	Abort Entry
Group2	+-Group2				
Display Keys		x	x	Display Key: "EXIT": Press Action	&PB_INDICATOR = 0 Abort Display Entry
				Display Key: "EXIT": Repeat Action	&PB_INDICATOR = 0 Abort Display Entry

2.2.19.3 Database Tags Used by the Component

Tag Name	Tag Type	Tag Description
PB_INDICATOR	Analog	VALUE INDICATING THE PUSHBUTTON BEING ACKNOWLEDGED

2.2.20 Graphics\Display\Mov-2p-d

Two Position Motor Operated Drain Valve Pop-Up

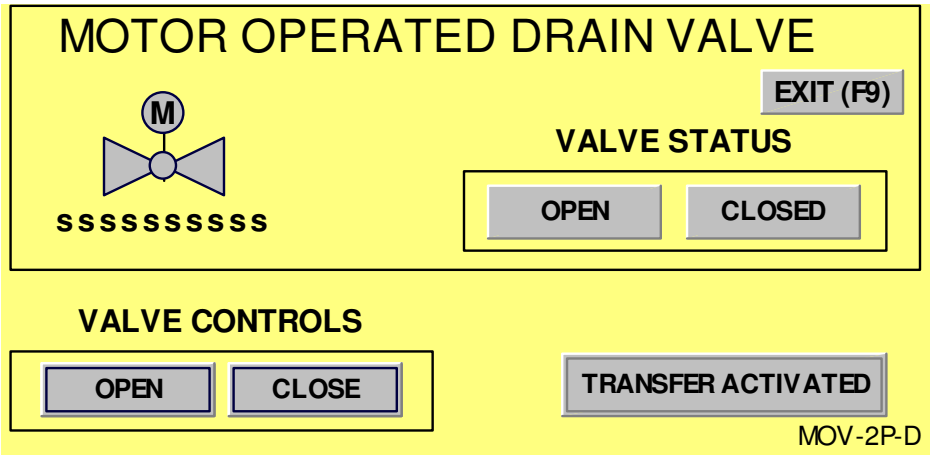

2.2.20.1 Display Settings

Section	Option	Selection
Properties	Display Type	On Top
	Allow Multiple Running Copies	No
	Cache after Displaying	No
	Title Bar	Yes "Two Position Motor Operated Drain Valve Pop-Up"
	System Menu	No
	Minimize Button	No
	Maximize Button	No
	Size to Main Window at Runtime	No
	Show last Acquired Value	Yes
	Use Current Size	Yes
	Allow Display to be Resized	No
	Use Current Position	No (Position in Pixels: 200 x 500)
	Security Code	*
	Background Color	0x80FFFF
Behavior	Startup Command	PB_INDICATOR = 0
	Shutdown Command	
	Input Field Not Selected Text Color	0x0
	Input Field Not Selected Fill Color	0xFFFFFF
	Input Field Selected Text Color	0xFFFFFF
	Input Field Selected Fill Color	0x8000
	Beep on Press of Interactive Object	No
	Highlight when Cursor Passes Over Interactive Objects	Yes Highlight Color: 0x0
	Highlight Color of Objects with Input Focus	0x808080
	Display On-screen Keyboard	No

2.2.20.2 Animated Display Objects

Object Name	Grouping	X	Y	Property	Expression
Group2	++Group2	317	28		
Group2	|	317	28	Group: Touch Control: Press Action	Abort Mov-2p-d
Group2	+-Group2				
Group4	++Group4	234	146		
Rectangle	|	236	148	Rectangle: Color Control	{PCU-3\TR_ON_1001} OR {PCU-3\TR_ON_1003} OR {PCU-3\TR_ON_1002A} OR {PCU-3\TR_ON_1002B}
Group4	+-Group4				
StringDisplay1		23	83	String Display	VALVE_NAME
Group5	++Group5	203	76		
Rectangle	|	205	78	Rectangle: Color Control	#3
Group5	+-Group5				
Group6	++Group6	286	76		
Rectangle	|	288	78	Rectangle: Color Control	#4
Group6	+-Group6				
Group17	++Group17	17	150		
Group14	| ++Group14	17	150		
Group14	| |	17	150	Group: Touch Control: Press Action	PB_INDICATOR = 1 DISPLAY PB_ACK /U /T#1 /CB
	| |			Group: Visibility Control	SECURITY >= 1
Rectangle	| |	19	152	Rectangle: Color Control	PB_INDICATOR == 1
Group14	| +-Group14				
Group16	| ++Group16	95	150		
Group16	| |	95	150	Group: Touch Control: Press Action	PB_INDICATOR = 2 DISPLAY PB_ACK /U /T#2 /CB
	| |			Group: Visibility Control	SECURITY >= 1

Object Name	Grouping	X	Y	Property	Expression
Rectangle	| |	97	152	Rectangle: Color Control	PB_INDICATOR == 2
Group16	| +-Group16				
Group17	+-Group17				
Display Commands		x	x	Startup Command Shutdown Command	PB_INDICATOR = 0

2.2.20.3 Database Tags Used by the Component

Tag Name	Tag Type	Tag Description
PB_INDICATOR	Analog	VALUE INDICATING THE PUSHBUTTON BEING ACKNOWLEDGED
PCU-3\TR_ON_1001	Digital	TRANSFER 1 INITIATED Y-41.1
PCU-3\TR_ON_1002A	Digital	TRANSFER 2A INITIATED Y-42.1
PCU-3\TR_ON_1002B	Digital	TRANSFER 2B INITIATED Y-43.1
PCU-3\TR_ON_1003	Digital	TRANSFER 3 INITIATED Y-44.1
SECURITY	Analog	PRESENT SECURITY LEVEL
VALVE_NAME	String	VALVE NAME FOR DISPLAY IN THE VALVE POP-UPS

2.2.21 Graphics\Display\Mov-2pos

Two Position Motor Operated Valve Pop-Up

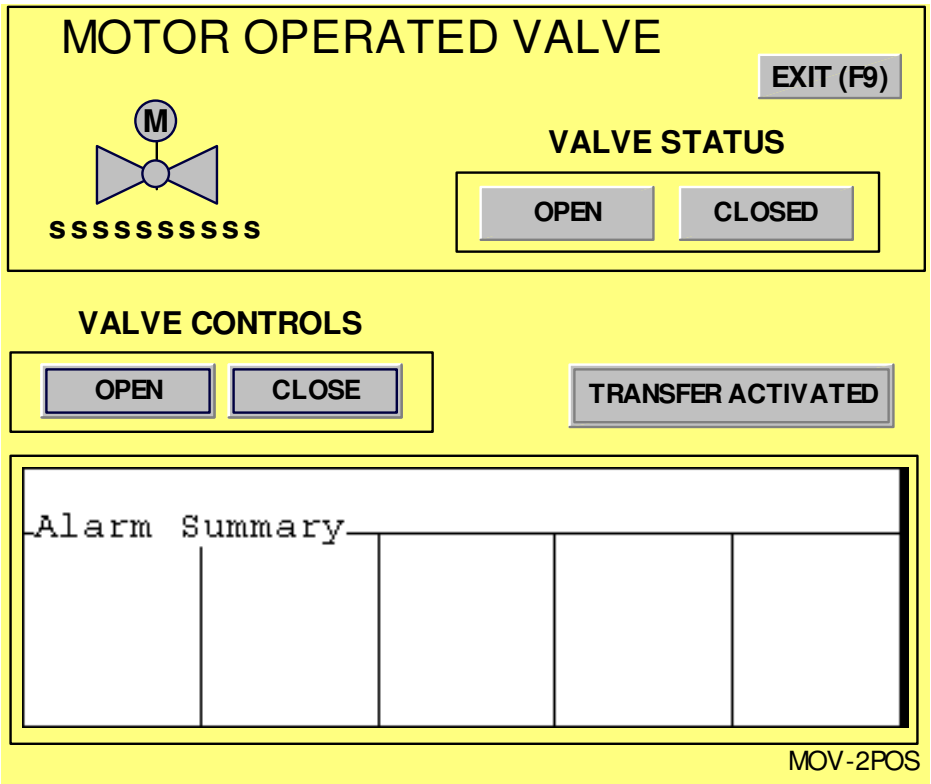

2.2.21.1 Display Settings

Section	Option	Selection
Properties	Display Type	On Top
	Allow Multiple Running Copies	No
	Cache after Displaying	No
	Title Bar	Yes "Two Position Motor Operated Valve Pop-Up"
	System Menu	No
	Minimize Button	No
	Maximize Button	No
	Size to Main Window at Runtime	No
	Show last Acquired Value	Yes
	Use Current Size	Yes
	Allow Display to be Resized	No
	Use Current Position	No (Position in Pixels: 200 x 400)
	Security Code	*
	Background Color	0x80FFFF
Behavior	Startup Command	PB_INDICATOR = 0
	Shutdown Command	
	Input Field Not Selected Text Color	0x0
	Input Field Not Selected Fill Color	0xFFFFFF
	Input Field Selected Text Color	0xFFFFFF
	Input Field Selected Fill Color	0x8000
	Beep on Press of Interactive Object	No
	Highlight when Cursor Passes Over Interactive Objects	Yes Highlight Color: 0x0
	Highlight Color of Objects with Input Focus	0x808080
	Display On-screen Keyboard	No

2.2.21.2 Animated Display Objects

Object Name	Grouping	X	Y	Property	Expression
Group2	++Group2	316	21		
Group2	|	316	21	Group: Touch Control: Press Action	Abort Mov-2pos
Group2	+-Group2				
Group3	++Group3	200	76		
Rectangle	|	202	78	Rectangle: Color Control	#3
Group3	+-Group3				
Group4	++Group4	283	76		
Rectangle	|	285	78	Rectangle: Color Control	#4
Group4	+-Group4				
StringDisplay1		20	85	String Display	VALVE_NAME

Object Name	Grouping	X	Y	Property	Expression
Group6	++Group6	237	150		
Rectangle	|	239	152	Rectangle: Color Control	{PCU-3\TR_ON_1001} OR {PCU-3\TR_ON_1003} OR {PCU-3\TR_ON_1002A} OR {PCU-3\TR_ON_1002B}
Group6	+-Group6				
Group17	++Group17	17	150		
Group14	| ++Group14	17	150		
Group14	| |	17	150	Group: Visibility Control	((SECURITY >= 1) AND (VALVE_NAME <> "MOV-3156A") AND (VALVE_NAME <> "MOV-3156B")) OR (SECURITY >= 2)
	| |			Group: Touch Control: Press Action	PB_INDICATOR = 1 DISPLAY PB_ACK /U /T#1 /CB
Rectangle	| |	19	152	Rectangle: Color Control	PB_INDICATOR == 1
Group14	| +-Group14				
Group16	| ++Group16	95	150		
Group16	| |	95	150	Group: Visibility Control	((SECURITY >= 1) AND (VALVE_NAME <> "MOV-3156A") AND (VALVE_NAME <> "MOV-3156B")) OR (SECURITY >= 2)
	| |			Group: Touch Control: Press Action	PB_INDICATOR = 2 DISPLAY PB_ACK /U /T#2 /CB
Rectangle	| |	97	152	Rectangle: Color Control	PB_INDICATOR == 2
Group16	| +-Group16				
Group17	+-Group17				
Display Commands		x	x	Startup Command Shutdown Command	PB_INDICATOR = 0

2.2.21.3 Database Tags Used by the Component

Tag Name	Tag Type	Tag Description
PB_INDICATOR	Analog	VALUE INDICATING THE PUSHBUTTON BEING ACKNOWLEDGED
PCU-3\TR_ON_1001	Digital	TRANSFER 1 INITIATED Y-41.1
PCU-3\TR_ON_1002A	Digital	TRANSFER 2A INITIATED Y-42.1
PCU-3\TR_ON_1002B	Digital	TRANSFER 2B INITIATED Y-43.1
PCU-3\TR_ON_1003	Digital	TRANSFER 3 INITIATED Y-44.1
SECURITY	Analog	PRESENT SECURITY LEVEL
VALVE_NAME	String	VALVE NAME FOR DISPLAY IN THE VALVE POP-UPS

2.2.22 Graphics\Display\Mov-3pos

Three Position Motor Operated Valve Pop-Up

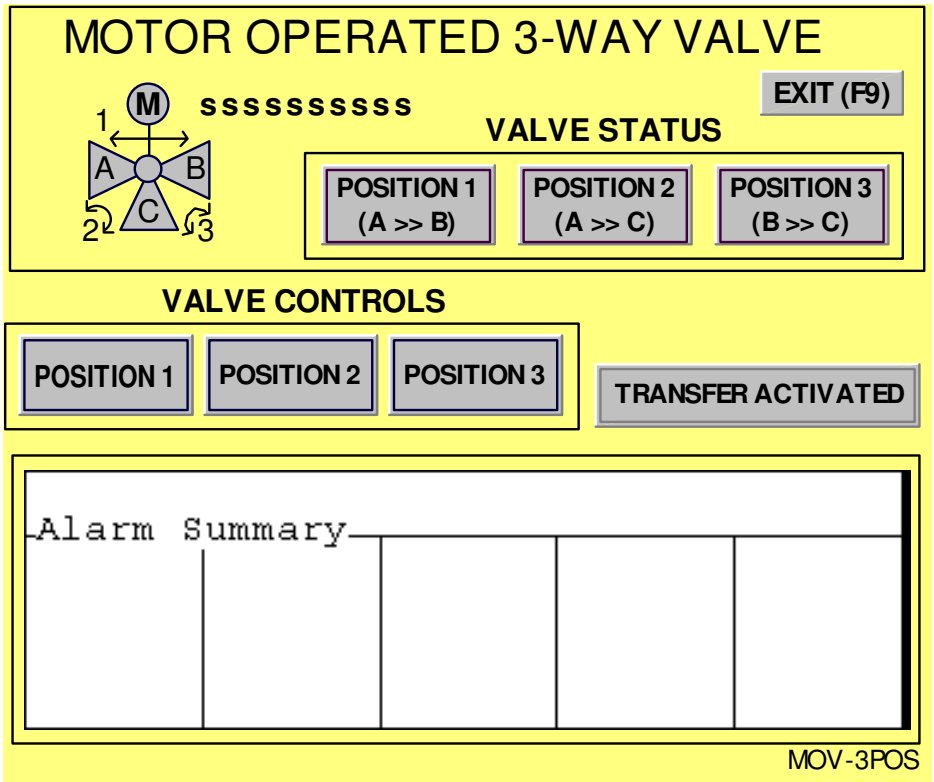

2.2.22.1 Display Settings

Section	Option	Selection
Properties	Display Type	On Top
	Allow Multiple Running Copies	No
	Cache after Displaying	No
	Title Bar	Yes "Three Position Motor Operated Valve Pop-Up"
	System Menu	No
	Minimize Button	No
	Maximize Button	No
	Size to Main Window at Runtime	No
	Show last Acquired Value	Yes
	Use Current Size	Yes
	Allow Display to be Resized	No
	Use Current Position	No (Position in Pixels: 200 x 400)
	Security Code	*
	Background Color	0x80FFFF
Behavior	Startup Command	PB_INDICATOR = 0
	Shutdown Command	
	Input Field Not Selected Text Color	0x0
	Input Field Not Selected Fill Color	0xFFFFFF
	Input Field Selected Text Color	0xFFFFFF
	Input Field Selected Fill Color	0x8000
	Beep on Press of Interactive Object	No
	Highlight when Cursor Passes Over Interactive Objects	Yes Highlight Color: 0x0
	Highlight Color of Objects with Input Focus	0x808080
	Display On-screen Keyboard	No

2.2.22.2 Animated Display Objects

Object Name	Grouping	X	Y	Property	Expression
Group8	++Group8	161	138		
Group8	|	161	138	Group: Touch Control: Press Action	PB_INDICATOR = 3 DISPLAY PB_ACK /U /T#3 /CB
	|			Group: Visibility Control	SECURITY >= 1
Rectangle	|	163	140	Rectangle: Color Control	PB_INDICATOR == 3
Group8	+-Group8				
Group10	++Group10	84	138		

Object Name	Grouping	X	Y	Property	Expression
Group10	|	84	138	Group: Touch Control: Press Action	PB_INDICATOR = 2 DISPLAY PB_ACK /U /T#2 /CB
	|			Group: Visibility Control	SECURITY >= 1
Rectangle	|	86	140	Rectangle: Color Control	PB_INDICATOR == 2
Group10	+-Group10				
Group12	++Group12	7	138		
Group12	|	7	138	Group: Touch Control: Press Action	PB_INDICATOR = 1 DISPLAY PB_ACK /U /T#1 /CB
	|			Group: Visibility Control	SECURITY >= 1
Rectangle	|	9	140	Rectangle: Color Control	PB_INDICATOR == 1
Group12	+-Group12				
StringDisplay1		82	34	String Display	VALVE_NAME
Group14	++Group14	247	150		
Rectangle	|	249	152	Rectangle: Color Control	{PCU-3\TR_ON_1001} OR {PCU-3\TR_ON_1003} OR {PCU-3\TR_ON_1002A} OR {PCU-3\TR_ON_1002B}
Group14	+-Group14				
Group16	++Group16	316	28		
Group16	|	316	28	Group: Touch Control: Press Action	Abort Mov-3pos
Group16	+-Group16				
Group18	++Group18	133	67		
Rectangle	|	135	69	Rectangle: Color Control	#4
Group18	+-Group18				
Group20	++Group20	215	67		
Rectangle	|	217	69	Rectangle: Color Control	#5
Group20	+-Group20				
Group22	++Group22	297	67		
Rectangle	|	299	69	Rectangle: Color Control	#6
Group22	+-Group22				
Group26	++Group26	33	33		
Polyline	|	49	69	Polyline: Color Control	If #5 AND NOT (#4 OR #6) Then 0 Else If #4 AND NOT (#5 OR #6) Then 0 Else If #6 AND NOT (#4 OR #5) Then 0 Else 0
Polyline	|	36	57	Polyline: Color Control	If #6 AND NOT (#4 OR #5) Then 0 Else If #4 AND NOT (#5 OR #6) Then 0 Else If #5 AND NOT (#4 OR #6) Then 0 Else 0
Polyline	|	61	57	Polyline: Color Control	If #4 AND NOT (#5 OR #6) Then 0 Else If #5 AND NOT (#4 OR #6) Then 0 Else If #6 AND NOT (#4 OR #5) Then 0 Else 0
Group26	+-Group26				
Display Commands		x	x	Startup Command Shutdown Command	PB_INDICATOR = 0

2.2.22.3 Database Tags Used by the Component

Tag Name	Tag Type	Tag Description
PB_INDICATOR	Analog	VALUE INDICATING THE PUSHBUTTON BEING ACKNOWLEDGED
PCU-3\TR_ON_1001	Digital	TRANSFER 1 INITIATED Y-41.1
PCU-3\TR_ON_1002A	Digital	TRANSFER 2A INITIATED Y-42.1
PCU-3\TR_ON_1002B	Digital	TRANSFER 2B INITIATED Y-43.1
PCU-3\TR_ON_1003	Digital	TRANSFER 3 INITIATED Y-44.1
SECURITY	Analog	PRESENT SECURITY LEVEL
VALVE_NAME	String	VALVE NAME FOR DISPLAY IN THE VALVE POP-UPS

2.2.23 Graphics\Display\Pb_ack

Pushbutton Acknowledge

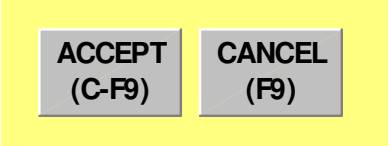

2.2.23.1 Display Settings

Section	Option	Selection
Properties	Display Type	On Top
	Allow Multiple Running Copies	No
	Cache after Displaying	No
	Title Bar	Yes "Pushbutton Acknowledge"
	System Menu	No
	Minimize Button	No
	Maximize Button	No
	Size to Main Window at Runtime	No
	Show last Acquired Value	Yes
	Use Current Size	Yes
	Allow Display to be Resized	No
	Use Current Position	No (Position in Pixels: 50 x 50)
	Security Code	*
	Background Color	0x80FFFF
Behavior	Startup Command	
	Shutdown Command	PB_INDICATOR = 0
	Input Field Not Selected Text Color	0x0
	Input Field Not Selected Fill Color	0xFFFFFF
	Input Field Selected Text Color	0xFFFFFF
	Input Field Selected Fill Color	0x8000
	Beep on Press of Interactive Object	No
	Highlight when Cursor Passes Over Interactive Objects	Yes Highlight Color: 0x0
	Highlight Color of Objects with Input Focus	0x808080
	Display On-screen Keyboard	No

2.2.23.2 Animated Display Objects

Object Name	Grouping	X	Y	Property	Expression
Group2	++Group2	16	12		
Group2	|	16	12	Group: Touch Control: Press Action	#1 = 1 Abort Pb_ack
Group2	+-Group2				
Group4	++Group4	83	12		
Group4	|	83	12	Group: Touch Control: Press Action	Abort Pb_ack
Group4	+-Group4				
Display Keys		x	x	Display Key: "CANCEL": Press Action	&PB_INDICATOR = 0 #1 = 0 Abort Display Pb_ack
				Display Key: "CANCEL": Repeat Action	&PB_INDICATOR = 0 #1 = 0 Abort Display Pb_ack
		x	x	Display Key: "ACCEPT": Press Action	&PB_INDICATOR = 0 #1 = 1 Abort Display Pb_ack
				Display Key: "ACCEPT": Repeat Action	&PB_INDICATOR = 0 #1 = 1 Abort Display Pb_ack

2.2.23.3 Database Tags Used by the Component

Tag Name	Tag Type	Tag Description
PB_INDICATOR	Analog	VALUE INDICATING THE PUSHBUTTON BEING ACKNOWLEDGED

2.2.24 Graphics\Display\Pmp3100a

Flush Pump Popup

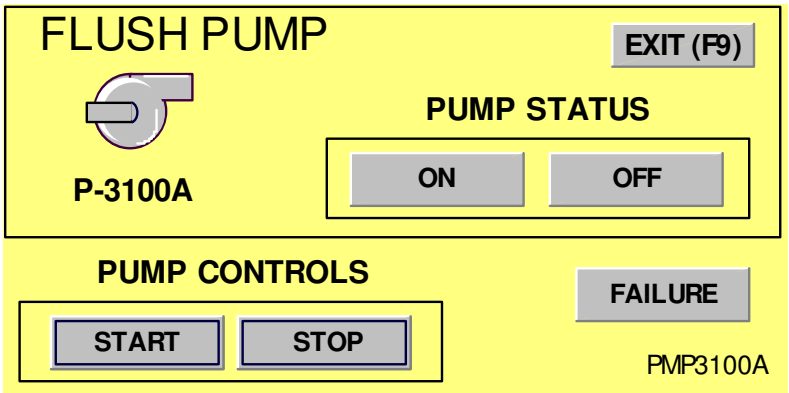

2.2.24.1 Display Settings

Section	Option	Selection
Properties	Display Type	On Top
	Allow Multiple Running Copies	No
	Cache after Displaying	Yes
	Title Bar	Yes "Flush Pump Popup"
	System Menu	No
	Minimize Button	No
	Maximize Button	No
	Size to Main Window at Runtime	No
	Show last Acquired Value	Yes
	Use Current Size	Yes
	Allow Display to be Resized	No
	Use Current Position	No (Position in Pixels: 250 x 500)
	Security Code	*
	Background Color	0x80FFFF
Behavior	Startup Command	PB_INDICATOR = 0
	Shutdown Command	
	Input Field Not Selected Text Color	0x0
	Input Field Not Selected Fill Color	0xFFFFFF
	Input Field Selected Text Color	0xFFFFFF
	Input Field Selected Fill Color	0x808000
	Beep on Press of Interactive Object	No
	Highlight when Cursor Passes Over Interactive Objects	Yes Highlight Color: 0x0
	Highlight Color of Objects with Input Focus	0x808080
	Display On-screen Keyboard	No

2.2.24.2 Animated Display Objects

Object Name	Grouping	X	Y	Property	Expression
Group6	++Group6	254	8		
Group6	|	254	8	Group: Touch Control: Press Action	Abort Pmp3100a
Group6	+-Group6				
Group10	++Group10	145	62		
Rectangle	|	147	64	Rectangle: Color Control	{PCU-1\P-3100A3}
Group10	+-Group10				
Group11	++Group11	228	62		
Rectangle	|	230	64	Rectangle: Color Control	NOT {PCU-1\P-3100A3}
Group11	+-Group11				
Group13	++Group13	98	130		
Group13	|	98	130	Group: Touch Control: Press Action	PB_INDICATOR = 2 DISPLAY PB_ACK /U /TPCU-1\HS-3100A2 /CR
	|			Group: Visibility Control	SECURITY >= 1
Rectangle	|	100	132	Rectangle: Color Control	PB_INDICATOR == 2
Group13	+-Group13				
Group15	++Group15	20	130		
Group15	|	20	130	Group: Touch Control: Press Action	PB_INDICATOR = 1 DISPLAY PB_ACK /U /TPCU-1\HS-3100A1 /CR
	|			Group: Visibility Control	SECURITY >= 1
Rectangle	|	22	132	Rectangle: Color Control	PB_INDICATOR == 1
Group15	+-Group15				
Group16	++Group16	239	110		
Rectangle	|	241	112	Rectangle: Color Control	{PCU-1\FAL-P3100A} OR {PCU-1\LAL-302C1}
Group16	+-Group16				
Display Commands		x	x	Startup Command Shutdown Command	PB_INDICATOR = 0

2.2.24.3 Database Tags Used by the Component

Tag Name	Tag Type	Tag Description
PB_INDICATOR	Analog	VALUE INDICATING THE PUSHBUTTON BEING ACKNOWLEDGED
PCU-1\FAL-P3100A	Digital	FLUSH PUMP P-3100A LOW FLOW Y-90.1
PCU-1\LAL-302C1	Digital	TANK TK-302C-1 LEVEL BIT Y-90.1
PCU-1\P-3100A3	Digital	FLUSH PUMP RUN CONTACT
SECURITY	Analog	PRESENT SECURITY LEVEL

2.2.25 Graphics\Display\Pmp350pid

Transfer Pump Popup

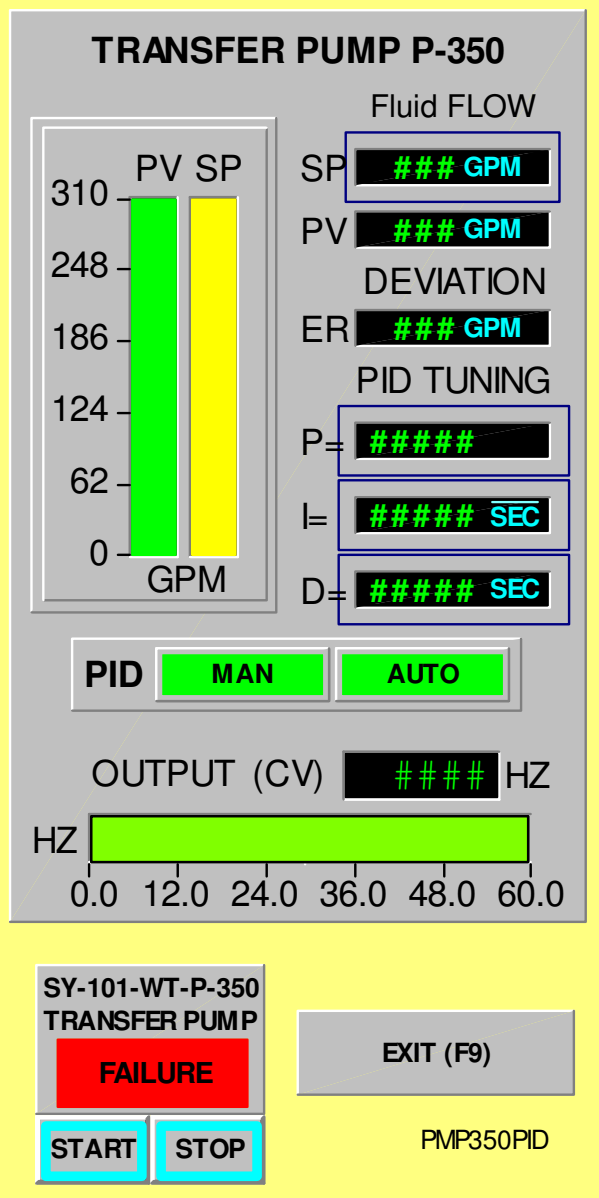

2.2.25.1 Display Settings

Section	Option	Selection
Properties	Display Type	On Top
	Allow Multiple Running Copies	No
	Cache after Displaying	Yes
	Title Bar	Yes "Transfer Pump Popup"
	System Menu	No
	Minimize Button	No
	Maximize Button	No
	Size to Main Window at Runtime	No
	Show last Acquired Value	Yes
	Use Current Size	No (Size in Pixels: 250 x 500)
	Allow Display to be Resized	No
	Use Current Position	No (Position in Pixels: 0 x 20)
	Security Code	*
	Background Color	0x80FFFF
Behavior	Startup Command	PB_INDICATOR = 0
	Shutdown Command	
	Input Field Not Selected Text Color	0x0
	Input Field Not Selected Fill Color	0xC0C0C0

Section	Option	Selection
	Input Field Selected Text Color	0x0
	Input Field Selected Fill Color	0xC0C0C0
	Beep on Press of Interactive Object	No
	Highlight when Cursor Passes Over Interactive Objects	Yes Highlight Color: 0x0
	Highlight Color of Objects with Input Focus	0x808080
	Display On-screen Keyboard	No

2.2.25.2 Animated Display Objects

Object Name	Grouping	X	Y	Property	Expression
Group37	++Group37	30	266		
Group104	| ++Group104	140	270		
Rectangle	| |	142	272	Rectangle: Visibility Control	{PCU-2\HS-3125-M} <> 1
Group104	| +-Group104				
Group106	| ++Group106	65	270		
Rectangle	| |	67	272	Rectangle: Visibility Control	{PCU-2\HS-3125-M} == 1
Group106	| +-Group106				
Group109	| ++Group109	65	270		
Group109	| |	65	270	Group: Visibility Control	(SECURITY >= 2)
Group107	| | ++Group107	65	270		
Group107	| | |	65	270	Group: Touch Control: Press Action	PCU-1\HS-3101-M = 1
Group107	| | +-Group107				
Group108	| | ++Group108	140	270		
Group108	| | |	140	270	Group: Touch Control: Press Action	PCU-1\HS-3101-M = 0
Group108	| | +-Group108				
Rectangle	| |	142	272	Rectangle: Visibility Control	{PCU-1\HS-3101-M} <> 1
Rectangle	| |	67	272	Rectangle: Visibility Control	{PCU-1\HS-3101-M} == 1
Group109	| +-Group109				
Group37	+-Group37				
Group79	++Group79	124	421		
Group79	|	124	421	Group: Touch Control: Press Action	Abort Pmp350pid
Group79	+-Group79				
Group34	++Group34	13	313		
NumericDisplay19	|	163	314	Numeric Display	{PCU-2\FIC-3125-O}
Group87	| ++Group87	29	314		
Group86	| | ++Group86	38	340		
Rectangle	| | |	38	340	Rectangle: Fill Control	{PCU-2\FIC-3125-O}
Group86	| | +-Group86				
Group87	| +-Group87				
Group34	+-Group34				
Group36	++Group36	13	37		
Rectangle	|	141	169	Rectangle: Color Control	PB_INDICATOR == 4
Group112	| ++Group112	148	176		
Group111	| | ++Group111	148	176		
NumericDisplay21	| | |	154	176	Numeric Display	{PCU-2\PID-3125-KP} / 100.0
Group111	| | +-Group111				
Rectangle	| |	149	177	Rectangle: Touch Control: Press Action	PB_INDICATOR = 4 DISPLAY ENTRY /U /TPCU-1\PID-3101-KP /CB
	| |			Rectangle: Visibility Control	(SECURITY >= 3)
Group112	| +-Group112				
Rectangle	|	141	231	Rectangle: Color Control	PB_INDICATOR == 6
Group115	| ++Group115	148	238		
Group114	| | ++Group114	148	238		
NumericDisplay22	| | |	154	238	Numeric Display	{PCU-2\PID-3125-KD} / 100.0
Group114	| | +-Group114				
Rectangle	| |	149	239	Rectangle: Touch Control: Press Action	PB_INDICATOR = 6 DISPLAY ENTRY /U /TPCU-1\PID-3101-KD /CB
	| |			Rectangle: Visibility Control	(SECURITY >= 3)
Group115	| +-Group115				
Rectangle	|	141	200	Rectangle: Color Control	PB_INDICATOR == 5
Group118	| ++Group118	148	207		
Group117	| | ++Group117	148	207		
NumericDisplay23	| | |	154	207	Numeric Display	{PCU-2\PID-3125-KI} / 100.0
Group117	| | +-Group117				
Rectangle	| |	149	208	Rectangle: Touch Control: Press Action	PB_INDICATOR = 5 DISPLAY ENTRY /U /TPCU-1\PID-3101-KI /CB
	| |			Rectangle: Visibility Control	(SECURITY >= 3)
Group118	| +-Group118				
Group35	| ++Group35	125	37		
Group14	| | ++Group14	144	55		
Rectangle	| | |	144	55	Rectangle: Color Control	PB_INDICATOR == 3
Group68	| | | ++Group68	148	62		
Group67	| | | | ++Group67	148	62		
NumericDisplay18	| | | | |	164	62	Numeric Display	{PCU-2\PID-3125-FR}
Group67	| | | | +-Group67				
Rectangle	| | | |	149	63	Rectangle: Touch Control: Press Action	PB_INDICATOR = 3 DISPLAY ENTRY /U /TPCU-1\PID-3101-FR /CB
	| | | |			Rectangle: Visibility Control	(SECURITY >= 1)
Group68	| | | +-Group68				
Group14	| | +-Group14				
Group11	| | ++Group11	148	88		
NumericDisplay9	| | |	164	88	Numeric Display	{PCU-2\FIC-3125}
Group11	| | +-Group11				
Group35	| +-Group35				
Group30	| ++Group30	148	129		
NumericDisplay1	| |	164	129	Numeric Display	{PCU-2\FIC-3125-E}

Object Name	Grouping	X	Y	Property	Expression
Group30	| +-Group30				
Group26	| ++Group26	13	49		
Rectangle	| |	55	83	Rectangle: Fill Control	{PCU-1\FI-367A}
Rectangle	| |	80	83	Rectangle: Fill Control	{PCU-1\PID-3101-FR}
Group26	| +-Group26				
Group36	+-Group36				
Group2	++Group2	24	433		
Group2	|	24	433	Group: Visibility Control	{PCU-1\P-101R}
Group2	+-Group2				
Group33	++Group33	24	433		
Group33	|	24	433	Group: Visibility Control	{PCU-1\P-101R}
Group33	+-Group33				
Group4	++Group4	24	433		
Group4	|	24	433	Group: Visibility Control	{PCU-1\XA-350}
Group4	+-Group4				
Group53	++Group53	63	465		
Button8	|	63	465	Button: "STOP": Touch Control: Press Action	PB_INDICATOR = 2; DISPLAY PB_ACK /U /TPCU-1\HS-3101B /CL
	|			Button: "STOP": Visibility Control	(SECURITY >= 1) AND ({PCU-3\MD_SL_101} OR {PCU-3\MD_SU_101}) AND {PCU-1\P-101E}
Rectangle	|	65	467	Rectangle: Visibility Control	(PB_INDICATOR == 2) AND system\BlinkSlow
Group53	+-Group53				
Group52	++Group52	15	465		
Button2	|	15	465	Button: "START": Touch Control: Press Action	PB_INDICATOR = 1; DISPLAY PB_ACK /U /TPCU-1\HS-3101A /CL
	|			Button: "START": Visibility Control	(SECURITY >= 1) AND ({PCU-3\MD_SL_101} OR {PCU-3\MD_SU_101}) AND {PCU-1\P-101E}
Rectangle	|	17	467	Rectangle: Visibility Control	(PB_INDICATOR == 1) AND system\BlinkSlow
Group52	+-Group52				
Display Commands		x	x	Startup Command Shutdown Command	PB_INDICATOR = 0

2.2.25.3 Database Tags Used by the Component

Tag Name	Tag Type	Tag Description
PB_INDICATOR	Analog	VALUE INDICATING THE PUSHBUTTON BEING ACKNOWLEDGED
PCU-1\FI-367A	Analog	SY-101-WT-P-350 TRANSFER PUMP DISCHARGE FLOW
PCU-1\HS-3101-M	Digital	PID FOR PUMP SY-101-WT-P-350 MANUAL MODE
PCU-1\P-101E	Digital	TRANSFER PUMP SY-101-WT-P-350 ENABLED
PCU-1\P-101R	Digital	TRANSFER PUMP SY-101-WT-P-350 RUNNING
PCU-1\PID-3101-FR	Analog	TRANSFER PUMP SY-101-WT-P-350 FLOW SETPOINT REF FROM OIT
PCU-1\XA-350	Digital	SY-101-WT-P-350 TRANSFER PUMP FAILURE
PCU-2\FIC-3125	Analog	PUMP P-3125 A/B OUTLET FLOW
PCU-2\FIC-3125-E	Analog	PUMP P-3125 A/B PID CONTROL ERROR
PCU-2\FIC-3125-O	Analog	PUMP P-3125 A/B OUTLET FLOW / DRIVE SPEED REF OUTPUT
PCU-2\HS-3125-M	Digital	PID FOR PUMP P-3125 A/B MANUAL MODE
PCU-2\PID-3125-FR	Analog	PUMP P-3125 A/B OUTLET FLOW REFERENCE FROM OIT
PCU-2\PID-3125-KD	Analog	PUMP P-3125 A/B PID CONTROL DERIV. GAIN FROM OIT
PCU-2\PID-3125-KI	Analog	PUMP P-3125 A/B PID CONTROL INTEG. GAIN FROM OIT
PCU-2\PID-3125-KP	Analog	PUMP P-3125 A/B PID CONTROL PROP. GAIN FROM OIT
PCU-3\MD_SL_101	Digital	SLURRY MODE TRANSFER FROM SY101 SELECTED
PCU-3\MD_SU_101	Digital	SUPERNATE MOVE TRANSFER FROM SY101 SELECTED
SECURITY	Analog	PRESENT SECURITY LEVEL
system\BlinkSlow	Digital	Changes every 500 ms

2.2.26 Graphics\Display\Sov-2pos

Two Position Solenoid Valve Pop-Up

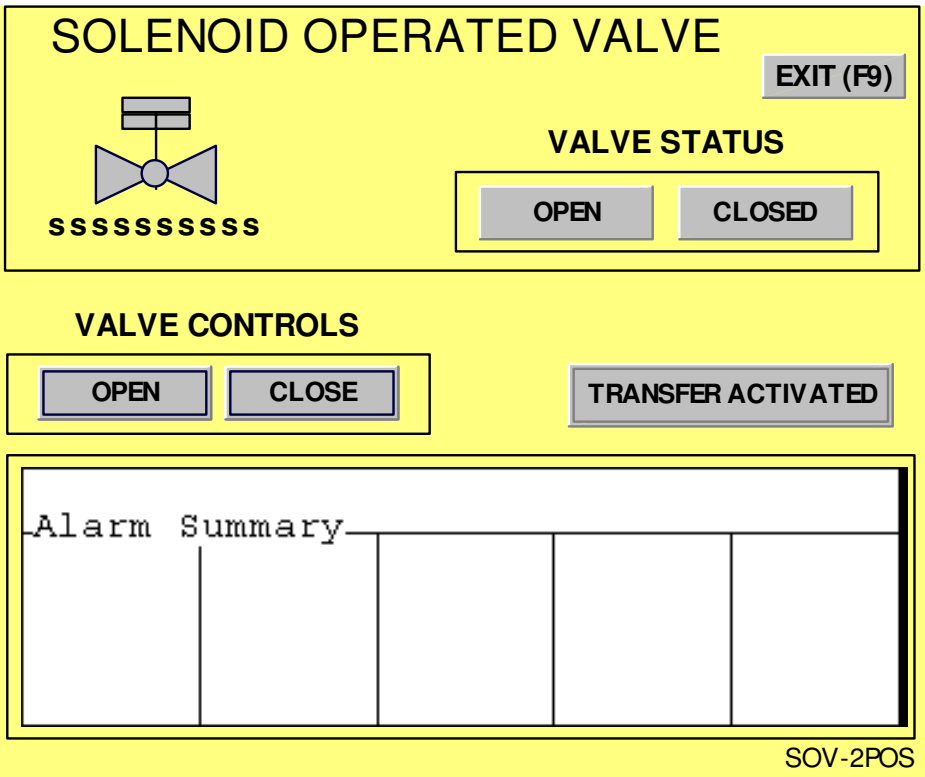

2.2.26.1 Display Settings

Section	Option	Selection
Properties	Display Type	On Top
	Allow Multiple Running Copies	No
	Cache after Displaying	No
	Title Bar	Yes "Two Position Solenoid Valve Pop-Up"
	System Menu	No
	Minimize Button	No
	Maximize Button	No
	Size to Main Window at Runtime	No
	Show last Acquired Value	Yes
	Use Current Size	Yes
	Allow Display to be Resized	No
	Use Current Position	No (Position in Pixels: 200 x 400)
	Security Code	*
	Background Color	0x80FFFF
Behavior	Startup Command	PB_INDICATOR = 0
	Shutdown Command	
	Input Field Not Selected Text Color	0x0
	Input Field Not Selected Fill Color	0xFFFFFF
	Input Field Selected Text Color	0xFFFFFF
	Input Field Selected Fill Color	0x808000
	Beep on Press of Interactive Object	No
	Highlight when Cursor Passes Over Interactive Objects	Yes Highlight Color: 0x0
	Highlight Color of Objects with Input Focus	0x808080
	Display On-screen Keyboard	No

2.2.26.2 Animated Display Objects

Object Name	Grouping	X	Y	Property	Expression
Group2	++Group2	318	20		
Group2	|	318	20	Group: Touch Control: Press Action	Abort Sov-2pos
Group2	+-Group2				
StringDisplay1		20	83	String Display	VALVE_NAME
Group3	++Group3	200	75		
Rectangle	|	202	77	Rectangle: Color Control	#3
Group3	+-Group3				
Group4	++Group4	283	75		
Rectangle	|	285	77	Rectangle: Color Control	#4
Group4	+-Group4				

Object Name	Grouping	X	Y	Property	Expression
Group6	++Group6	237	149		
Rectangle	|	239	151	Rectangle: Color Control	{PCU-3\TR_ON_1001} OR {PCU-3\TR_ON_1003} OR {PCU-3\TR_ON_1002A} OR {PCU-3\TR_ON_1002B}
Group6	+-Group6				
Group18	++Group18	16	150		
Group15	| ++Group15	16	150		
Group15	| |	16	150	Group: Touch Control: Press Action	PB_INDICATOR = 1 DISPLAY PB_ACK /U /T#1 /CB
	| |			Group: Visibility Control	SECURITY >= 1
Rectangle	| |	18	152	Rectangle: Color Control	PB_INDICATOR == 1
Group15	| +-Group15				
Group17	| ++Group17	94	150		
Group17	| |	94	150	Group: Touch Control: Press Action	PB_INDICATOR = 2 DISPLAY PB_ACK /U /T#2 /CB
	| |			Group: Visibility Control	SECURITY >= 1
Rectangle	| |	96	152	Rectangle: Color Control	PB_INDICATOR == 2
Group17	| +-Group17				
Group18	+-Group18				
Display Commands		x	x	Startup Command Shutdown Command	PB_INDICATOR = 0

2.2.26.3 Database Tags Used by the Component

Tag Name	Tag Type	Tag Description
PB_INDICATOR	Analog	VALUE INDICATING THE PUSHBUTTON BEING ACKNOWLEDGED
PCU-3\TR_ON_1001	Digital	TRANSFER 1 INITIATED Y-41.1
PCU-3\TR_ON_1002A	Digital	TRANSFER 2A INITIATED Y-42.1
PCU-3\TR_ON_1002B	Digital	TRANSFER 2B INITIATED Y-43.1
PCU-3\TR_ON_1003	Digital	TRANSFER 3 INITIATED Y-44.1
SECURITY	Analog	PRESENT SECURITY LEVEL
VALVE_NAME	String	VALVE NAME FOR DISPLAY IN THE VALVE POP-UPS

2.2.27 Graphics\Display\Test

HANFORD CROSS SITE TRANSFER SYSTEM - TEST AND DEMONSTRATION DISPLAY

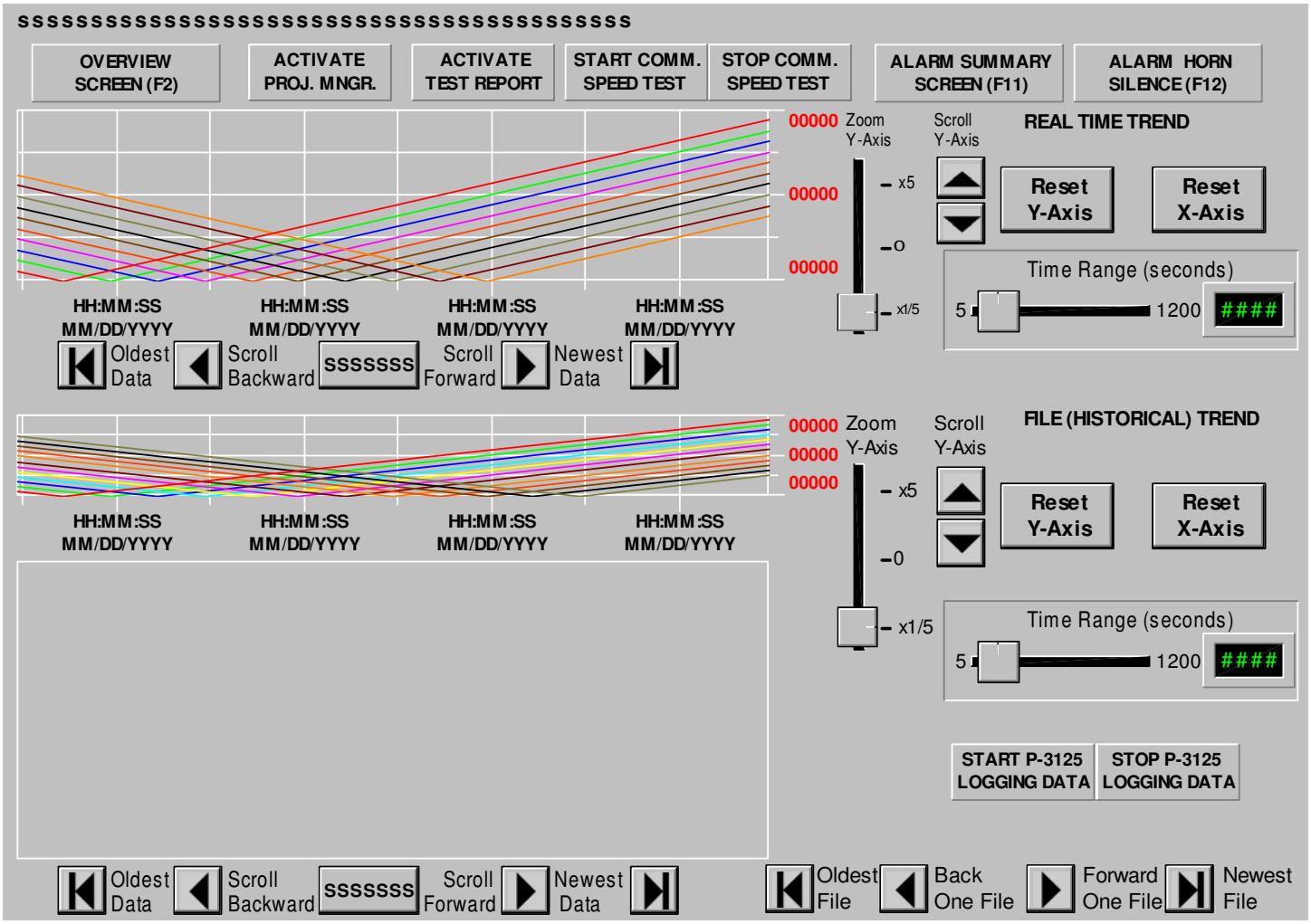

2.2.27.1 Display Settings

Section	Option	Selection
Properties	Display Type	Overlay
	Allow Multiple Running Copies	No
	Cache after Displaying	No
	Title Bar	Yes "HANFORD CROSS SITE TRANSFER SYSTEM - TEST AND DEMONSTRATION DISPLAY"
	System Menu	No
	Minimize Button	No
	Maximize Button	No
	Size to Main Window at Runtime	Yes
	Show last Acquired Value	Yes
	Use Current Size	No (Size in Pixels: 800 x 562)
	Allow Display to be Resized	No
	Use Current Position	No (Position in Pixels: 0 x 0)
	Security Code	*
	Background Color	0xC0C0C0
Behavior	Startup Command	
	Shutdown Command	
	Input Field Not Selected Text Color	0x0
	Input Field Not Selected Fill Color	0xFFFFFF
	Input Field Selected Text Color	0xFFFFFF
	Input Field Selected Fill Color	0x8000
	Beep on Press of Interactive Object	No
	Highlight when Cursor Passes Over Interactive Objects	Yes Highlight Color: 0x0
	Highlight Color of Objects with Input Focus	0xFF00
	Display On-screen Keyboard	No

2.2.27.2 Animated Display Objects

Object Name	Grouping	X	Y	Property	Expression
Trend		9	65	Trend: Control Tag	Trnd_tr
				Trend: "PCU-1\FI-302C-1"	PCU-2\FIC-3125
				Trend: "PCU-1\FIC-302C-2"	PCU-2\FIC-3125A
				Trend: "PCU-1\II-3102"	PCU-2\FIC-3125B
				Trend: Pen4	PCU-2\FIC-3125-E
				Trend: "PCU-2\VI-3125A1"	PCU-2\VI-3125A1
				Trend: "PCU-2\VI-3125A2"	PCU-2\VI-3125A2
				Trend: "PCU-2\VI-3125B1"	PCU-2\VI-3125B1
				Trend: "PCU-2\VI-3125B2"	PCU-2\VI-3125B2
				Trend: "PCU-2\SI-3125A"	PCU-2\SI-3125A
				Trend: "PCU-2\SI-3125B"	PCU-2\SI-3125B
Group5	++Group5	251	25		
Group4	| ++Group4	251	25		
Group4	| |	251	25	Group: Touch Control: Press Action	AppStart C:\MSOFFICE\EXCEL\EXCEL.EXE C:\CR_SITE\OIT\CROSSITE\DLGLOG\R_TRANSF\RPTDEMO.XLS
	| |			Group: Visibility Control	SECURITY >= 1
Group4	| +-Group4				
Group5	+-Group5				
StringDisplay1		9	2	String Display	system\DateAndTimeString
Group7	++Group7	535	25		
Group7	|	535	25	Group: Touch Control: Press Action	ABORT Display 03almsum
Group7	+-Group7				
Group9	++Group9	657	25		
Group9	|	657	25	Group: Touch Control: Press Action	SilenceAll
	|			Group: Visibility Control	MAINTENANCE_STATION == 0
Group9	+-Group9				
Group18	++Group18	345	25		
Group11	| ++Group11	433	25		
Group11	| |	433	25	Group: Visibility Control	MAINTENANCE_STATION == 1
Group11	| +-Group11				
Group13	| ++Group13	433	25		
Group13	| |	433	25	Group: Touch Control: Press Action	TEST_1 = 0
	| |			Group: Visibility Control	(MAINTENANCE_STATION == 1) AND (SECURITY >= 1)
Group13	| +-Group13				
Group15	| ++Group15	345	25		
Group15	| |	345	25	Group: Visibility Control	MAINTENANCE_STATION == 1
Group15	| +-Group15				
Group17	| ++Group17	345	25		
Group17	| |	345	25	Group: Touch Control: Press Action	TEST_1 = 1
	| |			Group: Visibility Control	(MAINTENANCE_STATION == 1) AND (SECURITY >= 1)
Group17	| +-Group17				
Group18	+-Group18				
Group22	++Group22	151	25		
Group22	|	151	25	Group: Touch Control: Press Action	Project
	|			Group: Visibility Control	SECURITY >= 3
Group22	+-Group22				
Group24	++Group24	18	25		
Group24	|	18	25	Group: Touch Control: Press Action	Abort * Display 01overvw
Group24	+-Group24				
Trend		9	252	Trend: Control Tag	Trnd_tf
				Trend: "PCU-2\FIC-3125"	PCU-2\FIC-3125
				Trend: "PCU-2\FIC-3125A"	PCU-2\FIC-3125A
				Trend: "PCU-2\FIC-3125B"	PCU-2\FIC-3125B
				Trend: "PCU-2\FIC-3125-E"	PCU-2\FIC-3125-E
				Trend: "PCU-2\PI-3125C"	PCU-2\PI-3125C
				Trend: "PCU-2\PI-3125D"	PCU-2\PI-3125D
				Trend: "PCU-2\SI-3125A"	PCU-2\SI-3125A
				Trend: "PCU-2\SI-3125B"	PCU-2\SI-3125B
				Trend: "PCU-2\VI-3125A1"	PCU-2\VI-3125A1
				Trend: "PCU-2\VI-3125A2"	PCU-2\VI-3125A2
				Trend: "PCU-2\VI-3125B1"	PCU-2\VI-3125B1
				Trend: "PCU-2\VI-3125B2"	PCU-2\VI-3125B2
Group31	++Group31	512	65		
Group28	| ++Group28	512	95		
Group27	| | ++Group27	512	178		
Group27	| | |	512	178	Group: Vertical Slider	trnd_tr\ymag
Group27	| | +-Group27				
Group28	| +-Group28				
Group31	+-Group31				
Group32	++Group32	571	65		
Button1	|	573	94	Button: Touch Control: Press Action	trnd_tr\yoffset = trnd_tr\yoffset + 10
Button2	|	573	122	Button: Touch Control: Press Action	trnd_tr\yoffset = trnd_tr\yoffset - 10
Group32	+-Group32				
Button3		612	100	Button: "Reset	trnd_tr\yoffset=0
				Y-Axis": Touch Control: Press Action	trnd_tr\ymag=0
Group34	++Group34	34	207		
Button4	|	385	207	Button: Touch Control: Press Action	trnd_tr\starttime = trnd_tr\newesttime
Button5	|	306	207	Button: Touch Control: Press Action	trnd_tr\starttime = trnd_tr\starttime + trnd_tr\timerange
Button6	|	105	207	Button: Touch Control: Press Action	trnd_tr\starttime = trnd_tr\starttime - trnd_tr\timerange
Button7	|	34	207	Button: Touch Control: Press Action	trnd_tr\starttime = trnd_tr\oldesttime + trnd_tr\timerange
Group33	| ++Group33	194	207		

Object Name	Grouping	X	Y	Property	Expression
Button8	| |	194	207	Button Toggle	trnd_tr\paused
	| |			Button Toggle: Touch Control: Press Action	Toggle trnd_tr\paused
Label1	| |	197	215	Label: Status	trnd_tr\paused
Group33	| +-Group33				
Group34	+-Group34				
Button9		705	100	Button: "Reset	trnd_tr\timerange = 60
				X-Axis": Touch Control: Press Action	
Group42	++Group42	577	151		
Group38	| ++Group38	598	176		
Group38	| |	598	176	Group: Horizontal Slider	trnd_tr\timerange
Group38	| +-Group38				
Group41	| ++Group41	736	171		
NumericDisplay1	| |	747	180	Numeric Display	trnd_tr\timerange
Group41	| +-Group41				
Group42	+-Group42				
Group49	++Group49	512	250		
Group46	| ++Group46	512	282		
Group45	| | ++Group45	512	370		
Group45	| | |	512	370	Group: Vertical Slider	trnd_tf\ymag
Group45	| | +-Group45				
Group46	| +-Group46				
Group49	+-Group49				
Group50	++Group50	571	250		
Button10	|	573	284	Button: Touch Control: Press Action	trnd_tf\yoffset = trnd_tf\yoffset + 10
Button11	|	573	316	Button: Touch Control: Press Action	trnd_tf\yoffset = trnd_tf\yoffset - 10
Group50	+-Group50				
Button12		612	294	Button: "Reset	trnd_tf\yoffset=0
				Y-Axis": Touch Control: Press Action	trnd_tf\ymag=0
Button13		705	294	Button: "Reset	trnd_tf\timerange = 60
				X-Axis": Touch Control: Press Action	
Group58	++Group58	577	366		
Group54	| ++Group54	598	391		
Group54	| |	598	391	Group: Horizontal Slider	trnd_tf\timerange
Group54	| +-Group54				
Group57	| ++Group57	736	386		
NumericDisplay2	| |	747	395	Numeric Display	trnd_tf\timerange
Group57	| +-Group57				
Group58	+-Group58				
Group60	++Group60	34	529		
Button14	|	385	529	Button: Touch Control: Press Action	trnd_tf\starttime = trnd_tf\newesttime
Button15	|	306	529	Button: Touch Control: Press Action	trnd_tf\starttime = trnd_tf\starttime + trnd_tf\timerange
Button16	|	105	529	Button: Touch Control: Press Action	trnd_tf\starttime = trnd_tf\starttime - trnd_tf\timerange
Button17	|	34	529	Button: Touch Control: Press Action	trnd_tf\starttime = trnd_tf\oldesttime + trnd_tf\timerange
Group59	| ++Group59	194	529		
Button18	| |	194	529	Button Toggle	trnd_tf\paused
	| |			Button Toggle: Touch Control: Press Action	Toggle trnd_tf\paused
Label2	| |	197	537	Label: Status	trnd_tf\paused
Group59	| +-Group59				
Group60	+-Group60				
Group61	++Group61	468	527		
Button19	|	713	528	Button: Touch Control: Press Action	trnd_tf\currentfile = trnd_tf\currentfile + trnd_tf\newestfile
Button20	|	628	528	Button: Touch Control: Press Action	trnd_tf\currentfile = trnd_tf\currentfile + 1
Button21	|	538	528	Button: Touch Control: Press Action	trnd_tf\currentfile = trnd_tf\currentfile - 1
Button22	|	468	528	Button: Touch Control: Press Action	trnd_tf\currentfile = trnd_tf\currentfile + trnd_tf\oldestfile
Group61	+-Group61				
Group70	++Group70	582	454		
Group63	| ++Group63	670	454		
Group63	| |	670	454	Group: Visibility Control	MAINTENANCE_STATION == 1
Group63	| +-Group63				
Group65	| ++Group65	671	454		
Group65	| |	671	454	Group: Touch Control: Press Action	DataLogOff P3125
	| |			Group: Visibility Control	(MAINTENANCE_STATION == 1) AND (SECURITY >= 1)
Group65	| +-Group65				
Group67	| ++Group67	582	454		
Group67	| |	582	454	Group: Visibility Control	MAINTENANCE_STATION == 1
Group67	| +-Group67				
Group69	| ++Group69	582	454		
Group69	| |	582	454	Group: Touch Control: Press Action	DataLogOn P3125
	| |			Group: Visibility Control	(MAINTENANCE_STATION == 1) AND (SECURITY >= 1)
Group69	| +-Group69				
Group70	+-Group70				

2.2.27.3 Database Tags Used by the Component

Tag Name	Tag Type	Tag Description
MAINTENANCE_STATION	Digital	OIT STATION SELECTION - TRUE=MAINTENANCE, FALSE=OPERATOR
PCU-2\FIC-3125	Analog	PUMP P-3125 A/B OUTLET FLOW
PCU-2\FIC-3125-E	Analog	PUMP P-3125 A/B PID CONTROL ERROR
PCU-2\FIC-3125A	Analog	PUMP P-3125A OUTLET FLOW CONTROL SIGNAL [DRIVE SPEED]
PCU-2\FIC-3125B	Analog	PUMP P-3125B OUTLET FLOW CONTROL SIGNAL [DRIVE SPEED]
PCU-2\PI-3125C	Analog	PUMP P-3125A OUTLET PRESSURE
PCU-2\PI-3125D	Analog	PUMP P-3125B OUTLET PRESSURE
PCU-2\SI-3125A	Analog	MOTOR SPEED PUMP P-3125A
PCU-2\SI-3125B	Analog	MOTOR SPEED PUMP P-3125B
PCU-2\VI-3125A1	Analog	PUMP P-3125A BEARING VIBRATION
PCU-2\VI-3125A2	Analog	PUMP P-3125A BEARING VIBRATION
PCU-2\VI-3125B1	Analog	PUMP P-3125B BEARING VIBRATION

Tag Name	Tag Type	Tag Description
PCU-2\VI-3125B2	Analog	PUMP P-3125B BEARING VIBRATION
SECURITY	Analog	PRESENT SECURITY LEVEL
system\DateAndTimeString	String	System date and time string
TEST_1	Digital	TEST HOLDING BIT
trnd_tf\currentfile	Analog	Current datalog file displayed by trend.
trnd_tf\newestfile	Analog	Offset to the newest data log file.
trnd_tf\newesttime	Analog	Time of newest data available to trend
trnd_tf\oldestfile	Analog	Offset to the oldest data log file.
trnd_tf\oldesttime	Analog	Time of oldest data available to trend.
trnd_tf\paused	Digital	Pause trend display at current time
trnd_tf\starttime	Analog	Current start time of the trend.
trnd_tf\timerange	Analog	Time range in seconds of trend display
trnd_tf\ymag	Analog	Magnification of trend Y axis.
trnd_tf\yoffset	Analog	Offset of trend Y axis.
trnd_tr\newesttime	Analog	Time of newest data available to trend
trnd_tr\oldesttime	Analog	Time of oldest data available to trend.
trnd_tr\paused	Digital	Pause trend display at current time
trnd_tr\starttime	Analog	Current start time of the trend.
trnd_tr\timerange	Analog	Time range in seconds of trend display
trnd_tr\ymag	Analog	Magnification of trend Y axis.
trnd_tr\yoffset	Analog	Offset of trend Y axis.

2.3 Graphics\Parameters

2.3.1 Graphics\Parameters\M3125aa

2.3.1.1 Parameter File

Description

```
!===== Parameter File created 06/04/97============================
! Parameter files are used with graphic displays to specify the tags a
! display uses at runtime.  The parameter file is passed to the graphic
! using the /P option of the Display command.
! Syntax:
!     #replacement=tagname
! Example:
!     #23=A_COLOR
! #23 in any expression in a graphic  would be replaced by the tag A_COLOR.
!==============================================================
! MOTOR OPERATED DRAIN VALVE   MOV-3125AA   FILE: M3125AA.PAR
!
! #1=MANUAL OPEN COMMAND
! #2=MANUAL CLOSE COMMAND
! #3=OPEN STATUS (L/S)
! #4=CLOSED STATUS (L/S)
!
#1=PCU-2\HS-3125AA1
#2=PCU-2\HS-3125AA2
#3=PCU-2\ZLH-3125AA
#4=PCU-2\ZLL-3125AA
```

2.3.1.2 Database Tags Used by the Component

Tag Name	Tag Type	Tag Description
PCU-2\HS-3125AA1	Digital	OPEN VALVE MOV-3125AA Y-79.1
PCU-2\HS-3125AA2	Digital	CLOSE VALVE MOV-3125AA Y-79.1
PCU-2\ZLH-3125AA	Digital	MOV-3125AA IS OPEN Y79-1
PCU-2\ZLL-3125AA	Digital	MOV-3125AA IS CLOSED Y80-1

2.3.2 Graphics\Parameters\M3125ab

2.3.2.1 Parameter File

Description

```
!===== Parameter File created 06/04/97============================
! Parameter files are used with graphic displays to specify the tags a
! display uses at runtime.  The parameter file is passed to the graphic
! using the /P option of the Display command.
! Syntax:
!     #replacement=tagname
! Example:
!     #23=A_COLOR
! #23 in any expression in a graphic  would be replaced by the tag A_COLOR.
!==============================================================
! MOTOR OPERATED DRAIN VALVE   MOV-3125AB   FILE: M3125AB.PAR
!
! #1=MANUAL OPEN COMMAND
! #2=MANUAL CLOSE COMMAND
! #3=OPEN STATUS (L/S)
! #4=CLOSED STATUS (L/S)
!
#1=PCU-2\HS-3125AB1
#2=PCU-2\HS-3125AB2
#3=PCU-2\ZLH-3125AB
#4=PCU-2\ZLL-3125AB
```

2.3.2.2 Database Tags Used by the Component

Tag Name	Tag Type	Tag Description
PCU-2\HS-3125AB1	Digital	OPEN VALVE MOV-3125AB Y-79.1
PCU-2\HS-3125AB2	Digital	CLOSE VALVE MOV-3125AB Y-79.1
PCU-2\ZLH-3125AB	Digital	MOV-3125AB IS OPEN Y79-1
PCU-2\ZLL-3125AB	Digital	MOV-3125AB IS CLOSED Y80-1

2.3.3 Graphics\Parameters\M3125ac

2.3.3.1 Parameter File

Description

```
!===== Parameter File created 06/04/97============================
```

Description

```
! Parameter files are used with graphic displays to specify the tags a
! display uses at runtime.  The parameter file is passed to the graphic
! using the /P option of the Display command.
! Syntax:
!     #replacement=tagname
! Example:
!     #23=A_COLOR
! #23 in any expression in a graphic  would be replaced by the tag A_COLOR.
!==========================================================
! MOTOR OPERATED DRAIN VALVE   MOV-3125AC   FILE: M3125AC.PAR
!
! #1=MANUAL OPEN COMMAND
! #2=MANUAL CLOSE COMMAND
! #3=OPEN STATUS (L/S)
! #4=CLOSED STATUS (L/S)
!
#1=PCU-2\HS-3125AC1
#2=PCU-2\HS-3125AC2
#3=PCU-2\ZLH-3125AC
#4=PCU-2\ZLL-3125AC
```

2.3.3.2 Database Tags Used by the Component

Tag Name	Tag Type	Tag Description
PCU-2\HS-3125AC1	Digital	OPEN VALVE MOV-3125AC Y-79.1
PCU-2\HS-3125AC2	Digital	CLOSE VALVE MOV-3125AC Y-79.1
PCU-2\ZLH-3125AC	Digital	MOV-3125AC IS OPEN Y79-1
PCU-2\ZLL-3125AC	Digital	MOV-3125AC IS CLOSED Y80-1

2.3.4 Graphics\Parameters\M3125ad

2.3.4.1 Parameter File

Description

```
!===== Parameter File created 06/04/97============================
! Parameter files are used with graphic displays to specify the tags a
! display uses at runtime.  The parameter file is passed to the graphic
! using the /P option of the Display command.
! Syntax:
!     #replacement=tagname
! Example:
!     #23=A_COLOR
! #23 in any expression in a graphic  would be replaced by the tag A_COLOR.
!==========================================================
! MOTOR OPERATED DRAIN VALVE   MOV-3125AD   FILE: M3125AD.PAR
!
! #1=MANUAL OPEN COMMAND
! #2=MANUAL CLOSE COMMAND
! #3=OPEN STATUS (L/S)
! #4=CLOSED STATUS (L/S)
!
#1=PCU-2\HS-3125AD1
#2=PCU-2\HS-3125AD2
#3=PCU-2\ZLH-3125AD
#4=PCU-2\ZLL-3125AD
```

2.3.4.2 Database Tags Used by the Component

Tag Name	Tag Type	Tag Description
PCU-2\HS-3125AD1	Digital	OPEN VALVE MOV-3125AD Y-79.1
PCU-2\HS-3125AD2	Digital	CLOSE VALVE MOV-3125AD Y-79.1
PCU-2\ZLH-3125AD	Digital	MOV-3125AD IS OPEN Y79-1
PCU-2\ZLL-3125AD	Digital	MOV-3125AD IS CLOSED Y80-1

2.3.5 Graphics\Parameters\M3125ae

2.3.5.1 Parameter File

Description

```
!===== Parameter File created 06/04/97============================
! Parameter files are used with graphic displays to specify the tags a
! display uses at runtime.  The parameter file is passed to the graphic
! using the /P option of the Display command.
! Syntax:
!     #replacement=tagname
! Example:
!     #23=A_COLOR
```

Description

```
! #23 in any expression in a graphic  would be replaced by the tag A_COLOR.
!==========================================================
! MOTOR OPERATED DRAIN VALVE   MOV-3125AE   FILE: M3125AE.PAR
!
! #1=MANUAL OPEN COMMAND
! #2=MANUAL CLOSE COMMAND
! #3=OPEN STATUS (L/S)
! #4=CLOSED STATUS (L/S)
!
#1=PCU-2\HS-3125AE1
#2=PCU-2\HS-3125AE2
#3=PCU-2\ZLH-3125AE
#4=PCU-2\ZLL-3125AE
```

2.3.5.2 Database Tags Used by the Component

Tag Name	Tag Type	Tag Description
PCU-2\HS-3125AE1	Digital	OPEN VALVE MOV-3125AE Y-79.1
PCU-2\HS-3125AE2	Digital	CLOSE VALVE MOV-3125AE Y-79.1
PCU-2\ZLH-3125AE	Digital	MOV-3125AE IS OPEN Y79-1
PCU-2\ZLL-3125AE	Digital	MOV-3125AE IS CLOSED Y80-1

2.3.6 Graphics\Parameters\M3125af

2.3.6.1 Parameter File

Description

```
!===== Parameter File created 06/04/97============================
! Parameter files are used with graphic displays to specify the tags a
! display uses at runtime.  The parameter file is passed to the graphic
! using the /P option of the Display command.
! Syntax:
!     #replacement=tagname
! Example:
!     #23=A_COLOR
! #23 in any expression in a graphic  would be replaced by the tag A_COLOR.
!==========================================================
! MOTOR OPERATED DRAIN VALVE   MOV-3125AF   FILE: M3125AF.PAR
!
! #1=MANUAL OPEN COMMAND
! #2=MANUAL CLOSE COMMAND
! #3=OPEN STATUS (L/S)
! #4=CLOSED STATUS (L/S)
!
#1=PCU-2\HS-3125AF1
#2=PCU-2\HS-3125AF2
#3=PCU-2\ZLH-3125AF
#4=PCU-2\ZLL-3125AF
```

2.3.6.2 Database Tags Used by the Component

Tag Name	Tag Type	Tag Description
PCU-2\HS-3125AF1	Digital	OPEN VALVE MOV-3125AF Y-79.1
PCU-2\HS-3125AF2	Digital	CLOSE VALVE MOV-3125AF Y-79.1
PCU-2\ZLH-3125AF	Digital	MOV-3125AF IS OPEN Y79-1
PCU-2\ZLL-3125AF	Digital	MOV-3125AF IS CLOSED Y80-1

2.3.7 Graphics\Parameters\M3125ag

2.3.7.1 Parameter File

Description

```
!===== Parameter File created 06/04/97============================
! Parameter files are used with graphic displays to specify the tags a
! display uses at runtime.  The parameter file is passed to the graphic
! using the /P option of the Display command.
! Syntax:
!     #replacement=tagname
! Example:
!     #23=A_COLOR
! #23 in any expression in a graphic  would be replaced by the tag A_COLOR.
!==========================================================
! MOTOR OPERATED DRAIN VALVE   MOV-3125AG   FILE: M3125AG.PAR
!
! #1=MANUAL OPEN COMMAND
! #2=MANUAL CLOSE COMMAND
! #3=OPEN STATUS (L/S)
```

Description

```
! #4=CLOSED STATUS (L/S)
!
#1=PCU-2\HS-3125AG1
#2=PCU-2\HS-3125AG2
#3=PCU-2\ZLH-3125AG
#4=PCU-2\ZLL-3125AG
```

2.3.7.2 Database Tags Used by the Component

Tag Name	Tag Type	Tag Description
PCU-2\HS-3125AG1	Digital	OPEN VALVE MOV-3125AG Y-79.1
PCU-2\HS-3125AG2	Digital	CLOSE VALVE MOV-3125AG Y-79.1
PCU-2\ZLH-3125AG	Digital	MOV-3125AG IS OPEN Y79-1
PCU-2\ZLL-3125AG	Digital	MOV-3125AG IS CLOSED Y80-1

2.3.8 Graphics\Parameters\M3125ah

2.3.8.1 Parameter File

Description

```
!===== Parameter File created 06/04/97============================
! Parameter files are used with graphic displays to specify the tags a
! display uses at runtime.  The parameter file is passed to the graphic
! using the /P option of the Display command.
! Syntax:
!     #replacement=tagname
! Example:
!     #23=A_COLOR
! #23 in any expression in a graphic  would be replaced by the tag A_COLOR.
!==========================================================
! MOTOR OPERATED DRAIN VALVE   MOV-3125AH   FILE: M3125AH.PAR
!
! #1=MANUAL OPEN COMMAND
! #2=MANUAL CLOSE COMMAND
! #3=OPEN STATUS (L/S)
! #4=CLOSED STATUS (L/S)
!
#1=PCU-2\HS-3125AH1
#2=PCU-2\HS-3125AH2
#3=PCU-2\ZLH-3125AH
#4=PCU-2\ZLL-3125AH
```

2.3.8.2 Database Tags Used by the Component

Tag Name	Tag Type	Tag Description
PCU-2\HS-3125AH1	Digital	OPEN VALVE MOV-3125AH Y-79.1
PCU-2\HS-3125AH2	Digital	CLOSE VALVE MOV-3125AH Y-79.1
PCU-2\ZLH-3125AH	Digital	MOV-3125AH IS OPEN Y79-1
PCU-2\ZLL-3125AH	Digital	MOV-3125AH IS CLOSED Y80-1

2.3.9 Graphics\Parameters\M3125aj

2.3.9.1 Parameter File

Description

```
!===== Parameter File created 06/04/97============================
! Parameter files are used with graphic displays to specify the tags a
! display uses at runtime.  The parameter file is passed to the graphic
! using the /P option of the Display command.
! Syntax:
!     #replacement=tagname
! Example:
!     #23=A_COLOR
! #23 in any expression in a graphic  would be replaced by the tag A_COLOR.
!==========================================================
! MOTOR OPERATED DRAIN VALVE   MOV-3125AJ   FILE: M3125AJ.PAR
!
! #1=MANUAL OPEN COMMAND
! #2=MANUAL CLOSE COMMAND
! #3=OPEN STATUS (L/S)
! #4=CLOSED STATUS (L/S)
!
#1=PCU-2\HS-3125AJ1
#2=PCU-2\HS-3125AJ2
#3=PCU-2\ZLH-3125AJ
#4=PCU-2\ZLL-3125AJ
```

2.3.9.2 Database Tags Used by the Component

Tag Name	Tag Type	Tag Description
PCU-2\HS-3125AJ1	Digital	OPEN VALVE MOV-3125AJ Y-79.2
PCU-2\HS-3125AJ2	Digital	CLOSE VALVE MOV-3125AJ Y-79.2
PCU-2\ZLH-3125AJ	Digital	MOV-3125AJ IS OPEN Y79-2
PCU-2\ZLL-3125AJ	Digital	MOV-3125AJ IS CLOSED Y80-2

2.3.10 Graphics\Parameters\M3125ak

2.3.10.1 Parameter File

Description

```
!===== Parameter File created 06/04/97============================
! Parameter files are used with graphic displays to specify the tags a
! display uses at runtime.  The parameter file is passed to the graphic
! using the /P option of the Display command.
! Syntax:
!     #replacement=tagname
! Example:
!     #23=A_COLOR
! #23 in any expression in a graphic  would be replaced by the tag A_COLOR.
!==================================================================
! MOTOR OPERATED DRAIN VALVE   MOV-3125AK   FILE: M3125AK.PAR
!
! #1=MANUAL OPEN COMMAND
! #2=MANUAL CLOSE COMMAND
! #3=OPEN STATUS (L/S)
! #4=CLOSED STATUS (L/S)
!
#1=PCU-2\HS-3125AK1
#2=PCU-2\HS-3125AK2
#3=PCU-2\ZLH-3125AK
#4=PCU-2\ZLL-3125AK
```

2.3.10.2 Database Tags Used by the Component

Tag Name	Tag Type	Tag Description
PCU-2\HS-3125AK1	Digital	OPEN VALVE MOV-3125AK Y-79.2
PCU-2\HS-3125AK2	Digital	CLOSE VALVE MOV-3125AK Y-79.2
PCU-2\ZLH-3125AK	Digital	MOV-3125AK IS OPEN Y79-2
PCU-2\ZLL-3125AK	Digital	MOV-3125AK IS CLOSED Y80-2

2.3.11 Graphics\Parameters\M3125ba

2.3.11.1 Parameter File

Description

```
!===== Parameter File created 06/04/97============================
! Parameter files are used with graphic displays to specify the tags a
! display uses at runtime.  The parameter file is passed to the graphic
! using the /P option of the Display command.
! Syntax:
!     #replacement=tagname
! Example:
!     #23=A_COLOR
! #23 in any expression in a graphic  would be replaced by the tag A_COLOR.
!==================================================================
! MOTOR OPERATED DRAIN VALVE   MOV-3125BA   FILE: M3125BA.PAR
!
! #1=MANUAL OPEN COMMAND
! #2=MANUAL CLOSE COMMAND
! #3=OPEN STATUS (L/S)
! #4=CLOSED STATUS (L/S)
!
#1=PCU-2\HS-3125BA1
#2=PCU-2\HS-3125BA2
#3=PCU-2\ZLH-3125BA
#4=PCU-2\ZLL-3125BA
```

2.3.11.2 Database Tags Used by the Component

Tag Name	Tag Type	Tag Description
PCU-2\HS-3125BA1	Digital	OPEN VALVE MOV-3125BA Y-80.1
PCU-2\HS-3125BA2	Digital	CLOSE VALVE MOV-3125BA Y-80.1
PCU-2\ZLH-3125BA	Digital	MOV-3125BA IS OPEN Y80-1
PCU-2\ZLL-3125BA	Digital	MOV-3125BA IS CLOSED Y81-1

2.3.12 Graphics\Parameters\M3125bb

2.3.12.1 Parameter File

Description

```
!===== Parameter File created 06/04/97============================
! Parameter files are used with graphic displays to specify the tags a
! display uses at runtime.  The parameter file is passed to the graphic
! using the /P option of the Display command.
! Syntax:
!     #replacement=tagname
! Example:
!     #23=A_COLOR
! #23 in any expression in a graphic  would be replaced by the tag A_COLOR.
!==============================================================
! MOTOR OPERATED DRAIN VALVE   MOV-3125BB   FILE: M3125BB.PAR
!
! #1=MANUAL OPEN COMMAND
! #2=MANUAL CLOSE COMMAND
! #3=OPEN STATUS (L/S)
! #4=CLOSED STATUS (L/S)
!
#1=PCU-2\HS-3125BB1
#2=PCU-2\HS-3125BB2
#3=PCU-2\ZLH-3125BB
#4=PCU-2\ZLL-3125BB
```

2.3.12.2 Database Tags Used by the Component

Tag Name	Tag Type	Tag Description
PCU-2\HS-3125BB1	Digital	OPEN VALVE MOV-3125BB Y-80.1
PCU-2\HS-3125BB2	Digital	CLOSE VALVE MOV-3125BB Y-80.1
PCU-2\ZLH-3125BB	Digital	MOV-3125BB IS OPEN Y80-1
PCU-2\ZLL-3125BB	Digital	MOV-3125BB IS CLOSED Y81-1

2.3.13 Graphics\Parameters\M3125bc

2.3.13.1 Parameter File

Description

```
!===== Parameter File created 06/04/97============================
! Parameter files are used with graphic displays to specify the tags a
! display uses at runtime.  The parameter file is passed to the graphic
! using the /P option of the Display command.
! Syntax:
!     #replacement=tagname
! Example:
!     #23=A_COLOR
! #23 in any expression in a graphic  would be replaced by the tag A_COLOR.
!==============================================================
! MOTOR OPERATED DRAIN VALVE   MOV-3125BC   FILE: M3125BC.PAR
!
! #1=MANUAL OPEN COMMAND
! #2=MANUAL CLOSE COMMAND
! #3=OPEN STATUS (L/S)
! #4=CLOSED STATUS (L/S)
!
#1=PCU-2\HS-3125BC1
#2=PCU-2\HS-3125BC2
#3=PCU-2\ZLH-3125BC
#4=PCU-2\ZLL-3125BC
```

2.3.13.2 Database Tags Used by the Component

Tag Name	Tag Type	Tag Description
PCU-2\HS-3125BC1	Digital	OPEN VALVE MOV-3125BC Y-80.1
PCU-2\HS-3125BC2	Digital	CLOSE VALVE MOV-3125BC Y-80.1
PCU-2\ZLH-3125BC	Digital	MOV-3125BC IS OPEN Y80-1
PCU-2\ZLL-3125BC	Digital	MOV-3125BC IS CLOSED Y81-1

2.3.14 Graphics\Parameters\M3125bd

2.3.14.1 Parameter File

Description

```
!===== Parameter File created 06/04/97============================
```

Description

```
! Parameter files are used with graphic displays to specify the tags a
! display uses at runtime.  The parameter file is passed to the graphic
! using the /P option of the Display command.
! Syntax:
!     #replacement=tagname
! Example:
!     #23=A_COLOR
! #23 in any expression in a graphic  would be replaced by the tag A_COLOR.
!==========================================================
! MOTOR OPERATED DRAIN VALVE   MOV-3125BD   FILE: M3125BD.PAR
!
! #1=MANUAL OPEN COMMAND
! #2=MANUAL CLOSE COMMAND
! #3=OPEN STATUS (L/S)
! #4=CLOSED STATUS (L/S)
!
#1=PCU-2\HS-3125BD1
#2=PCU-2\HS-3125BD2
#3=PCU-2\ZLH-3125BD
#4=PCU-2\ZLL-3125BD
```

2.3.14.2 Database Tags Used by the Component

Tag Name	Tag Type	Tag Description
PCU-2\HS-3125BD1	Digital	OPEN VALVE MOV-3125BD Y-80.1
PCU-2\HS-3125BD2	Digital	CLOSE VALVE MOV-3125BD Y-80.1
PCU-2\ZLH-3125BD	Digital	MOV-3125BD IS OPEN Y80-1
PCU-2\ZLL-3125BD	Digital	MOV-3125BD IS CLOSED Y81-1

2.3.15 Graphics\Parameters\M3125be

2.3.15.1 Parameter File

Description

```
!===== Parameter File created 06/04/97============================
! Parameter files are used with graphic displays to specify the tags a
! display uses at runtime.  The parameter file is passed to the graphic
! using the /P option of the Display command.
! Syntax:
!     #replacement=tagname
! Example:
!     #23=A_COLOR
! #23 in any expression in a graphic  would be replaced by the tag A_COLOR.
!==========================================================
! MOTOR OPERATED DRAIN VALVE   MOV-3125BE   FILE: M3125BE.PAR
!
! #1=MANUAL OPEN COMMAND
! #2=MANUAL CLOSE COMMAND
! #3=OPEN STATUS (L/S)
! #4=CLOSED STATUS (L/S)
!
#1=PCU-2\HS-3125BE1
#2=PCU-2\HS-3125BE2
#3=PCU-2\ZLH-3125BE
#4=PCU-2\ZLL-3125BE
```

2.3.15.2 Database Tags Used by the Component

Tag Name	Tag Type	Tag Description
PCU-2\HS-3125BE1	Digital	OPEN VALVE MOV-3125BE Y-80.1
PCU-2\HS-3125BE2	Digital	CLOSE VALVE MOV-3125BE Y-80.1
PCU-2\ZLH-3125BE	Digital	MOV-3125BE IS OPEN Y80-1
PCU-2\ZLL-3125BE	Digital	MOV-3125BE IS CLOSED Y81-1

2.3.16 Graphics\Parameters\M3125bf

2.3.16.1 Parameter File

Description

```
!===== Parameter File created 06/04/97============================
! Parameter files are used with graphic displays to specify the tags a
! display uses at runtime.  The parameter file is passed to the graphic
! using the /P option of the Display command.
! Syntax:
!     #replacement=tagname
! Example:
!     #23=A_COLOR
```

Description

```
! #23 in any expression in a graphic  would be replaced by the tag A_COLOR.
!==========================================================
! MOTOR OPERATED DRAIN VALVE   MOV-3125BF   FILE: M3125BF.PAR
!
! #1=MANUAL OPEN COMMAND
! #2=MANUAL CLOSE COMMAND
! #3=OPEN STATUS (L/S)
! #4=CLOSED STATUS (L/S)
!
#1=PCU-2\HS-3125BF1
#2=PCU-2\HS-3125BF2
#3=PCU-2\ZLH-3125BF
#4=PCU-2\ZLL-3125BF
```

2.3.16.2 Database Tags Used by the Component

Tag Name	Tag Type	Tag Description
PCU-2\HS-3125BF1	Digital	OPEN VALVE MOV-3125BF Y-80.1
PCU-2\HS-3125BF2	Digital	CLOSE VALVE MOV-3125BF Y-80.1
PCU-2\ZLH-3125BF	Digital	MOV-3125BF IS OPEN Y80-1
PCU-2\ZLL-3125BF	Digital	MOV-3125BF IS CLOSED Y81-1

2.3.17 Graphics\Parameters\M3125bg

2.3.17.1 Parameter File

Description

```
!===== Parameter File created 06/04/97============================
! Parameter files are used with graphic displays to specify the tags a
! display uses at runtime.  The parameter file is passed to the graphic
! using the /P option of the Display command.
! Syntax:
!     #replacement=tagname
! Example:
!     #23=A_COLOR
! #23 in any expression in a graphic  would be replaced by the tag A_COLOR.
!==========================================================
! MOTOR OPERATED DRAIN VALVE   MOV-3125BG   FILE: M3125BG.PAR
!
! #1=MANUAL OPEN COMMAND
! #2=MANUAL CLOSE COMMAND
! #3=OPEN STATUS (L/S)
! #4=CLOSED STATUS (L/S)
!
#1=PCU-2\HS-3125BG1
#2=PCU-2\HS-3125BG2
#3=PCU-2\ZLH-3125BG
#4=PCU-2\ZLL-3125BG
```

2.3.17.2 Database Tags Used by the Component

Tag Name	Tag Type	Tag Description
PCU-2\HS-3125BG1	Digital	OPEN VALVE MOV-3125BG Y-80.1
PCU-2\HS-3125BG2	Digital	CLOSE VALVE MOV-3125BG Y-80.1
PCU-2\ZLH-3125BG	Digital	MOV-3125BG IS OPEN Y80-1
PCU-2\ZLL-3125BG	Digital	MOV-3125BG IS CLOSED Y81-1

2.3.18 Graphics\Parameters\M3125bh

2.3.18.1 Parameter File

Description

```
!===== Parameter File created 06/04/97============================
! Parameter files are used with graphic displays to specify the tags a
! display uses at runtime.  The parameter file is passed to the graphic
! using the /P option of the Display command.
! Syntax:
!     #replacement=tagname
! Example:
!     #23=A_COLOR
! #23 in any expression in a graphic  would be replaced by the tag A_COLOR.
!==========================================================
! MOTOR OPERATED DRAIN VALVE   MOV-3125BH   FILE: M3125BH.PAR
!
! #1=MANUAL OPEN COMMAND
! #2=MANUAL CLOSE COMMAND
! #3=OPEN STATUS (L/S)
```

Description

```
! #4=CLOSED STATUS (L/S)
!
#1=PCU-2\HS-3125BH1
#2=PCU-2\HS-3125BH2
#3=PCU-2\ZLH-3125BH
#4=PCU-2\ZLL-3125BH
```

2.3.18.2 Database Tags Used by the Component

Tag Name	Tag Type	Tag Description
PCU-2\HS-3125BH1	Digital	OPEN VALVE MOV-3125BH Y-80.1
PCU-2\HS-3125BH2	Digital	CLOSE VALVE MOV-3125BH Y-80.1
PCU-2\ZLH-3125BH	Digital	MOV-3125BH IS OPEN Y80-1
PCU-2\ZLL-3125BH	Digital	MOV-3125BH IS CLOSED Y81-1

2.3.19 Graphics\Parameters\M3125bj

2.3.19.1 Parameter File

Description

```
!===== Parameter File created 06/04/97============================
! Parameter files are used with graphic displays to specify the tags a
! display uses at runtime.  The parameter file is passed to the graphic
! using the /P option of the Display command.
! Syntax:
!     #replacement=tagname
! Example:
!     #23=A_COLOR
! #23 in any expression in a graphic  would be replaced by the tag A_COLOR.
!==========================================================
! MOTOR OPERATED DRAIN VALVE   MOV-3125BJ   FILE: M3125BJ.PAR
!
! #1=MANUAL OPEN COMMAND
! #2=MANUAL CLOSE COMMAND
! #3=OPEN STATUS (L/S)
! #4=CLOSED STATUS (L/S)
!
#1=PCU-2\HS-3125BJ1
#2=PCU-2\HS-3125BJ2
#3=PCU-2\ZLH-3125BJ
#4=PCU-2\ZLL-3125BJ
```

2.3.19.2 Database Tags Used by the Component

Tag Name	Tag Type	Tag Description
PCU-2\HS-3125BJ1	Digital	OPEN VALVE MOV-3125BJ Y-80.2
PCU-2\HS-3125BJ2	Digital	CLOSE VALVE MOV-3125BJ Y-80.2
PCU-2\ZLH-3125BJ	Digital	MOV-3125BJ IS OPEN Y81-2
PCU-2\ZLL-3125BJ	Digital	MOV-3125BJ IS CLOSED Y81-2

2.3.20 Graphics\Parameters\M3125bk

2.3.20.1 Parameter File

Description

```
!===== Parameter File created 06/04/97============================
! Parameter files are used with graphic displays to specify the tags a
! display uses at runtime.  The parameter file is passed to the graphic
! using the /P option of the Display command.
! Syntax:
!     #replacement=tagname
! Example:
!     #23=A_COLOR
! #23 in any expression in a graphic  would be replaced by the tag A_COLOR.
!==========================================================
! MOTOR OPERATED DRAIN VALVE   MOV-3125BK   FILE: M3125BK.PAR
!
! #1=MANUAL OPEN COMMAND
! #2=MANUAL CLOSE COMMAND
! #3=OPEN STATUS (L/S)
! #4=CLOSED STATUS (L/S)
!
#1=PCU-2\HS-3125BK1
#2=PCU-2\HS-3125BK2
#3=PCU-2\ZLH-3125BK
#4=PCU-2\ZLL-3125BK
```

2.3.20.2 Database Tags Used by the Component

Tag Name	Tag Type	Tag Description
PCU-2\HS-3125BK1	Digital	OPEN VALVE MOV-3125BK Y-80.2
PCU-2\HS-3125BK2	Digital	CLOSE VALVE MOV-3125BK Y-80.2
PCU-2\ZLH-3125BK	Digital	MOV-3125BK IS OPEN Y81-2
PCU-2\ZLL-3125BK	Digital	MOV-3125BK IS CLOSED Y81-2

2.3.21 Graphics\Parameters\M3156a

2.3.21.1 Parameter File

Description

```
!===== Parameter File created 06/04/97============================
! Parameter files are used with graphic displays to specify the tags a
! display uses at runtime.  The parameter file is passed to the graphic
! using the /P option of the Display command.
! Syntax:
!     #replacement=tagname
! Example:
!     #23=A_COLOR
! #23 in any expression in a graphic  would be replaced by the tag A_COLOR.
!==============================================================
! MOTOR OPERATED TWO POSITION VALVE   MOV-3156A   FILE: M3156A.PAR
!
! #1=MANUAL OPEN COMMAND
! #2=MANUAL CLOSE COMMAND
! #3=OPEN STATUS (L/S)
! #4=CLOSED STATUS (L/S)
! #5=SWITCH FAILURE ALARM
! #6=FAILED TO OPEN ALARM
! #7=FAILED TO CLOSE ALARM
!
#1=PCU-2\HS-3156A1
#2=PCU-2\HS-3156A2
#3=PCU-2\ZLH-3156A
#4=PCU-2\ZLL-3156A
#5=PCU-2\ZA-3156A
#6=PCU-2\ZA-3156A1
#7=PCU-2\ZA-3156A2
```

2.3.21.2 Database Tags Used by the Component

Tag Name	Tag Type	Tag Description
PCU-2\HS-3156A1	Digital	OPEN VALVE MOV-3156A Y-89.1
PCU-2\HS-3156A2	Digital	CLOSE VALVE MOV-3156A Y-89.1
PCU-2\ZA-3156A	Digital	VALVE MOV-3156A POSITION SWITCH FAILURE Y-89.1
PCU-2\ZA-3156A1	Digital	VALVE MOV-3156A FAILED TO OPEN Y-89.1
PCU-2\ZA-3156A2	Digital	VALVE MOV-3156A FAILED TO CLOSE Y-89.1
PCU-2\ZLH-3156A	Digital	MOV-3156A IS OPEN Y89-1
PCU-2\ZLL-3156A	Digital	MOV-3156A IS CLOSED Y89-1

2.3.22 Graphics\Parameters\M3156b

2.3.22.1 Parameter File

Description

```
!===== Parameter File created 06/04/97============================
! Parameter files are used with graphic displays to specify the tags a
! display uses at runtime.  The parameter file is passed to the graphic
! using the /P option of the Display command.
! Syntax:
!     #replacement=tagname
! Example:
!     #23=A_COLOR
! #23 in any expression in a graphic  would be replaced by the tag A_COLOR.
!==============================================================
! MOTOR OPERATED TWO POSITION VALVE   MOV-3156B   FILE: M3156B.PAR
!
! #1=MANUAL OPEN COMMAND
! #2=MANUAL CLOSE COMMAND
! #3=OPEN STATUS (L/S)
! #4=CLOSED STATUS (L/S)
! #5=SWITCH FAILURE ALARM
! #6=FAILED TO OPEN ALARM
! #7=FAILED TO CLOSE ALARM
!
#1=PCU-2\HS-3156B1
#2=PCU-2\HS-3156B2
#3=PCU-2\ZLH-3156B
```

Description

#4=PCU-2\ZLL-3156B
#5=PCU-2\ZA-3156B
#6=PCU-2\ZA-3156B1
#7=PCU-2\ZA-3156B2

2.3.22.2 Database Tags Used by the Component

Tag Name	Tag Type	Tag Description
PCU-2\HS-3156B1	Digital	OPEN VALVE MOV-3156B Y-89.2
PCU-2\HS-3156B2	Digital	CLOSE VALVE MOV-3156B Y-89.2
PCU-2\ZA-3156B	Digital	VALVE MOV-3156B POSITION SWITCH FAILURE Y-89.2
PCU-2\ZA-3156B1	Digital	VALVE MOV-3156B FAILED TO OPEN Y-89.2
PCU-2\ZA-3156B2	Digital	VALVE MOV-3156B FAILED TO CLOSE Y-89.2
PCU-2\ZLH-3156B	Digital	MOV-3156B IS OPEN Y89-2
PCU-2\ZLL-3156B	Digital	MOV-3156B IS CLOSED Y89-2

2.3.23 Graphics\Parameters\M843

Description

```
!===== Parameter File created 06/04/97============================
! Parameter files are used with graphic displays to specify the tags a
! display uses at runtime.  The parameter file is passed to the graphic
! using the /P option of the Display command.
! Syntax:
!     #replacement=tagname
! Example:
!     #23=A_COLOR
! #23 in any expression in a graphic  would be replaced by the tag A_COLOR.
!==========================================================
! MOTOR OPERATED THREE POSITION VALVE   MOV-843      FILE: M843.PAR
!
! #1=MANUAL MOVE TO POSITION #1 COMMAND
! #2=MANUAL MOVE TO POSITION #2 COMMAND
! #3=MANUAL MOVE TO POSITION #3 COMMAND
! #4=IN POSITION #1 STATUS (L/S)
! #5=IN POSITION #2 STATUS (L/S)
! #6=IN POSITION #3 STATUS (L/S)
! #7=SWITCH FAILURE ALARM
! #8=FAILED TO REACH POSITION #1 ALARM
! #9=FAILED TO REACH POSITION #2 ALARM
! #10=FAILED TO REACH POSITION #3 ALARM
!
#1=PCU-4\HS-843-1
#2=PCU-4\HS-843-2
#3=PCU-4\HS-843-3
#4=PCU-4\ZL-843-1
#5=PCU-4\ZL-843-2
#6=PCU-4\ZL-843-3
#7=PCU-4\ZA-843
#8=PCU-4\ZA-843-1
#9=PCU-4\ZA-843-2
#10=PCU-4\ZA-843-3
```

2.3.24 Graphics\Parameters\M844

Description

```
!===== Parameter File created 06/04/97============================
! Parameter files are used with graphic displays to specify the tags a
! display uses at runtime.  The parameter file is passed to the graphic
! using the /P option of the Display command.
! Syntax:
!     #replacement=tagname
! Example:
!     #23=A_COLOR
! #23 in any expression in a graphic  would be replaced by the tag A_COLOR.
!==========================================================
! MOTOR OPERATED THREE POSITION VALVE   MOV-844      FILE: M844.PAR
!
! #1=MANUAL MOVE TO POSITION #1 COMMAND
! #2=MANUAL MOVE TO POSITION #2 COMMAND
! #3=MANUAL MOVE TO POSITION #3 COMMAND
! #4=IN POSITION #1 STATUS (L/S)
! #5=IN POSITION #2 STATUS (L/S)
! #6=IN POSITION #3 STATUS (L/S)
! #7=SWITCH FAILURE ALARM
! #8=FAILED TO REACH POSITION #1 ALARM
! #9=FAILED TO REACH POSITION #2 ALARM
! #10=FAILED TO REACH POSITION #3 ALARM
!
#1=PCU-4\HS-844-1
#2=PCU-4\HS-844-2
#3=PCU-4\HS-844-3
```

Description

#4=PCU-4\ZL-844-1
#5=PCU-4\ZL-844-2
#6=PCU-4\ZL-844-3
#7=PCU-4\ZA-844
#8=PCU-4\ZA-844-1
#9=PCU-4\ZA-844-2
#10=PCU-4\ZA-844-3

2.3.25 Graphics\Parameters\M845

Description

```
!===== Parameter File created 06/04/97============================
! Parameter files are used with graphic displays to specify the tags a
! display uses at runtime.  The parameter file is passed to the graphic
! using the /P option of the Display command.
! Syntax:
!     #replacement=tagname
! Example:
!     #23=A_COLOR
! #23 in any expression in a graphic  would be replaced by the tag A_COLOR.
!==============================================================
! MOTOR OPERATED TWO POSITION VALVE   MOV-845      FILE: M845.PAR
!
! #1=MANUAL OPEN COMMAND
! #2=MANUAL CLOSE COMMAND
! #3=OPEN STATUS (L/S)
! #4=CLOSED STATUS (L/S)
! #5=SWITCH FAILURE ALARM
! #6=FAILED TO OPEN ALARM
! #7=FAILED TO CLOSE ALARM
!
#1=PCU-4\HS-845-1
#2=PCU-4\HS-845-2
#3=PCU-4\ZLH-845
#4=PCU-4\ZLL-845
#5=PCU-4\ZA-845
#6=PCU-4\ZA-845-1
#7=PCU-4\ZA-845-2
```

2.3.26 Graphics\Parameters\M846

Description

```
!===== Parameter File created 06/04/97============================
! Parameter files are used with graphic displays to specify the tags a
! display uses at runtime.  The parameter file is passed to the graphic
! using the /P option of the Display command.
! Syntax:
!     #replacement=tagname
! Example:
!     #23=A_COLOR
! #23 in any expression in a graphic  would be replaced by the tag A_COLOR.
!==============================================================
! MOTOR OPERATED TWO POSITION VALVE   MOV-846      FILE: M846.PAR
!
! #1=MANUAL OPEN COMMAND
! #2=MANUAL CLOSE COMMAND
! #3=OPEN STATUS (L/S)
! #4=CLOSED STATUS (L/S)
! #5=SWITCH FAILURE ALARM
! #6=FAILED TO OPEN ALARM
! #7=FAILED TO CLOSE ALARM
!
#1=PCU-4\HS-846-1
#2=PCU-4\HS-846-2
#3=PCU-4\ZLH-846
#4=PCU-4\ZLL-846
#5=PCU-4\ZA-846
#6=PCU-4\ZA-846-1
#7=PCU-4\ZA-846-2
```

2.3.27 Graphics\Parameters\S3125c

2.3.27.1 Parameter File

Description

```
!===== Parameter File created 05/30/97============================
! Parameter files are used with graphic displays to specify the tags a
! display uses at runtime.  The parameter file is passed to the graphic
! using the /P option of the Display command.
! Syntax:
```

Description

```
!    #replacement=tagname
! Example:
!    #23=A_COLOR
! #23 in any expression in a graphic  would be replaced by the tag A_COLOR.
!==========================================================
! SOLENOID OPERATED TWO POSITION VALVE   SOV-3125C   FILE: S3125C.PAR
!
! #1=MANUAL OPEN COMMAND
! #2=MANUAL CLOSE COMMAND
! #3=OPEN STATUS (L/S)
! #4=CLOSED STATUS (L/S)
! #5=SWITCH FAILURE ALARM
! #6=FAILED TO OPEN ALARM
! #7=FAILED TO CLOSE ALARM
!
#1=PCU-2\HS-3125C1
#2=PCU-2\HS-3125C2
#3=PCU-2\ZLH-3125C
#4=PCU-2\ZLL-3125C
#5=PCU-2\ZA-3125C
#6=PCU-2\ZA-3125C1
#7=PCU-2\ZA-3125C2
```

2.3.27.2 Database Tags Used by the Component

Tag Name	Tag Type	Tag Description
PCU-2\HS-3125C1	Digital	OPEN VALVE SOV-3125C Y-84.1
PCU-2\HS-3125C2	Digital	CLOSE VALVE SOV-3125C Y-84.1
PCU-2\ZA-3125C	Digital	VALVE SOV-3125C POSITION SWITCH FAILURE Y-84.1
PCU-2\ZA-3125C1	Digital	VALVE SOV-3125C FAILED TO OPEN Y-84.1
PCU-2\ZA-3125C2	Digital	VALVE SOV-3125C FAILED TO CLOSE Y-84.1
PCU-2\ZLH-3125C	Digital	SOV-3125C IS OPEN Y84-1
PCU-2\ZLL-3125C	Digital	SOV-3125C IS CLOSED Y84-1

2.3.28 Graphics\Parameters\S3125d

2.3.28.1 Parameter File

Description

```
!===== Parameter File created 05/30/97============================
! Parameter files are used with graphic displays to specify the tags a
! display uses at runtime.  The parameter file is passed to the graphic
! using the /P option of the Display command.
! Syntax:
!    #replacement=tagname
! Example:
!    #23=A_COLOR
! #23 in any expression in a graphic  would be replaced by the tag A_COLOR.
!==========================================================
! SOLENOID OPERATED TWO POSITION VALVE   SOV-3125D   FILE: S3125D.PAR
!
! #1=MANUAL OPEN COMMAND
! #2=MANUAL CLOSE COMMAND
! #3=OPEN STATUS (L/S)
! #4=CLOSED STATUS (L/S)
! #5=SWITCH FAILURE ALARM
! #6=FAILED TO OPEN ALARM
! #7=FAILED TO CLOSE ALARM
!
#1=PCU-2\HS-3125D1
#2=PCU-2\HS-3125D2
#3=PCU-2\ZLH-3125D
#4=PCU-2\ZLL-3125D
#5=PCU-2\ZA-3125D
#6=PCU-2\ZA-3125D1
#7=PCU-2\ZA-3125D2
```

2.3.28.2 Database Tags Used by the Component

Tag Name	Tag Type	Tag Description
PCU-2\HS-3125D1	Digital	OPEN VALVE SOV-3125D Y-84.1
PCU-2\HS-3125D2	Digital	CLOSE VALVE SOV-3125D Y-84.1
PCU-2\ZA-3125D	Digital	VALVE SOV-3125D POSITION SWITCH FAILURE Y-86.1
PCU-2\ZA-3125D1	Digital	VALVE SOV-3125D FAILED TO OPEN Y-86.1
PCU-2\ZA-3125D2	Digital	VALVE SOV-3125D FAILED TO CLOSE Y-86.1
PCU-2\ZLH-3125D	Digital	SOV-3125D IS OPEN Y86-1
PCU-2\ZLL-3125D	Digital	SOV-3125D IS CLOSED Y86-1

2.3.29 Graphics\Parameters\S3125e

2.3.29.1 Parameter File

Description

```
!===== Parameter File created 05/30/97============================
```

Description

```
! Parameter files are used with graphic displays to specify the tags a
! display uses at runtime.  The parameter file is passed to the graphic
! using the /P option of the Display command.
! Syntax:
!     #replacement=tagname
! Example:
!     #23=A_COLOR
! #23 in any expression in a graphic  would be replaced by the tag A_COLOR.
!==========================================================
! SOLENOID OPERATED TWO POSITION VALVE   SOV-3125E   FILE: S3125E.PAR
!
! #1=MANUAL OPEN COMMAND
! #2=MANUAL CLOSE COMMAND
! #3=OPEN STATUS (L/S)
! #4=CLOSED STATUS (L/S)
! #5=SWITCH FAILURE ALARM
! #6=FAILED TO OPEN ALARM
! #7=FAILED TO CLOSE ALARM
!
#1=PCU-2\HS-3125E1
#2=PCU-2\HS-3125E2
#3=PCU-2\ZLH-3125E
#4=PCU-2\ZLL-3125E
#5=PCU-2\ZA-3125E
#6=PCU-2\ZA-3125E1
#7=PCU-2\ZA-3125E2
```

2.3.29.2 Database Tags Used by the Component

Tag Name	Tag Type	Tag Description
PCU-2\HS-3125E1	Digital	OPEN VALVE SOV-3125E Y-83.1
PCU-2\HS-3125E2	Digital	CLOSE VALVE SOV-3125E Y-83.1
PCU-2\ZA-3125E	Digital	VALVE SOV-3125E POSITION SWITCH FAILURE Y-83.1
PCU-2\ZA-3125E1	Digital	VALVE SOV-3125E FAILED TO OPEN Y-83.1
PCU-2\ZA-3125E2	Digital	VALVE SOV-3125E FAILED TO CLOSE Y-83.1
PCU-2\ZLH-3125E	Digital	SOV-3125E IS OPEN Y83-1
PCU-2\ZLL-3125E	Digital	SOV-3125E IS CLOSED Y83-1

2.3.30 Graphics\Parameters\S3125g

2.3.30.1 Parameter File

Description

```
!===== Parameter File created 05/30/97============================
! Parameter files are used with graphic displays to specify the tags a
! display uses at runtime.  The parameter file is passed to the graphic
! using the /P option of the Display command.
! Syntax:
!     #replacement=tagname
! Example:
!     #23=A_COLOR
! #23 in any expression in a graphic  would be replaced by the tag A_COLOR.
!==========================================================
! SOLENOID OPERATED TWO POSITION VALVE   SOV-3125G   FILE: S3125G.PAR
!
! #1=MANUAL OPEN COMMAND
! #2=MANUAL CLOSE COMMAND
! #3=OPEN STATUS (L/S)
! #4=CLOSED STATUS (L/S)
! #5=SWITCH FAILURE ALARM
! #6=FAILED TO OPEN ALARM
! #7=FAILED TO CLOSE ALARM
!
#1=PCU-2\HS-3125G1
#2=PCU-2\HS-3125G2
#3=PCU-2\ZLH-3125G
#4=PCU-2\ZLL-3125G
#5=PCU-2\ZA-3125G
#6=PCU-2\ZA-3125G1
#7=PCU-2\ZA-3125G2
```

2.3.30.2 Database Tags Used by the Component

Tag Name	Tag Type	Tag Description
PCU-2\HS-3125G1	Digital	OPEN VALVE SOV-3125G Y-84.1
PCU-2\HS-3125G2	Digital	CLOSE VALVE SOV-3125G Y-84.1
PCU-2\ZA-3125G	Digital	VALVE SOV-3125G POSITION SWITCH FAILURE Y-85.1
PCU-2\ZA-3125G1	Digital	VALVE SOV-3125G FAILED TO OPEN Y-85.1
PCU-2\ZA-3125G2	Digital	VALVE SOV-3125G FAILED TO CLOSE Y-85.1
PCU-2\ZLH-3125G	Digital	SOV-3125G IS OPEN Y85-1
PCU-2\ZLL-3125G	Digital	SOV-3125G IS CLOSED Y85-1

2.3.31 Graphics\Parameters\S3163

2.3.31.1 Parameter File

Description

```
!===== Parameter File created 05/30/97============================
! Parameter files are used with graphic displays to specify the tags a
! display uses at runtime.  The parameter file is passed to the graphic
! using the /P option of the Display command.
! Syntax:
!     #replacement=tagname
! Example:
!     #23=A_COLOR
! #23 in any expression in a graphic  would be replaced by the tag A_COLOR.
!==============================================================
! SOLENOID OPERATED TWO POSITION VALVE   SOV-3163     FILE: S3163.PAR
!
! #1=MANUAL OPEN COMMAND
! #2=MANUAL CLOSE COMMAND
! #3=OPEN STATUS (L/S)
! #4=CLOSED STATUS (L/S)
! #5=SWITCH FAILURE ALARM
! #6=FAILED TO OPEN ALARM
! #7=FAILED TO CLOSE ALARM
!
#1=PCU-2\HS-3163-1
#2=PCU-2\HS-3163-2
#3=PCU-2\ZLH-3163
#4=PCU-2\ZLL-3163
#5=PCU-2\ZA-3163
#6=PCU-2\ZA-3163-1
#7=PCU-2\ZA-3163-2
```

2.3.31.2 Database Tags Used by the Component

Tag Name	Tag Type	Tag Description
PCU-2\HS-3163-1	Digital	OPEN VALVE MOV-3163 Y-79.2
PCU-2\HS-3163-2	Digital	CLOSE VALVE MOV-3163 Y-79.2
PCU-2\ZLH-3163	Digital	SOV-3163 IS OPEN
PCU-2\ZLL-3163	Digital	SOV-3163 IS CLOSED

2.3.32 Graphics\Parameters\S3165a

2.3.32.1 Parameter File

Description

```
!===== Parameter File created 06/04/97============================
! Parameter files are used with graphic displays to specify the tags a
! display uses at runtime.  The parameter file is passed to the graphic
! using the /P option of the Display command.
! Syntax:
!     #replacement=tagname
! Example:
!     #23=A_COLOR
! #23 in any expression in a graphic  would be replaced by the tag A_COLOR.
!==============================================================
! SOLENOID OPERATED TWO POSITION VALVE   SOV-3165A   FILE: S3165A.PAR
!
! #1=MANUAL OPEN COMMAND
! #2=MANUAL CLOSE COMMAND
! #3=OPEN STATUS (L/S)
! #4=CLOSED STATUS (L/S)
! #5=SWITCH FAILURE ALARM
! #6=FAILED TO OPEN ALARM
! #7=FAILED TO CLOSE ALARM
!
#1=PCU-3\HS-3165A1
#2=PCU-3\HS-3165A2
#3=PCU-3\ZLH-3165A
#4=PCU-3\ZLL-3165A
#5=PCU-3\ZA-3165A
#6=PCU-3\ZA-3165A1
#7=PCU-3\ZA-3165A2
```

2.3.32.2 Database Tags Used by the Component

Tag Name	Tag Type	Tag Description
PCU-3\HS-3165A1	Digital	OCS OPEN VALVE SOV-3165A Y71
PCU-3\HS-3165A2	Digital	OCS CLOSE VALVE SOV-3165A Y71
PCU-3\ZA-3165A	Digital	VALVE POSITION SWITCH FAILURE Y71
PCU-3\ZA-3165A1	Digital	VALVE FAILED TO OPEN Y71

Tag Name	Tag Type	Tag Description
PCU-3\ZA-3165A2	Digital	VALVE FAILED TO CLOSE Y71
PCU-3\ZLH-3165A	Digital	SOV-3165A IS OPEN Y70
PCU-3\ZLL-3165A	Digital	SOV-3165A IS CLOSED Y70

2.3.33 Graphics\Parameters\S3165b

2.3.33.1 Parameter File

Description

```
!===== Parameter File created 06/04/97============================
! Parameter files are used with graphic displays to specify the tags a
! display uses at runtime.  The parameter file is passed to the graphic
! using the /P option of the Display command.
! Syntax:
!     #replacement=tagname
! Example:
!     #23=A_COLOR
! #23 in any expression in a graphic  would be replaced by the tag A_COLOR.
!==========================================================
! SOLENOID OPERATED TWO POSITION VALVE   SOV-3165B   FILE: S3165B.PAR
!
! #1=MANUAL OPEN COMMAND
! #2=MANUAL CLOSE COMMAND
! #3=OPEN STATUS (L/S)
! #4=CLOSED STATUS (L/S)
! #5=SWITCH FAILURE ALARM
! #6=FAILED TO OPEN ALARM
! #7=FAILED TO CLOSE ALARM
!
#1=PCU-3\HS-3165B1
#2=PCU-3\HS-3165B2
#3=PCU-3\ZLH-3165B
#4=PCU-3\ZLL-3165B
#5=PCU-3\ZA-3165B
#6=PCU-3\ZA-3165B1
#7=PCU-3\ZA-3165B2
```

2.3.33.2 Database Tags Used by the Component

Tag Name	Tag Type	Tag Description
PCU-3\HS-3165B1	Digital	OCS OPEN VALVE SOV-3165B Y71
PCU-3\HS-3165B2	Digital	OCS CLOSE VALVE SOV-3165B Y71
PCU-3\ZA-3165B	Digital	VALVE POSITION SWITCH FAILURE Y71
PCU-3\ZA-3165B1	Digital	VALVE FAILED TO OPEN Y71
PCU-3\ZA-3165B2	Digital	VALVE FAILED TO CLOSE Y71
PCU-3\ZLH-3165B	Digital	SOV-3165B IS OPEN Y70
PCU-3\ZLL-3165B	Digital	SOV-3165B IS CLOSED Y70

2.3.34 Graphics\Parameters\S3166a

2.3.34.1 Parameter File

Description

```
!===== Parameter File created 06/04/97============================
! Parameter files are used with graphic displays to specify the tags a
! display uses at runtime.  The parameter file is passed to the graphic
! using the /P option of the Display command.
! Syntax:
!     #replacement=tagname
! Example:
!     #23=A_COLOR
! #23 in any expression in a graphic  would be replaced by the tag A_COLOR.
!==========================================================
! SOLENOID OPERATED TWO POSITION VALVE   SOV-3166A   FILE: S3166A.PAR
!
! #1=MANUAL OPEN COMMAND
! #2=MANUAL CLOSE COMMAND
! #3=OPEN STATUS (L/S)
! #4=CLOSED STATUS (L/S)
! #5=SWITCH FAILURE ALARM
! #6=FAILED TO OPEN ALARM
! #7=FAILED TO CLOSE ALARM
!
#1=PCU-3\HS-3166A1
#2=PCU-3\HS-3166A2
#3=PCU-3\ZLH-3166A
#4=PCU-3\ZLL-3166A
#5=PCU-3\ZA-3166A
#6=PCU-3\ZA-3166A1
#7=PCU-3\ZA-3166A2
```

2.3.34.2 Database Tags Used by the Component

Tag Name	Tag Type	Tag Description
PCU-3\HS-3166A1	Digital	OCS OPEN VALVE SOV-3166A Y71
PCU-3\HS-3166A2	Digital	OCS CLOSE VALVE SOV-3166A Y71
PCU-3\ZA-3166A	Digital	VALVE POSITION SWITCH FAILURE Y71
PCU-3\ZA-3166A1	Digital	VALVE FAILED TO OPEN Y71
PCU-3\ZA-3166A2	Digital	VALVE FAILED TO CLOSE Y71
PCU-3\ZLH-3166A	Digital	SOV-3166A IS OPEN Y70
PCU-3\ZLL-3166A	Digital	SOV-3166A IS CLOSED Y70

2.3.35 Graphics\Parameters\S3166b

2.3.35.1 Parameter File

Description

```
!===== Parameter File created 06/04/97============================
! Parameter files are used with graphic displays to specify the tags a
! display uses at runtime.  The parameter file is passed to the graphic
! using the /P option of the Display command.
! Syntax:
!     #replacement=tagname
! Example:
!     #23=A_COLOR
! #23 in any expression in a graphic  would be replaced by the tag A_COLOR.
!==========================================================
! SOLENOID OPERATED TWO POSITION VALVE   SOV-3166B   FILE: S3166B.PAR
!
! #1=MANUAL OPEN COMMAND
! #2=MANUAL CLOSE COMMAND
! #3=OPEN STATUS (L/S)
! #4=CLOSED STATUS (L/S)
! #5=SWITCH FAILURE ALARM
! #6=FAILED TO OPEN ALARM
! #7=FAILED TO CLOSE ALARM
!
#1=PCU-3\HS-3166B1
#2=PCU-3\HS-3166B2
#3=PCU-3\ZLH-3166B
#4=PCU-3\ZLL-3166B
#5=PCU-3\ZA-3166B
#6=PCU-3\ZA-3166B1
#7=PCU-3\ZA-3166B2
```

2.3.35.2 Database Tags Used by the Component

Tag Name	Tag Type	Tag Description
PCU-3\HS-3166B1	Digital	OCS OPEN VALVE SOV-3166B Y71
PCU-3\HS-3166B2	Digital	OCS CLOSE VALVE SOV-3166B Y71
PCU-3\ZA-3166B	Digital	VALVE POSITION SWITCH FAILURE Y71
PCU-3\ZA-3166B1	Digital	VALVE FAILED TO OPEN Y71
PCU-3\ZA-3166B2	Digital	VALVE FAILED TO CLOSE Y71
PCU-3\ZLH-3166B	Digital	SOV-3166B IS OPEN Y70
PCU-3\ZLL-3166B	Digital	SOV-3166B IS CLOSED Y70

2.3.36 Graphics\Parameters\S3167a

2.3.36.1 Parameter File

Description

```
!===== Parameter File created 06/04/97============================
! Parameter files are used with graphic displays to specify the tags a
! display uses at runtime.  The parameter file is passed to the graphic
! using the /P option of the Display command.
! Syntax:
!     #replacement=tagname
! Example:
!     #23=A_COLOR
! #23 in any expression in a graphic  would be replaced by the tag A_COLOR.
!==========================================================
! SOLENOID OPERATED TWO POSITION VALVE   SOV-3167A   FILE: S3167A.PAR
!
! #1=MANUAL OPEN COMMAND
! #2=MANUAL CLOSE COMMAND
! #3=OPEN STATUS (L/S)
! #4=CLOSED STATUS (L/S)
! #5=SWITCH FAILURE ALARM
! #6=FAILED TO OPEN ALARM
! #7=FAILED TO CLOSE ALARM
!
```

Description

#1=PCU-3\HS-3167A1
#2=PCU-3\HS-3167A2
#3=PCU-3\ZLH-3167A
#4=PCU-3\ZLL-3167A
#5=PCU-3\ZA-3167A
#6=PCU-3\ZA-3167A1
#7=PCU-3\ZA-3167A2

2.3.36.2 Database Tags Used by the Component

Tag Name	Tag Type	Tag Description
PCU-3\HS-3167A1	Digital	OCS OPEN VALVE SOV-3167A Y88-1
PCU-3\HS-3167A2	Digital	OCS CLOSE VALVE SOV-3167A Y88-1
PCU-3\ZA-3167A	Digital	VALVE POSITION SWITCH FAILURE Y88-1
PCU-3\ZA-3167A1	Digital	VALVE FAILED TO OPEN Y88-1
PCU-3\ZA-3167A2	Digital	VALVE FAILED TO CLOSE Y88-1
PCU-3\ZLH-3167A	Digital	SOV-3167A IS OPEN Y88-1
PCU-3\ZLL-3167A	Digital	SOV-3167A IS CLOSED Y88-1

2.3.37 Graphics\Parameters\S3167b

2.3.37.1 Parameter File

Description

```
!===== Parameter File created 06/04/97============================
! Parameter files are used with graphic displays to specify the tags a
! display uses at runtime.  The parameter file is passed to the graphic
! using the /P option of the Display command.
! Syntax:
!     #replacement=tagname
! Example:
!     #23=A_COLOR
! #23 in any expression in a graphic  would be replaced by the tag A_COLOR.
!==========================================================
! SOLENOID OPERATED TWO POSITION VALVE   SOV-3167B   FILE: S3167B.PAR
!
! #1=MANUAL OPEN COMMAND
! #2=MANUAL CLOSE COMMAND
! #3=OPEN STATUS (L/S)
! #4=CLOSED STATUS (L/S)
! #5=SWITCH FAILURE ALARM
! #6=FAILED TO OPEN ALARM
! #7=FAILED TO CLOSE ALARM
!
#1=PCU-3\HS-3167B1
#2=PCU-3\HS-3167B2
#3=PCU-3\ZLH-3167B
#4=PCU-3\ZLL-3167B
#5=PCU-3\ZA-3167B
#6=PCU-3\ZA-3167B1
#7=PCU-3\ZA-3167B2
```

2.3.37.2 Database Tags Used by the Component

Tag Name	Tag Type	Tag Description
PCU-3\HS-3167B1	Digital	OCS OPEN VALVE SOV-3167B Y87-2
PCU-3\HS-3167B2	Digital	OCS CLOSE VALVE SOV-3167B Y87-2
PCU-3\ZA-3167B	Digital	VALVE POSITION SWITCH FAILURE Y88-2
PCU-3\ZA-3167B1	Digital	VALVE FAILED TO OPEN Y88-2
PCU-3\ZA-3167B2	Digital	VALVE FAILED TO CLOSE Y88-2
PCU-3\ZLH-3167B	Digital	SOV-3167B IS OPEN Y-88.2
PCU-3\ZLL-3167B	Digital	SOV-3167B IS CLOSED Y-88.2

2.3.38 Graphics\Parameters\S3168a

2.3.38.1 Parameter File

Description

```
!===== Parameter File created 06/04/97============================
! Parameter files are used with graphic displays to specify the tags a
! display uses at runtime.  The parameter file is passed to the graphic
! using the /P option of the Display command.
! Syntax:
!     #replacement=tagname
! Example:
!     #23=A_COLOR
! #23 in any expression in a graphic  would be replaced by the tag A_COLOR.
```

Description

```
!==========================================================
! SOLENOID OPERATED TWO POSITION VALVE   SOV-3168A   FILE: S3168A.PAR
!
! #1=MANUAL OPEN COMMAND
! #2=MANUAL CLOSE COMMAND
! #3=OPEN STATUS (L/S)
! #4=CLOSED STATUS (L/S)
! #5=SWITCH FAILURE ALARM
! #6=FAILED TO OPEN ALARM
! #7=FAILED TO CLOSE ALARM
!
#1=PCU-3\HS-3168A1
#2=PCU-3\HS-3168A2
#3=PCU-3\ZLH-3168A
#4=PCU-3\ZLL-3168A
#5=PCU-3\ZA-3168A
#6=PCU-3\ZA-3168A1
#7=PCU-3\ZA-3168A2
```

2.3.38.2 Database Tags Used by the Component

Tag Name	Tag Type	Tag Description
PCU-3\HS-3168A1	Digital	OCS OPEN VALVE SOL-3168A Y81-3
PCU-3\HS-3168A2	Digital	OCS CLOSE VALVE SOL-3168A Y81-3
PCU-3\ZA-3168A	Digital	VALVE POSITION SWITCH FAILURE Y81-3
PCU-3\ZA-3168A1	Digital	VALVE FAILED TO OPEN Y81-3
PCU-3\ZA-3168A2	Digital	VALVE FAILED TO CLOSE Y81-3
PCU-3\ZLH-3168A	Digital	SOV-3168A IS OPEN Y81-3
PCU-3\ZLL-3168A	Digital	SOV-3168A IS CLOSED Y81-3

2.3.39 Graphics\Parameters\S3168b

2.3.39.1 Parameter File

Description

```
!===== Parameter File created 06/04/97============================
! Parameter files are used with graphic displays to specify the tags a
! display uses at runtime.  The parameter file is passed to the graphic
! using the /P option of the Display command.
! Syntax:
!     #replacement=tagname
! Example:
!     #23=A_COLOR
! #23 in any expression in a graphic  would be replaced by the tag A_COLOR.
!==========================================================
! SOLENOID OPERATED TWO POSITION VALVE   SOV-3168B   FILE: S3168B.PAR
!
! #1=MANUAL OPEN COMMAND
! #2=MANUAL CLOSE COMMAND
! #3=OPEN STATUS (L/S)
! #4=CLOSED STATUS (L/S)
! #5=SWITCH FAILURE ALARM
! #6=FAILED TO OPEN ALARM
! #7=FAILED TO CLOSE ALARM
!
#1=PCU-3\HS-3168B1
#2=PCU-3\HS-3168B2
#3=PCU-3\ZLH-3168B
#4=PCU-3\ZLL-3168B
#5=PCU-3\ZA-3168B
#6=PCU-3\ZA-3168B1
#7=PCU-3\ZA-3168B2
```

2.3.39.2 Database Tags Used by the Component

Tag Name	Tag Type	Tag Description
PCU-3\HS-3168B1	Digital	OCS OPEN VALVE SOL-3168B Y81-4
PCU-3\HS-3168B2	Digital	OCS CLOSE VALVE SOL-3168B Y81-4
PCU-3\ZA-3168B	Digital	VALVE POSITION SWITCH FAILURE Y81-4
PCU-3\ZA-3168B1	Digital	VALVE FAILED TO OPEN Y81-4
PCU-3\ZA-3168B2	Digital	VALVE FAILED TO CLOSE Y81-4
PCU-3\ZLH-3168B	Digital	SOV-3168B IS OPEN Y-81-4
PCU-3\ZLL-3168B	Digital	SOV-3168B IS CLOSED Y-81-4

2.3.40 Graphics\Parameters\S3173a

2.3.40.1 Parameter File

Description

```
!===== Parameter File created 05/30/97============================
```

Description

```
! Parameter files are used with graphic displays to specify the tags a
! display uses at runtime.  The parameter file is passed to the graphic
! using the /P option of the Display command.
! Syntax:
!     #replacement=tagname
! Example:
!     #23=A_COLOR
! #23 in any expression in a graphic  would be replaced by the tag A_COLOR.
!==========================================================
! SOLENOID OPERATED TWO POSITION VALVE   SOV-3173A   FILE: S3173A.PAR
!
! #1=MANUAL OPEN COMMAND
! #2=MANUAL CLOSE COMMAND
! #3=OPEN STATUS (L/S)
! #4=CLOSED STATUS (L/S)
! #5=SWITCH FAILURE ALARM
! #6=FAILED TO OPEN ALARM
! #7=FAILED TO CLOSE ALARM
!
#1=PCU-2\HS-3173A1
#2=PCU-2\HS-3173A2
#3=PCU-2\ZLH-3173A
#4=PCU-2\ZLL-3173A
#5=PCU-2\ZA-3173A
#6=PCU-2\ZA-3173A1
#7=PCU-2\ZA-3173A2
```

2.3.40.2 Database Tags Used by the Component

Tag Name	Tag Type	Tag Description
PCU-2\HS-3173A1	Digital	OPEN VALVE SOV-3173A Y-87.1
PCU-2\HS-3173A2	Digital	CLOSE VALVE SOV-3173A Y-87.1
PCU-2\ZA-3173A	Digital	VALVE SOV-3173A POSITION SWITCH FAILURE Y-87.1
PCU-2\ZA-3173A1	Digital	VALVE SOV-3173A FAILED TO OPEN Y-87.1
PCU-2\ZA-3173A2	Digital	VALVE SOV-3173A FAILED TO CLOSE Y-87.1
PCU-2\ZLH-3173A	Digital	SOV-3173A IS OPEN Y87-1
PCU-2\ZLL-3173A	Digital	SOV-3173A IS CLOSED Y87-1

2.3.41 Graphics\Parameters\S3173b

2.3.41.1 Parameter File

Description

```
!===== Parameter File created 05/30/97============================
! Parameter files are used with graphic displays to specify the tags a
! display uses at runtime.  The parameter file is passed to the graphic
! using the /P option of the Display command.
! Syntax:
!     #replacement=tagname
! Example:
!     #23=A_COLOR
! #23 in any expression in a graphic  would be replaced by the tag A_COLOR.
!==========================================================
! SOLENOID OPERATED TWO POSITION VALVE   SOV-3173B   FILE: S3173B.PAR
!
! #1=MANUAL OPEN COMMAND
! #2=MANUAL CLOSE COMMAND
! #3=OPEN STATUS (L/S)
! #4=CLOSED STATUS (L/S)
! #5=SWITCH FAILURE ALARM
! #6=FAILED TO OPEN ALARM
! #7=FAILED TO CLOSE ALARM
!
#1=PCU-2\HS-3173B1
#2=PCU-2\HS-3173B2
#3=PCU-2\ZLH-3173B
#4=PCU-2\ZLL-3173B
#5=PCU-2\ZA-3173B
#6=PCU-2\ZA-3173B1
#7=PCU-2\ZA-3173B2
```

2.3.41.2 Database Tags Used by the Component

Tag Name	Tag Type	Tag Description
PCU-2\HS-3173B1	Digital	OPEN VALVE SOV-3173B Y-87.2
PCU-2\HS-3173B2	Digital	CLOSE VALVE SOV-3173B Y-87.2
PCU-2\ZA-3173B	Digital	VALVE SOV-3173B POSITION SWITCH FAILURE Y-87.2
PCU-2\ZA-3173B1	Digital	VALVE SOV-3173B FAILED TO OPEN Y-87.2
PCU-2\ZA-3173B2	Digital	VALVE SOV-3173B FAILED TO CLOSE Y-87.2
PCU-2\ZLH-3173B	Digital	SOV-3173B IS OPEN Y87-2
PCU-2\ZLL-3173B	Digital	SOV-3173B IS CLOSED Y87-2

2.3.42 Graphics\Parameters\S3182a

2.3.42.1 Parameter File

Description

```
!===== Parameter File created 05/30/97============================
! Parameter files are used with graphic displays to specify the tags a
! display uses at runtime.  The parameter file is passed to the graphic
! using the /P option of the Display command.
! Syntax:
!     #replacement=tagname
! Example:
!     #23=A_COLOR
! #23 in any expression in a graphic  would be replaced by the tag A_COLOR.
!==============================================================
! SOLENOID OPERATED TWO POSITION VALVE   SOV-3182A   FILE: S3182A.PAR
!
! #1=MANUAL OPEN COMMAND
! #2=MANUAL CLOSE COMMAND
! #3=OPEN STATUS (L/S)
! #4=CLOSED STATUS (L/S)
! #5=SWITCH FAILURE ALARM
! #6=FAILED TO OPEN ALARM
! #7=FAILED TO CLOSE ALARM
!
#1=PCU-2\HS-3182A1
#2=PCU-2\HS-3182A2
#3=PCU-2\ZLH-3182A
#4=PCU-2\ZLL-3182A
#5=PCU-2\ZA-3182A
#6=PCU-2\ZA-3182A1
#7=PCU-2\ZA-3182A2
```

2.3.42.2 Database Tags Used by the Component

Tag Name	Tag Type	Tag Description
PCU-2\HS-3182A1	Digital	OCS OPEN VALVE SOV-3182A Y-71.1
PCU-2\HS-3182A2	Digital	OCS CLOSE VALVE SOV-3182A Y-71.1
PCU-2\ZA-3182A	Digital	VALVE POSITION SWITCH FAILURE Y-71.1
PCU-2\ZA-3182A1	Digital	VALVE FAILED TO OPEN Y-71.1
PCU-2\ZA-3182A2	Digital	VALVE FAILED TO CLOSE Y-71.1
PCU-2\ZLH-3182A	Digital	SOV-3182A IS OPEN Y71
PCU-2\ZLL-3182A	Digital	SOV-3182A IS CLOSED Y71

2.3.43 Graphics\Parameters\S3182b

2.3.43.1 Parameter File

Description

```
!===== Parameter File created 05/30/97============================
! Parameter files are used with graphic displays to specify the tags a
! display uses at runtime.  The parameter file is passed to the graphic
! using the /P option of the Display command.
! Syntax:
!     #replacement=tagname
! Example:
!     #23=A_COLOR
! #23 in any expression in a graphic  would be replaced by the tag A_COLOR.
!==============================================================
! SOLENOID OPERATED TWO POSITION VALVE   SOV-3182B   FILE: S3182B.PAR
!
! #1=MANUAL OPEN COMMAND
! #2=MANUAL CLOSE COMMAND
! #3=OPEN STATUS (L/S)
! #4=CLOSED STATUS (L/S)
! #5=SWITCH FAILURE ALARM
! #6=FAILED TO OPEN ALARM
! #7=FAILED TO CLOSE ALARM
!
#1=PCU-2\HS-3182B1
#2=PCU-2\HS-3182B2
#3=PCU-2\ZLH-3182B
#4=PCU-2\ZLL-3182B
#5=PCU-2\ZA-3182B
#6=PCU-2\ZA-3182B1
#7=PCU-2\ZA-3182B2
```

2.3.43.2 Database Tags Used by the Component

Tag Name	Tag Type	Tag Description
PCU-2\HS-3182B1	Digital	OCS OPEN VALVE SOV-3182B Y-71.1

Tag Name	Tag Type	Tag Description
PCU-2\HS-3182B2	Digital	OCS CLOSE VALVE SOV-3182B Y-71.1
PCU-2\ZA-3182B	Digital	VALVE POSITION SWITCH FAILURE Y-71.1
PCU-2\ZA-3182B1	Digital	VALVE FAILED TO OPEN Y-71.1
PCU-2\ZA-3182B2	Digital	VALVE FAILED TO CLOSE Y-71.1
PCU-2\ZLH-3182B	Digital	SOV-3182B IS OPEN Y71
PCU-2\ZLL-3182B	Digital	SOV-3182B IS CLOSED Y71

2.3.44 Graphics\Parameters\S3183a

2.3.44.1 Parameter File

Description

```
!===== Parameter File created 05/30/97============================
! Parameter files are used with graphic displays to specify the tags a
! display uses at runtime.  The parameter file is passed to the graphic
! using the /P option of the Display command.
! Syntax:
!     #replacement=tagname
! Example:
!     #23=A_COLOR
! #23 in any expression in a graphic  would be replaced by the tag A_COLOR.
!==========================================================
! SOLENOID OPERATED TWO POSITION VALVE   SOV-3183A   FILE: S3183A.PAR
!
! #1=MANUAL OPEN COMMAND
! #2=MANUAL CLOSE COMMAND
! #3=OPEN STATUS (L/S)
! #4=CLOSED STATUS (L/S)
! #5=SWITCH FAILURE ALARM
! #6=FAILED TO OPEN ALARM
! #7=FAILED TO CLOSE ALARM
!
#1=PCU-2\HS-3183A1
#2=PCU-2\HS-3183A2
#3=PCU-2\ZLH-3183A
#4=PCU-2\ZLL-3183A
#5=PCU-2\ZA-3183A
#6=PCU-2\ZA-3183A1
#7=PCU-2\ZA-3183A2
```

2.3.44.2 Database Tags Used by the Component

Tag Name	Tag Type	Tag Description
PCU-2\HS-3183A1	Digital	OCS OPEN VALVE SOV-3183A Y-71.1
PCU-2\HS-3183A2	Digital	OCS CLOSE VALVE SOV-3183A Y-71.1
PCU-2\ZA-3183A	Digital	VALVE POSITION SWITCH FAILURE Y-71.1
PCU-2\ZA-3183A1	Digital	VALVE FAILED TO OPEN Y-71.1
PCU-2\ZA-3183A2	Digital	VALVE FAILED TO CLOSE Y-71.1
PCU-2\ZLH-3183A	Digital	SOV-3183A IS OPEN Y71
PCU-2\ZLL-3183A	Digital	SOV-3183A IS CLOSED Y71

2.3.45 Graphics\Parameters\S3183b

2.3.45.1 Parameter File

Description

```
!===== Parameter File created 05/30/97============================
! Parameter files are used with graphic displays to specify the tags a
! display uses at runtime.  The parameter file is passed to the graphic
! using the /P option of the Display command.
! Syntax:
!     #replacement=tagname
! Example:
!     #23=A_COLOR
! #23 in any expression in a graphic  would be replaced by the tag A_COLOR.
!==========================================================
! SOLENOID OPERATED TWO POSITION VALVE   SOV-3183B   FILE: S3183B.PAR
!
! #1=MANUAL OPEN COMMAND
! #2=MANUAL CLOSE COMMAND
! #3=OPEN STATUS (L/S)
! #4=CLOSED STATUS (L/S)
! #5=SWITCH FAILURE ALARM
! #6=FAILED TO OPEN ALARM
! #7=FAILED TO CLOSE ALARM
!
#1=PCU-2\HS-3183B1
#2=PCU-2\HS-3183B2
#3=PCU-2\ZLH-3183B
#4=PCU-2\ZLL-3183B
```

Description

#5=PCU-2\ZA-3183B
#6=PCU-2\ZA-3183B1
#7=PCU-2\ZA-3183B2

2.3.45.2 Database Tags Used by the Component

Tag Name	Tag Type	Tag Description
PCU-2\HS-3183B1	Digital	OCS OPEN VALVE SOV-3183B Y-71.1
PCU-2\HS-3183B2	Digital	OCS CLOSE VALVE SOV-3183B Y-71.1
PCU-2\ZA-3183B	Digital	VALVE POSITION SWITCH FAILURE Y-71.1
PCU-2\ZA-3183B1	Digital	VALVE FAILED TO OPEN Y-71.1
PCU-2\ZA-3183B2	Digital	VALVE FAILED TO CLOSE Y-71.1
PCU-2\ZLH-3183B	Digital	SOV-3183B IS OPEN Y71
PCU-2\ZLL-3183B	Digital	SOV-3183B IS CLOSED Y71

2.3.46 Graphics\Parameters\S3184

2.3.46.1 Parameter File

Description

```
!===== Parameter File created 05/30/97============================
! Parameter files are used with graphic displays to specify the tags a
! display uses at runtime.  The parameter file is passed to the graphic
! using the /P option of the Display command.
! Syntax:
!     #replacement=tagname
! Example:
!     #23=A_COLOR
! #23 in any expression in a graphic  would be replaced by the tag A_COLOR.
!==========================================================
! SOLENOID OPERATED TWO POSITION VALVE   SOV-3184      FILE: S3184.PAR
!
! #1=MANUAL OPEN COMMAND
! #2=MANUAL CLOSE COMMAND
! #3=OPEN STATUS (L/S)
! #4=CLOSED STATUS (L/S)
! #5=SWITCH FAILURE ALARM
! #6=FAILED TO OPEN ALARM
! #7=FAILED TO CLOSE ALARM
!
#1=PCU-2\HS-3184-1
#2=PCU-2\HS-3184-2
#3=PCU-2\ZLH-3184
#4=PCU-2\ZLL-3184
#5=PCU-2\ZA-3184
#6=PCU-2\ZA-3184-1
#7=PCU-2\ZA-3184-2
```

2.3.46.2 Database Tags Used by the Component

Tag Name	Tag Type	Tag Description
PCU-2\HS-3184-1	Digital	OCS OPEN VALVE SOV-3184 Y-71.1
PCU-2\HS-3184-2	Digital	OCS CLOSE VALVE SOV-3184 Y-71.1
PCU-2\ZA-3184	Digital	VALVE POSITION SWITCH FAILURE Y-71.1
PCU-2\ZA-3184-1	Digital	VALVE FAILED TO OPEN Y-71.1
PCU-2\ZA-3184-2	Digital	VALVE FAILED TO CLOSE Y-71.1
PCU-2\ZLH-3184	Digital	SOV-3184 IS OPEN Y71
PCU-2\ZLL-3184	Digital	SOV-3184 IS CLOSED Y71

2.3.47 Graphics\Parameters\S3185a

2.3.47.1 Parameter File

Description

```
!===== Parameter File created 06/04/97============================
! Parameter files are used with graphic displays to specify the tags a
! display uses at runtime.  The parameter file is passed to the graphic
! using the /P option of the Display command.
! Syntax:
!     #replacement=tagname
! Example:
!     #23=A_COLOR
! #23 in any expression in a graphic  would be replaced by the tag A_COLOR.
!==========================================================
! SOLENOID OPERATED TWO POSITION VALVE   SOV-3185A   FILE: S3185A.PAR
!
! #1=MANUAL OPEN COMMAND
```

Description

! #2=MANUAL CLOSE COMMAND
! #3=OPEN STATUS (L/S)
! #4=CLOSED STATUS (L/S)
! #5=SWITCH FAILURE ALARM
! #6=FAILED TO OPEN ALARM
! #7=FAILED TO CLOSE ALARM
!
#1=PCU-3\HS-3185A1
#2=PCU-3\HS-3185A2
#3=PCU-3\ZLH-3185A
#4=PCU-3\ZLL-3185A
#5=PCU-3\ZA-3185A
#6=PCU-3\ZA-3185A1
#7=PCU-3\ZA-3185A2

2.3.47.2 Database Tags Used by the Component

Tag Name	Tag Type	Tag Description
PCU-3\HS-3185A1	Digital	OCS OPEN VALVE SOL-3185A Y81-1
PCU-3\HS-3185A2	Digital	OCS CLOSE VALVE SOL-3185A Y81-1
PCU-3\ZA-3185A	Digital	VALVE POSITION SWITCH FAILURE Y81-1
PCU-3\ZA-3185A1	Digital	VALVE FAILED TO OPEN Y81-1
PCU-3\ZA-3185A2	Digital	VALVE FAILED TO CLOSE Y81-1
PCU-3\ZLH-3185A	Digital	SOV-3185A IS OPEN Y81-1
PCU-3\ZLL-3185A	Digital	SOV-3185A IS CLOSED Y81-1

2.3.48 Graphics\Parameters\S3185b

2.3.48.1 Parameter File

Description

!===== Parameter File created 06/04/97==========
! Parameter files are used with graphic displays to specify the tags a
! display uses at runtime. The parameter file is passed to the graphic
! using the /P option of the Display command.
! Syntax:
! #replacement=tagname
! Example:
! #23=A_COLOR
! #23 in any expression in a graphic would be replaced by the tag A_COLOR.
!==========
! SOLENOID OPERATED TWO POSITION VALVE SOV-3185B FILE: S3185B.PAR
!
! #1=MANUAL OPEN COMMAND
! #2=MANUAL CLOSE COMMAND
! #3=OPEN STATUS (L/S)
! #4=CLOSED STATUS (L/S)
! #5=SWITCH FAILURE ALARM
! #6=FAILED TO OPEN ALARM
! #7=FAILED TO CLOSE ALARM
!
#1=PCU-3\HS-3185B1
#2=PCU-3\HS-3185B2
#3=PCU-3\ZLH-3185B
#4=PCU-3\ZLL-3185B
#5=PCU-3\ZA-3185B
#6=PCU-3\ZA-3185B1
#7=PCU-3\ZA-3185B2

2.3.48.2 Database Tags Used by the Component

Tag Name	Tag Type	Tag Description
PCU-3\HS-3185B1	Digital	OCS OPEN VALVE SOL-3185B Y81-2
PCU-3\HS-3185B2	Digital	OCS CLOSE VALVE SOL-3185B Y81-2
PCU-3\ZA-3185B	Digital	VALVE POSITION SWITCH FAILURE Y81-2
PCU-3\ZA-3185B1	Digital	VALVE FAILED TO OPEN Y81-2
PCU-3\ZA-3185B2	Digital	VALVE FAILED TO CLOSE Y81-2
PCU-3\ZLH-3185B	Digital	SOV-3185B IS OPEN Y81-2
PCU-3\ZLL-3185B	Digital	SOV-3185B IS CLOSED Y81-2

2.4 Graphics\Recipe

3 ALARMS

3.1 Alarms\Alarm Setup

3.1.1 Setup

Option	Selection
Primary Path	C:\Cr-Site\Logs\ALMLOG\
Generate alarms when approaching normal operating range	Yes
Use RSView32 6.0 Log File Format	No
Use long file names (if supported)	Yes

3.1.2 File Management

Start New Files	When to Start New Files	Delete Oldest Files	Number	Units
Periodic rate	Daily (Changed at Midnight)	After Maximum	30	Files

3.1.3 Severities

Severity	Log to File	Log to Printer	Internal Bell	External Bell
Severity 1	X			
Severity 2	X			
Severity 3	X			
Severity 4	X			
Severity 5	X			
Severity 6	X			
Severity 7	X			
Severity 8	X			
Out of Alarm	X			
Acknowledged	X			
Fault	X			
Suppression	X			

3.1.4 User Messages

Message Type	Message Format
Into Alarm message to disk	\11d \8t - InAlm - Tag = \20n - \50s
Into Alarm message to printer	\11d \8t - InAlm - Tag = \20n - \50s
Out of Alarm message to disk	\11d \8t - OutAl - Tag = \20n - \50s
Out of Alarm message to printer	\11d \8t - OutAl - Tag = \20n - \50s
Acknowledged message to disk	\11d \8t - Acked - Tag = \20n - \50s
Acknowledged message to printer	\11d \8t - Acked - Tag = \20n - \50s
Into Fault message to disk	\11d \8t InFlt Tag \40n \15v
Into Fault message to printer	\11d \8t InFlt Tag \40n \15v
Out of Fault message to disk	\11d \8t OutFl Tag \40n \15v
Out of Fault message to printer	\11d \8t OutFl Tag \40n \15v
Suppress On message to disk	\11d \8t SupOn Tag \40n
Suppress On message to printer	\11d \8t SupOn Tag \40n
Suppress Off message to disk	\11d \8t SupOf Tag \40n
Suppress Off message to printer	\11d \8t SupOf Tag \40n

3.2 Alarms\Alarm Summary

4 DATA LOG

4.1 Data Log\Data Log Setup

4.1.1 Data Log\Data Log Setup\Cross Site

4.1.1.1 Setup

Option	Selection
Model Name	Cross Site
Model Description	Cross Site Transfer
Log file identifier string	
Use long file names (if supported)	Yes
Database Storage Format	dBase IV (Wide)
Number of Digits (including decimal point)	8
Digits after decimal point	4
String value width	82
Log milliseconds in separate field	No

4.1.1.2 Paths

Option	Selection
Primary logging path	C:\Cr-Site\Logs\DLGLOG
Primary logging path is	Absolute

4.1.1.3 File Management

Start New Files	When to Start New Files	Delete Oldest Files	Number	Units
Periodic rate	Daily (Changed at Midnight)	After Maximum	60	Files

4.1.1.4 LogTriggers

Option	Selection
Trigger type	Periodic rate
Interval	10 Minutes

4.1.1.5 Database Tags Used by the Component

Tag Name	Tag Type	Tag Description
PCU-1\FI-302C-1	Analog	FLUSH PUMP P-3100A OUTLET FLOW
PCU-1\FIC-302C-2	Analog	INLET FLOW TO TANK TK-302-C LINE 4
pcu-1\II-3102	Analog	PUMP P-102-SY-02A CURRENT
PCU-1\TI-302C-2	Analog	FLUSH PUMP P-3100A OUTLET TEMP LINE 3 INCH
PCU-2\PI-3125B	Analog	PUMP P-3125B INLET PRESSURE
PCU-2\PI-3125E	Analog	LINE WT-SNL-3150 PRESSURE
PCU-2\PI-3173	Analog	VALVE SOV-3173A/B PRESSURE
PCU-2\PI-3182	Analog	VALVE SOV-3182A/B PRESSURE
PCU-2\TI-3125B	Analog	LINE WT-SNL-3150 TEMPERATURE
PCU-3\PI-3126A	Analog	LOSS OF VACUUM WT-SNL-3150
PCU-3\PI-3167	Analog	VALVE SOV-3167A/B PRESSURE
PCU-3\PI-3185	Analog	VALVE SOV-3185A/B PRESSURE
PCU-3\TI-3126A	Analog	LINE WT-SNL-3150 TEMPERATURE

4.1.2 Data Log\Data Log Setup\Dlg_test

4.1.2.1 Setup

Option	Selection
Model Name	Dlg_test
Model Description	Dataloging Test datalog model
Log file identifier string	
Use long file names (if supported)	Yes
Database Storage Format	dBase IV (Narrow)
Number of Digits (including decimal point)	17
Digits after decimal point	8
String value width	82
Log milliseconds in separate field	No

4.1.2.2 Paths

Option	Selection
Primary logging path	C:\Cr-Site\Logs\DLGLOG
Primary logging path is	Absolute

4.1.2.3 File Management

Start New Files	When to Start New Files	Delete Oldest Files	Number	Units
Periodic rate	Daily (Changed at Midnight)	After Maximum	10	Files

4.1.2.4 LogTriggers

Option	Selection
Trigger type	Periodic rate
Interval	1 Minutes

4.1.2.5 Database Tags Used by the Component

Tag Name	Tag Type	Tag Description
PCU-1\FI-302C-1	Analog	FLUSH PUMP P-3100A OUTLET FLOW
PCU-1\FI-302C-1_A	Digital	PCU-1 INPUT ANALOG OVER OR UNDER RANGE ALARM
PCU-1\FIC-302C-2	Analog	INLET FLOW TO TANK TK-302-C LINE 4
PCU-1\FIC-302C-2_A	Digital	PCU-1 INPUT ANALOG OVER OR UNDER RANGE ALARM
PCU-1\II-3102	Analog	PUMP P-102-SY-02A CURRENT
PCU-1\II-3102_A	Digital	PCU-1 INPUT ANALOG OVER OR UNDER RANGE ALARM
PCU-1\LI-302C-1	Analog	TANK TK-302-C LEVEL
PCU-1\LI-302C-1_A	Digital	PCU-1 INPUT ANALOG OVER OR UNDER RANGE ALARM
PCU-1\LI-3102	Analog	241-SY-102 TANK LEVEL INDICATION
PCU-1\LI-3102_A	Digital	PCU-1 INPUT ANALOG OVER OR UNDER RANGE ALARM
PCU-1\PCU1-SP-TI-3	Analog	SPARE THERMOCOUPLE INPUT
PCU-1\PCU1-SP-TI-3_A	Digital	PCU-1 INPUT THERMOCOUPLE OVER OR UNDER RANGE ALARM
PCU-1\PCU1-SP-TI-4	Analog	SPARE THERMOCOUPLE INPUT
PCU-1\PCU1-SP-TI-4_A	Digital	PCU-1 INPUT THERMOCOUPLE OVER OR UNDER RANGE ALARM
PCU-1\PCU1-SP-TI-5	Analog	SPARE THERMOCOUPLE INPUT
PCU-1\PCU1-SP-TI-5_A	Digital	PCU-1 INPUT THERMOCOUPLE OVER OR UNDER RANGE ALARM
PCU-1\TI-302C-1	Analog	TANK TK-302-C TEMPERATURE
PCU-1\TI-302C-1_A	Digital	PCU-1 INPUT THERMOCOUPLE OVER OR UNDER RANGE ALARM
PCU-1\TI-302C-2	Analog	FLUSH PUMP P-3100A OUTLET TEMP LINE 3 INCH
PCU-1\TI-302C-2_A	Digital	PCU-1 INPUT THERMOCOUPLE OVER OR UNDER RANGE ALARM

4.1.3 Data Log\Data Log Setup\Dlg_tst0

4.1.3.1 Setup

Option	Selection
Model Name	Dlg_tst0
Model Description	Dataloging Test datalog model
Log file identifier string	
Use long file names (if supported)	Yes
Database Storage Format	dBase IV (Wide)
Number of Digits (including decimal point)	17
Digits after decimal point	8
String value width	82
Log milliseconds in separate field	No

4.1.3.2 Paths

Option	Selection
Primary logging path	C:\Cr-Site\Logs\DLGLOG
Primary logging path is	Absolute

4.1.3.3 File Management

Start New Files	When to Start New Files	Delete Oldest Files	Number	Units
Periodic rate	Daily (Changed at Midnight)	After Maximum	10	Files

4.1.3.4 LogTriggers

Option	Selection
Trigger type	Periodic rate
Interval	1 Minutes

4.1.3.5 Database Tags Used by the Component

Tag Name	Tag Type	Tag Description
PCU-1\FI-302C-1	Analog	FLUSH PUMP P-3100A OUTLET FLOW
PCU-1\FI-302C-1_A	Digital	PCU-1 INPUT ANALOG OVER OR UNDER RANGE ALARM
PCU-1\FIC-302C-2	Analog	INLET FLOW TO TANK TK-302-C LINE 4
PCU-1\FIC-302C-2_A	Digital	PCU-1 INPUT ANALOG OVER OR UNDER RANGE ALARM
PCU-1\II-3102	Analog	PUMP P-102-SY-02A CURRENT
PCU-1\II-3102_A	Digital	PCU-1 INPUT ANALOG OVER OR UNDER RANGE ALARM
PCU-1\LI-302C-1	Analog	TANK TK-302-C LEVEL
PCU-1\LI-302C-1_A	Digital	PCU-1 INPUT ANALOG OVER OR UNDER RANGE ALARM
PCU-1\LI-3102	Analog	241-SY-102 TANK LEVEL INDICATION
PCU-1\LI-3102_A	Digital	PCU-1 INPUT ANALOG OVER OR UNDER RANGE ALARM
PCU-1\PCU1-SP-TI-3	Analog	SPARE THERMOCOUPLE INPUT
PCU-1\PCU1-SP-TI-3_A	Digital	PCU-1 INPUT THERMOCOUPLE OVER OR UNDER RANGE ALARM
PCU-1\PCU1-SP-TI-4	Analog	SPARE THERMOCOUPLE INPUT
PCU-1\PCU1-SP-TI-4_A	Digital	PCU-1 INPUT THERMOCOUPLE OVER OR UNDER RANGE ALARM
PCU-1\PCU1-SP-TI-5	Analog	SPARE THERMOCOUPLE INPUT
PCU-1\PCU1-SP-TI-5_A	Digital	PCU-1 INPUT THERMOCOUPLE OVER OR UNDER RANGE ALARM
PCU-1\TI-302C-1	Analog	TANK TK-302-C TEMPERATURE
PCU-1\TI-302C-1_A	Digital	PCU-1 INPUT THERMOCOUPLE OVER OR UNDER RANGE ALARM
PCU-1\TI-302C-2	Analog	FLUSH PUMP P-3100A OUTLET TEMP LINE 3 INCH
PCU-1\TI-302C-2_A	Digital	PCU-1 INPUT THERMOCOUPLE OVER OR UNDER RANGE ALARM

4.1.4 Data Log\Data Log Setup\Dlg_tst1

4.1.4.1 Setup

Option	Selection
Model Name	Dlg_tst1
Model Description	Dataloging Test datalog modeL (20 ANALOGS)
Log file identifier string	
Use long file names (if supported)	Yes
Database Storage Format	dBase IV (Narrow)
Number of Digits (including decimal point)	17
Digits after decimal point	8
String value width	82
Log milliseconds in separate field	No

4.1.4.2 Paths

Option	Selection
Primary logging path	C:\Cr-Site\Logs\DLGLOG
Primary logging path is	Absolute

4.1.4.3 File Management

Start New Files	When to Start New Files	Delete Oldest Files	Number	Units
Periodic rate	Daily (Changed at Midnight)	After Maximum	10	Files

4.1.4.4 LogTriggers

Option	Selection
Trigger type	Periodic rate
Interval	1 Minutes

4.1.4.5 Database Tags Used by the Component

Tag Name	Tag Type	Tag Description
PCU-1\FI-302C-1	Analog	FLUSH PUMP P-3100A OUTLET FLOW
PCU-1\FIC-302C-2	Analog	INLET FLOW TO TANK TK-302-C LINE 4
PCU-1\II-3102	Analog	PUMP P-102-SY-02A CURRENT
PCU-1\LI-302C-1	Analog	TANK TK-302-C LEVEL
PCU-1\LI-3102	Analog	241-SY-102 TANK LEVEL INDICATION
PCU-1\PCU1-SP-TI-3	Analog	SPARE THERMOCOUPLE INPUT
PCU-1\PCU1-SP-TI-4	Analog	SPARE THERMOCOUPLE INPUT
PCU-1\PCU1-SP-TI-5	Analog	SPARE THERMOCOUPLE INPUT
PCU-1\TI-302C-1	Analog	TANK TK-302-C TEMPERATURE
PCU-1\TI-302C-2	Analog	FLUSH PUMP P-3100A OUTLET TEMP LINE 3 INCH
PCU-2\FIC-3125	Analog	PUMP P-3125 A/B OUTLET FLOW
PCU-2\FIC-3125-E	Analog	PUMP P-3125 A/B PID CONTROL ERROR
PCU-2\FIC-3125-O	Analog	PUMP P-3125 A/B OUTLET FLOW / DRIVE SPEED REF OUTPUT
PCU-2\FIC-3125A	Analog	PUMP P-3125A OUTLET FLOW CONTROL SIGNAL [DRIVE SPEED]
PCU-2\FIC-3125B	Analog	PUMP P-3125B OUTLET FLOW CONTROL SIGNAL [DRIVE SPEED]
PCU-2\PI-3125A	Analog	PUMP P-3125A INLET PRESSURE
PCU-2\PI-3125B	Analog	PUMP P-3125B INLET PRESSURE
PCU-2\PI-3125C	Analog	PUMP P-3125A OUTLET PRESSURE

Tag Name	Tag Type	Tag Description
PCU-2\PI-3125D	Analog	PUMP P-3125B OUTLET PRESSURE
PCU-2\PI-3125E	Analog	LINE WT-SNL-3150 PRESSURE
PCU-2\SI-3125A	Analog	MOTOR SPEED PUMP P-3125A
PCU-2\SI-3125B	Analog	MOTOR SPEED PUMP P-3125B
PCU-2\VI-3125A1	Analog	PUMP P-3125A BEARING VIBRATION
PCU-2\VI-3125A2	Analog	PUMP P-3125A BEARING VIBRATION
PCU-2\VI-3125B1	Analog	PUMP P-3125B BEARING VIBRATION
PCU-2\VI-3125B2	Analog	PUMP P-3125B BEARING VIBRATION

4.1.5 Data Log\Data Log Setup\P3125

4.1.5.1 Setup

Option	Selection
Model Name	P3125
Model Description	PUMP 3125 DATA LOG
Log file identifier string	
Use long file names (if supported)	Yes
Database Storage Format	dBase IV (Wide)
Number of Digits (including decimal point)	17
Digits after decimal point	8
String value width	82
Log milliseconds in separate field	No

4.1.5.2 Paths

Option	Selection
Primary logging path	C:\Cr-Site\Logs\DLGLOG
Primary logging path is	Absolute

4.1.5.3 File Management

Start New Files	When to Start New Files	Delete Oldest Files	Number	Units
Periodic rate	Daily (Changed at Midnight)	After Maximum	30	Files

4.1.5.4 LogTriggers

Option	Selection
Trigger type	Periodic rate
Interval	1 Seconds

4.1.5.5 Database Tags Used by the Component

Tag Name	Tag Type	Tag Description
PCU-2\FIC-3125	Analog	PUMP P-3125 A/B OUTLET FLOW
PCU-2\FIC-3125-E	Analog	PUMP P-3125 A/B PID CONTROL ERROR
PCU-2\FIC-3125A	Analog	PUMP P-3125A OUTLET FLOW CONTROL SIGNAL [DRIVE SPEED]
PCU-2\FIC-3125B	Analog	PUMP P-3125B OUTLET FLOW CONTROL SIGNAL [DRIVE SPEED]
PCU-2\PI-3125C	Analog	PUMP P-3125A OUTLET PRESSURE
PCU-2\PI-3125D	Analog	PUMP P-3125B OUTLET PRESSURE
PCU-2\SI-3125A	Analog	MOTOR SPEED PUMP P-3125A
PCU-2\SI-3125B	Analog	MOTOR SPEED PUMP P-3125B
PCU-2\VI-3125A1	Analog	PUMP P-3125A BEARING VIBRATION
PCU-2\VI-3125A2	Analog	PUMP P-3125A BEARING VIBRATION
PCU-2\VI-3125B1	Analog	PUMP P-3125B BEARING VIBRATION
PCU-2\VI-3125B2	Analog	PUMP P-3125B BEARING VIBRATION

4.1.6 Data Log\Data Log Setup\R_Transf

4.1.6.1 Setup

Option	Selection
Model Name	R_Transf
Model Description	Transfer Report datalog model
Log file identifier string	
Use long file names (if supported)	Yes
Database Storage Format	dBase IV (Narrow)
Number of Digits (including decimal point)	17
Digits after decimal point	8
String value width	82
Log milliseconds in separate field	No

4.1.6.2 Paths

Option	Selection
Primary logging path	C:\Cr-Site\Logs\DLGLOG
Primary logging path is	Absolute

4.1.6.3 File Management

Start New Files	When to Start New Files	Delete Oldest Files	Number	Units
On Event	{PCU-3\TR_ON_1001} OR {PCU-3\TR_ON_1002A} OR {PCU-3\TR_ON_1002B} OR {PCU-3\TR_ON_1003}	After Maximum	30	Files

4.1.6.4 LogTriggers

Option	Selection
Trigger type	Periodic rate
Interval	10 Minutes

4.1.6.5 Database Tags Used by the Component

Tag Name	Tag Type	Tag Description
PCU-1\FIQ-302C-2H	Analog	TOTALIZED INLET FLOW TO TANK TK-302-C HIGH PART
PCU-1\FIQ-302C-2L	Analog	TOTALIZED INLET FLOW TO TANK TK-302-C LOW PART
PCU-1\LI-3102	Analog	241-SY-102 TANK LEVEL INDICATION
PCU-1\P-102-SY-02A1	Digital	START PUMP P-102-SY-02A Y75
PCU-1\TI-302C-2	Analog	FLUSH PUMP P-3100A OUTLET TEMP LINE 3 INCH
PCU-2\P-3125A1	Digital	START PUMP P-3125A Y74-1
PCU-2\P-3125B1	Digital	START PUMP P-3125B Y74-2
PCU-2\PI-3125A	Analog	PUMP P-3125A INLET PRESSURE
PCU-2\PI-3125B	Analog	PUMP P-3125B INLET PRESSURE
PCU-2\PI-3125C	Analog	PUMP P-3125A OUTLET PRESSURE
PCU-2\PI-3125D	Analog	PUMP P-3125B OUTLET PRESSURE
PCU-2\TI-3125A1	Analog	PUMP P-3125A MOTOR BEARING TEMPERATURE
PCU-2\TI-3125B1	Analog	PUMP P-3125B MOTOR BEARING TEMPERATURE
PCU-3\PI-3126A	Analog	LOSS OF VACUUM WT-SNL-3150
PCU-3\TR_ON_1001	Digital	TRANSFER 1 INITIATED Y-41.1
PCU-3\TR_ON_1002A	Digital	TRANSFER 2A INITIATED Y-42.1
PCU-3\TR_ON_1002B	Digital	TRANSFER 2B INITIATED Y-43.1
PCU-3\TR_ON_1003	Digital	TRANSFER 3 INITIATED Y-44.1
PCU-4\LI-850	Analog	244-A SUMP LEVEL READING
PCU-4\LI-853	Analog	244-A CATCH TANK LEVEL READING

4.1.7 Data Log\Data Log Setup\Spd_Test

4.1.7.1 Setup

Option	Selection
Model Name	Spd_Test
Model Description	Communication Speed Test datalog model
Log file identifier string	
Use long file names (if supported)	Yes
Database Storage Format	dBase IV (Narrow)
Number of Digits (including decimal point)	17
Digits after decimal point	8
String value width	82
Log milliseconds in separate field	No

4.1.7.2 Paths

Option	Selection
Primary logging path	C:\Cr-Site\Logs\DLGLOG
Primary logging path is	Absolute

4.1.7.3 File Management

Start New Files	When to Start New Files	Delete Oldest Files	Number	Units
On Event	TEST_1	After Maximum	10	Files

4.1.7.4 LogTriggers

Option	Selection
Trigger type	On Change
Change percentage	0
Heartbeat rate	0 Seconds

4.1.7.5 Database Tags Used by the Component

Tag Name	Tag Type	Tag Description
PCU-1\COM_SPD_TST	Analog	COMMUNICATIONS TEST REGISTER TO OIT
TEST_1	Digital	TEST HOLDING BIT

5 LOGIC AND CONTROL

5.1 Logic and Control\Derived Tags

5.1.1 Logic and Control\Derived Tags\Comm_Check

Derived Tag file

5.1.1.1 Derived Tags Setup

Option	Selection
Description	Derived Tag file
Evaluation	Periodic
Evaluation Interval	4.000000 (Seconds)

5.1.1.2 Derived Tags Information

	Tag Name	Expression	Description
1	PCU-1\HB_COMM_CNT	if ({PCU-1\HB_REF} <> {PCU-1\HB_PLC1_OCS_BOTH}) then 0 else if {PCU-1\HB_COMM_OK} then {PCU-1\HB_COMM_CNT} + 1 else 50	Increment the counter when the Comm reference equals the source
2	PCU-1\HB_COMM_OK	if ({PCU-1\HB_COMM_CNT} <= 5) then 1 else 0	Set the Comm OK bit when the counter is less than the threshold
3	PCU-2\HB_COMM_CNT	if ({PCU-2\HB_REF} <> {PCU-2\HB_PLC2_OCS_BOTH}) then 0 else if {PCU-2\HB_COMM_OK} then {PCU-2\HB_COMM_CNT} + 1 else 50	Increment the counter when the Comm reference equals the source
4	PCU-2\HB_COMM_OK	if ({PCU-2\HB_COMM_CNT} <= 5) then 1 else 0	Set the Comm OK bit when the counter is less than the threshold
5	PCU-3\HB_COMM_CNT	if ({PCU-3\HB_REF} <> {PCU-3\HB_PLC3_OCS_BOTH}) then 0 else if {PCU-3\HB_COMM_OK} then {PCU-3\HB_COMM_CNT} + 1 else 50	Increment the counter when the Comm reference equals the source
6	PCU-3\HB_COMM_OK	if ({PCU-3\HB_COMM_CNT} <= 5) then 1 else 0	Set the Comm OK bit when the counter is less than the threshold
7	PCU-4\HB_COMM_CNT	if ({PCU-4\HB_REF} <> {PCU-4\HB_PLC4_OCS_BOTH}) then 0 else if {PCU-4\HB_COMM_OK} then {PCU-4\HB_COMM_CNT} + 1 else 50	Increment the counter when the Comm reference equals the source
8	PCU-4\HB_COMM_OK	if ({PCU-4\HB_COMM_CNT} <= 5) then 1 else 0	Set the Comm OK bit when the counter is less than the threshold
9	PCU-5\HB_COMM_CNT	if ({PCU-5\HB_REF} <> {PCU-5\HB_PLC5_OCS_BOTH}) then 0 else if {PCU-5\HB_COMM_OK} then {PCU-5\HB_COMM_CNT} + 1 else 50	Increment the counter when the Comm reference equals the source
10	PCU-5\HB_COMM_OK	if ({PCU-5\HB_COMM_CNT} <= 5) then 1 else 0	Set the Comm OK bit when the counter is less than the threshold

5.1.1.3 Database Tags Used by the Component

Tag Name	Tag Type	Tag Description
PCU-1\HB_COMM_CNT	Analog	Communications checking counter
PCU-1\HB_COMM_OK	Digital	Communications from PLC currently OK
PCU-1\HB_PLC1_OCS_BOTH	Analog	COMMUN. HEARTBEAT REGISTER FROM PCU-1 TO BOTH OPERATOR TERMINALS
PCU-1\HB_REF	Analog	Communications heartbeat reference register
PCU-2\HB_COMM_CNT	Analog	Communications checking counter
PCU-2\HB_COMM_OK	Digital	Communications from PLC currently OK
PCU-2\HB_PLC2_OCS_BOTH	Analog	COMMUN. HEARTBEAT REGISTER FROM PCU-2 TO BOTH OPERATOR TERMINALS
PCU-2\HB_REF	Analog	Communications heartbeat reference register
PCU-3\HB_COMM_CNT	Analog	Communications checking counter
PCU-3\HB_COMM_OK	Digital	Communications from PLC currently OK
PCU-3\HB_PLC3_OCS_BOTH	Analog	COMMUN. HEARTBEAT REGISTER FROM PCU-3 TO BOTH OPERATOR TERMINALS
PCU-3\HB_REF	Analog	Communications heartbeat reference register
PCU-4\HB_COMM_CNT	Analog	Communications checking counter
PCU-4\HB_COMM_OK	Digital	Communications from PLC currently OK
PCU-4\HB_PLC4_OCS_BOTH	Analog	COMMUN. HEARTBEAT REGISTER FROM PCU-4 TO BOTH OPERATOR TERMINALS
PCU-4\HB_REF	Analog	Communications heartbeat reference register
PCU-5\HB_COMM_CNT	Analog	Communications checking counter
PCU-5\HB_COMM_OK	Digital	Communications from PLC currently OK
PCU-5\HB_PLC5_OCS_BOTH	Analog	COMMUN. HEARTBEAT REGISTER FROM PCU-5 TO BOTH OPERATOR TERMINALS
PCU-5\HB_REF	Analog	Communications heartbeat reference register

5.1.2 Logic and Control\Derived Tags\Comm_Reset

Derived Tag file

5.1.2.1 Derived Tags Setup

Option	Selection
Description	Derived Tag file
Evaluation	Periodic
Evaluation Interval	10.000000 (Seconds)

5.1.2.2 Derived Tags Information

	Tag Name	Expression	Description
1	PCU-1\HB_REF	{PCU-1\HB_PLC1_OCS_BOTH}	Set the Comm reference register equal to the latest PLC source value
2	PCU-2\HB_REF	{PCU-2\HB_PLC2_OCS_BOTH}	Set the Comm reference register equal to the latest PLC source value

	Tag Name	Expression	Description
3	PCU-3\HB_REF	{PCU-3\HB_PLC3_OCS_BOTH}	Set the Comm reference register equal to the latest PLC source value
4	PCU-4\HB_REF	{PCU-4\HB_PLC4_OCS_BOTH}	Set the Comm reference register equal to the latest PLC source value
5	PCU-5\HB_REF	{PCU-5\HB_PLC5_OCS_BOTH}	Set the Comm reference register equal to the latest PLC source value

5.1.2.3 Database Tags Used by the Component

Tag Name	Tag Type	Tag Description
PCU-1\HB_PLC1_OCS_BOTH	Analog	COMMUN. HEARTBEAT REGISTER FROM PCU-1 TO BOTH OPERATOR TERMINALS
PCU-1\HB_REF	Analog	Communications heartbeat reference register
PCU-2\HB_PLC2_OCS_BOTH	Analog	COMMUN. HEARTBEAT REGISTER FROM PCU-2 TO BOTH OPERATOR TERMINALS
PCU-2\HB_REF	Analog	Communications heartbeat reference register
PCU-3\HB_PLC3_OCS_BOTH	Analog	COMMUN. HEARTBEAT REGISTER FROM PCU-3 TO BOTH OPERATOR TERMINALS
PCU-3\HB_REF	Analog	Communications heartbeat reference register
PCU-4\HB_PLC4_OCS_BOTH	Analog	COMMUN. HEARTBEAT REGISTER FROM PCU-4 TO BOTH OPERATOR TERMINALS
PCU-4\HB_REF	Analog	Communications heartbeat reference register
PCU-5\HB_PLC5_OCS_BOTH	Analog	COMMUN. HEARTBEAT REGISTER FROM PCU-5 TO BOTH OPERATOR TERMINALS
PCU-5\HB_REF	Analog	Communications heartbeat reference register

5.1.3 Logic and Control\Derived Tags\Global

Derived Tag file

5.1.3.1 Derived Tags Setup

Option	Selection
Description	Derived Tag file
Evaluation	Periodic
Evaluation Interval	1.000000 (Seconds)

5.1.3.2 Derived Tags Information

	Tag Name	Expression	Description
1	PCU-3\ZA-VALVES	{PCU-3\ZA-3165A} OR {PCU-3\ZA-3165A1} OR {PCU-3\ZA-3165A2} OR {PCU-3\ZA-3165B} OR {PCU-3\ZA-3165B1} OR {PCU-3\ZA-3165B2} OR {PCU-3\ZA-3166A} OR {PCU-3\ZA-3166A1} OR {PCU-3\ZA-3166A2} OR {PCU-3\ZA-3166B} OR {PCU-3\ZA-3166B1} OR {PCU-3\ZA-3166B2} OR {PCU-3\ZA-3167A} OR {PCU-3\ZA-3167A1} OR {PCU-3\ZA-3167A2} OR {PCU-3\ZA-3167B} OR {PCU-3\ZA-3167B1} OR {PCU-3\ZA-3167B2} OR {PCU-3\ZA-3168A} OR {PCU-3\ZA-3168A1} OR {PCU-3\ZA-3168A2} OR {PCU-3\ZA-3168B} OR {PCU-3\ZA-3168B1} OR {PCU-3\ZA-3168B2} OR {PCU-3\ZA-3185A} OR {PCU-3\ZA-3185A1} OR {PCU-3\ZA-3185A2} OR {PCU-3\ZA-3185B} OR {PCU-3\ZA-3185B1} OR {PCU-3\ZA-3185B2}	PCU-3 VALVE FAILURE FOR OVERVIEW SCREEN INDICATION
2	PCU-2\ZA-VALVES	{PCU-2\ZA-3125C} OR {PCU-2\ZA-3125C1} OR {PCU-2\ZA-3125C2} OR {PCU-2\ZA-3125D} OR {PCU-2\ZA-3125D1} OR {PCU-2\ZA-3125D2} OR {PCU-2\ZA-3125E} OR {PCU-2\ZA-3125E1} OR {PCU-2\ZA-3125E2} OR {PCU-2\ZA-3125G} OR {PCU-2\ZA-3125G1} OR {PCU-2\ZA-3125G2} OR {PCU-2\ZA-3173A} OR {PCU-2\ZA-3173A1} OR {PCU-2\ZA-3173A2} OR {PCU-2\ZA-3173B} OR {PCU-2\ZA-3173B1} OR {PCU-2\ZA-3173B2} OR {PCU-2\ZA-3182A} OR {PCU-2\ZA-3182A1} OR {PCU-2\ZA-3182A2} OR {PCU-2\ZA-3182B} OR {PCU-2\ZA-3182B1} OR {PCU-2\ZA-3182B2} OR {PCU-2\ZA-3183A} OR {PCU-2\ZA-3183A1} OR {PCU-2\ZA-3183A2} OR {PCU-2\ZA-3183B} OR {PCU-2\ZA-3183B1} OR {PCU-2\ZA-3183B2}	PCU-2 VALVE FAILURE FOR OVERVIEW SCREEN INDICATION
3	PCU-2\ZA-PUMPS	{PCU-2\TAH-3125A1} OR {PCU-2\TAH-3125A2} OR NOT {PCU-2\TAH-3125A} OR {PCU-2\PAL-3125A} OR {PCU-2\PAH-3125A} OR {PCU-2\PAH-3125C} OR NOT {PCU-2\PAL-3125A1} OR NOT {PCU-2\PAL-3125A2} OR NOT {PCU-2\FAH-3125A1} OR NOT {PCU-2\FAH-3125A2} OR NOT {PCU-2\LAL-3125A1} OR NOT {PCU-2\LAL-3125A2} OR {PCU-2\VAH-3125A1} OR {PCU-2\VAH-3125A2} OR {PCU-2\XA-3125A} OR {PCU-2\TAH-3125B1} OR {PCU-2\TAH-3125B2} OR NOT {PCU-2\TAH-3125B} OR {PCU-2\PAL-3125B} OR {PCU-2\PAH-3125B} OR {PCU-2\PAH-3125D} OR NOT {PCU-2\PAL-3125B1} OR NOT {PCU-2\PAL-3125B2} OR NOT {PCU-2\FAH-3125B1} OR NOT {PCU-2\FAH-3125B2} OR NOT {PCU-2\LAL-3125B1} OR NOT {PCU-2\LAL-3125B2} OR {PCU-2\VAH-3125B1} OR {PCU-2\VAH-3125B2} OR {PCU-2\XA-3125B}	PCU-2 PUMP FAILURE FOR OVERVIEW SCREEN INDICATION

5.1.3.3 Database Tags Used by the Component

Tag Name	Tag Type	Tag Description
PCU-2\FAH-3125A1	Digital	LOW AIR FLOW PUMP SEAL PUMP P-3125A [OFF = ALARM] Y76
PCU-2\FAH-3125A2	Digital	LOW AIR FLOW PUMP SEAL PUMP P-3125A [OFF = ALARM] Y76
PCU-2\FAH-3125B1	Digital	LOW AIR FLOW PUMP SEAL PUMP P-3125B [OFF = ALARM] Y76
PCU-2\FAH-3125B2	Digital	LOW AIR FLOW PUMP SEAL PUMP P-3125B [OFF = ALARM] Y76
PCU-2\LAL-3125A1	Digital	PUMP P-3125A LOW OIL LEVEL [OFF = ALARM] Y76
PCU-2\LAL-3125A2	Digital	PUMP P-3125A LOW OIL LEVEL [OFF = ALARM] Y76
PCU-2\LAL-3125B1	Digital	PUMP P-3125B LOW OIL LEVEL [OFF = ALARM] Y76
PCU-2\LAL-3125B2	Digital	PUMP P-3125B LOW OIL LEVEL [OFF = ALARM] Y76
PCU-2\PAH-3125A	Digital	BOOSTER PUMP HIGH INLET PRESSURE Y-75.1
PCU-2\PAH-3125B	Digital	BOOSTER PUMP HIGH INLET PRESSURE Y-75.1

Tag Name	Tag Type	Tag Description
PCU-2\PAH-3125C	Digital	BOOSTER PUMP HIGH DISCHARGE PRESSURE Y-78.1
PCU-2\PAH-3125D	Digital	BOOSTER PUMP HIGH DISCHARGE PRESSURE Y-78.1
PCU-2\PAL-3125A	Digital	BOOSTER PUMP LOW INLET PRESSURE Y-74.1
PCU-2\PAL-3125A1	Digital	PUMP P-3125A SEAL FAILURE [OFF = ALARM] Y76
PCU-2\PAL-3125A2	Digital	PUMP P-3125A SEAL FAILURE [OFF = ALARM] Y76
PCU-2\PAL-3125B	Digital	BOOSTER PUMP LOW INLET PRESSURE Y-74.2
PCU-2\PAL-3125B1	Digital	PUMP P-3125B SEAL FAILURE [OFF = ALARM] Y76
PCU-2\PAL-3125B2	Digital	PUMP P-3125B SEAL FAILURE [OFF = ALARM] Y76
PCU-2\TAH-3125A	Digital	PUMP P-3125A MOTOR WINDING TEMP. HIGH [OFF = ALARM] Y76
PCU-2\TAH-3125A1	Digital	PUMP P-3125A INBOARD BEARING HIGH TEMP. Y-76.1
PCU-2\TAH-3125A2	Digital	PUMP P-3125A OUTBOARD BEARING HIGH TEMP. Y-76.1
PCU-2\TAH-3125B	Digital	PUMP P-3125B MOTOR WINDING TEMP. HIGH [OFF = ALARM] Y76
PCU-2\TAH-3125B1	Digital	PUMP P-3125B INBOARD BEARING HIGH TEMP. Y-76.1
PCU-2\TAH-3125B2	Digital	PUMP P-3125B OUTBOARD BEARING HIGH TEMP. Y-76.1
PCU-2\VAH-3125A1	Digital	PUMP P-3125A HIGH MOTOR VIBRATION Y-76.1
PCU-2\VAH-3125A2	Digital	PUMP P-3125A HIGH MOTOR VIBRATION Y-76.1
PCU-2\VAH-3125B1	Digital	PUMP P-3125B HIGH MOTOR VIBRATION Y-76.1
PCU-2\VAH-3125B2	Digital	PUMP P-3125B HIGH MOTOR VIBRATION Y-76.1
PCU-2\XA-3125A	Digital	BOOSTER PUMP P-3125A FAILURE Y-74.1
PCU-2\XA-3125B	Digital	BOOSTER PUMP P-3125B FAILURE Y-74.2
PCU-2\ZA-3125C	Digital	VALVE SOV-3125C POSITION SWITCH FAILURE Y-84.1
PCU-2\ZA-3125C1	Digital	VALVE SOV-3125C FAILED TO OPEN Y-84.1
PCU-2\ZA-3125C2	Digital	VALVE SOV-3125C FAILED TO CLOSE Y-84.1
PCU-2\ZA-3125D	Digital	VALVE SOV-3125D POSITION SWITCH FAILURE Y-86.1
PCU-2\ZA-3125D1	Digital	VALVE SOV-3125D FAILED TO OPEN Y-86.1
PCU-2\ZA-3125D2	Digital	VALVE SOV-3125D FAILED TO CLOSE Y-86.1
PCU-2\ZA-3125E	Digital	VALVE SOV-3125E POSITION SWITCH FAILURE Y-83.1
PCU-2\ZA-3125E1	Digital	VALVE SOV-3125E FAILED TO OPEN Y-83.1
PCU-2\ZA-3125E2	Digital	VALVE SOV-3125E FAILED TO CLOSE Y-83.1
PCU-2\ZA-3125G	Digital	VALVE SOV-3125G POSITION SWITCH FAILURE Y-85.1
PCU-2\ZA-3125G1	Digital	VALVE SOV-3125G FAILED TO OPEN Y-85.1
PCU-2\ZA-3125G2	Digital	VALVE SOV-3125G FAILED TO CLOSE Y-85.1
PCU-2\ZA-3173A	Digital	VALVE SOV-3173A POSITION SWITCH FAILURE Y-87.1
PCU-2\ZA-3173A1	Digital	VALVE SOV-3173A FAILED TO OPEN Y-87.1
PCU-2\ZA-3173A2	Digital	VALVE SOV-3173A FAILED TO CLOSE Y-87.1
PCU-2\ZA-3173B	Digital	VALVE SOV-3173B POSITION SWITCH FAILURE Y-87.2
PCU-2\ZA-3173B1	Digital	VALVE SOV-3173B FAILED TO OPEN Y-87.2
PCU-2\ZA-3173B2	Digital	VALVE SOV-3173B FAILED TO CLOSE Y-87.2
PCU-2\ZA-3182A	Digital	VALVE POSITION SWITCH FAILURE Y-71.1
PCU-2\ZA-3182A1	Digital	VALVE FAILED TO OPEN Y-71.1
PCU-2\ZA-3182A2	Digital	VALVE FAILED TO CLOSE Y-71.1
PCU-2\ZA-3182B	Digital	VALVE POSITION SWITCH FAILURE Y-71.1
PCU-2\ZA-3182B1	Digital	VALVE FAILED TO OPEN Y-71.1
PCU-2\ZA-3182B2	Digital	VALVE FAILED TO CLOSE Y-71.1
PCU-2\ZA-3183A	Digital	VALVE POSITION SWITCH FAILURE Y-71.1
PCU-2\ZA-3183A1	Digital	VALVE FAILED TO OPEN Y-71.1
PCU-2\ZA-3183A2	Digital	VALVE FAILED TO CLOSE Y-71.1
PCU-2\ZA-3183B	Digital	VALVE POSITION SWITCH FAILURE Y-71.1
PCU-2\ZA-3183B1	Digital	VALVE FAILED TO OPEN Y-71.1
PCU-2\ZA-3183B2	Digital	VALVE FAILED TO CLOSE Y-71.1
PCU-2\ZA-PUMPS	Digital	PCU-2 PUMP FAILURE FOR OVERVIEW SCREEN INDICATION
PCU-2\ZA-VALVES	Digital	PCU-2 VALVE FAILURE FOR OVERVIEW SCREEN INDICATION
PCU-3\ZA-3165A	Digital	VALVE POSITION SWITCH FAILURE Y71
PCU-3\ZA-3165A1	Digital	VALVE FAILED TO OPEN Y71
PCU-3\ZA-3165A2	Digital	VALVE FAILED TO CLOSE Y71
PCU-3\ZA-3165B	Digital	VALVE POSITION SWITCH FAILURE Y71
PCU-3\ZA-3165B1	Digital	VALVE FAILED TO OPEN Y71
PCU-3\ZA-3165B2	Digital	VALVE FAILED TO CLOSE Y71
PCU-3\ZA-3166A	Digital	VALVE POSITION SWITCH FAILURE Y71
PCU-3\ZA-3166A1	Digital	VALVE FAILED TO OPEN Y71
PCU-3\ZA-3166A2	Digital	VALVE FAILED TO CLOSE Y71
PCU-3\ZA-3166B	Digital	VALVE POSITION SWITCH FAILURE Y71
PCU-3\ZA-3166B1	Digital	VALVE FAILED TO OPEN Y71
PCU-3\ZA-3166B2	Digital	VALVE FAILED TO CLOSE Y71
PCU-3\ZA-3167A	Digital	VALVE POSITION SWITCH FAILURE Y88-1
PCU-3\ZA-3167A1	Digital	VALVE FAILED TO OPEN Y88-1
PCU-3\ZA-3167A2	Digital	VALVE FAILED TO CLOSE Y88-1
PCU-3\ZA-3167B	Digital	VALVE POSITION SWITCH FAILURE Y88-2
PCU-3\ZA-3167B1	Digital	VALVE FAILED TO OPEN Y88-2
PCU-3\ZA-3167B2	Digital	VALVE FAILED TO CLOSE Y88-2
PCU-3\ZA-3168A	Digital	VALVE POSITION SWITCH FAILURE Y81-3
PCU-3\ZA-3168A1	Digital	VALVE FAILED TO OPEN Y81-3
PCU-3\ZA-3168A2	Digital	VALVE FAILED TO CLOSE Y81-3
PCU-3\ZA-3168B	Digital	VALVE POSITION SWITCH FAILURE Y81-4
PCU-3\ZA-3168B1	Digital	VALVE FAILED TO OPEN Y81-4
PCU-3\ZA-3168B2	Digital	VALVE FAILED TO CLOSE Y81-4
PCU-3\ZA-3185A	Digital	VALVE POSITION SWITCH FAILURE Y81-1
PCU-3\ZA-3185A1	Digital	VALVE FAILED TO OPEN Y81-1
PCU-3\ZA-3185A2	Digital	VALVE FAILED TO CLOSE Y81-1
PCU-3\ZA-3185B	Digital	VALVE POSITION SWITCH FAILURE Y81-2
PCU-3\ZA-3185B1	Digital	VALVE FAILED TO OPEN Y81-2
PCU-3\ZA-3185B2	Digital	VALVE FAILED TO CLOSE Y81-2
PCU-3\ZA-VALVES	Digital	PCU-3 VALVE FAILURE FOR OVERVIEW SCREEN INDICATION

5.1.4 Logic and Control\Derived Tags\Mt_hb

Derived Tag file

5.1.4.1 Derived Tags Setup

Option	Selection
Description	Derived Tag file

Option	Selection
Evaluation	Periodic
Evaluation Interval	1.000000 (Seconds)

5.1.4.2 Derived Tags Information

	Tag Name	Expression	Description
1	PCU-1\HB_OCS_PLC1_MNT	if ({PCU-1\HB_OCS_PLC1_MNT} < 32000) then ({PCU-1\HB_OCS_PLC1_MNT} + 1) else 1	Heartbeat counter from this computer to the PLC
2	PCU-2\HB_OCS_PLC2_MNT	if ({PCU-2\HB_OCS_PLC2_MNT} < 32000) then ({PCU-2\HB_OCS_PLC2_MNT} + 1) else 1	Heartbeat counter from this computer to the PLC
3	PCU-3\HB_OCS_PLC3_MNT	if ({PCU-3\HB_OCS_PLC3_MNT} < 32000) then ({PCU-3\HB_OCS_PLC3_MNT} + 1) else 1	Heartbeat counter from this computer to the PLC
4	PCU-4\HB_OCS_PLC4_MNT	if ({PCU-4\HB_OCS_PLC4_MNT} < 32000) then ({PCU-4\HB_OCS_PLC4_MNT} + 1) else 1	Heartbeat counter from this computer to the PLC
5	PCU-5\HB_OCS_PLC5_MNT	if ({PCU-5\HB_OCS_PLC5_MNT} < 32000) then ({PCU-5\HB_OCS_PLC5_MNT} + 1) else 1	Heartbeat counter from this computer to the PLC
6	PCU-1\COM_OCS_1_MNT	not {PCU-1\HB_COMM_OK}	Set the local failure bit when the OCS detects a comm issue with the PLC
7	PCU-2\COM_OCS_2_MNT	not {PCU-2\HB_COMM_OK}	Set the local failure bit when the OCS detects a comm issue with the PLC
8	PCU-3\COM_OCS_3_MNT	not {PCU-3\HB_COMM_OK}	Set the local failure bit when the OCS detects a comm issue with the PLC
9	PCU-4\COM_OCS_4_MNT	not {PCU-4\HB_COMM_OK}	Set the local failure bit when the OCS detects a comm issue with the PLC
10	PCU-5\COM_OCS_5_MNT	not {PCU-5\HB_COMM_OK}	Set the local failure bit when the OCS detects a comm issue with the PLC

5.1.4.3 Database Tags Used by the Component

Tag Name	Tag Type	Tag Description
PCU-1\COM_OCS_1_MNT	Digital	Communiations failure with the PLC detected in this OIT
PCU-1\HB_COMM_OK	Digital	Communications from PLC currently OK
PCU-1\HB_OCS_PLC1_MNT	Analog	COMMUN. HEARTBEAT REGISTER FROM MAINTENANCE OIT TO PCU-1
PCU-2\COM_OCS_2_MNT	Digital	Communiations failure with the PLC detected in this OIT
PCU-2\HB_COMM_OK	Digital	Communications from PLC currently OK
PCU-2\HB_OCS_PLC2_MNT	Analog	COMMUN. HEARTBEAT REGISTER FROM MAINTENANCE OIT TO PCU-2
PCU-3\COM_OCS_3_MNT	Digital	Communiations failure with the PLC detected in this OIT
PCU-3\HB_COMM_OK	Digital	Communications from PLC currently OK
PCU-3\HB_OCS_PLC3_MNT	Analog	COMMUN. HEARTBEAT REGISTER FROM MAINTENANCE OIT TO PCU-3
PCU-4\COM_OCS_4_MNT	Digital	Communiations failure with the PLC detected in this OIT
PCU-4\HB_COMM_OK	Digital	Communications from PLC currently OK
PCU-4\HB_OCS_PLC4_MNT	Analog	COMMUN. HEARTBEAT REGISTER FROM MAINTENANCE OIT TO PCU-4
PCU-5\COM_OCS_5_MNT	Digital	Communiations failure with the PLC detected in this OIT
PCU-5\HB_COMM_OK	Digital	Communications from PLC currently OK
PCU-5\HB_OCS_PLC5_MNT	Analog	COMMUN. HEARTBEAT REGISTER FROM MAINTENANCE OIT TO PCU-5

5.1.5 Logic and Control\Derived Tags\Op_hb

Derived Tag file

5.1.5.1 Derived Tags Setup

Option	Selection
Description	Derived Tag file
Evaluation	Periodic
Evaluation Interval	1.000000 (Seconds)

5.1.5.2 Derived Tags Information

	Tag Name	Expression	Description
1	PCU-1\HB_OCS_PLC1_OPR	if ({PCU-1\HB_OCS_PLC1_OPR} < 32000) then ({PCU-1\HB_OCS_PLC1_OPR} + 1) else 1	Heartbeat counter from this computer to the PLC
2	PCU-2\HB_OCS_PLC2_OPR	if ({PCU-2\HB_OCS_PLC2_OPR} < 32000) then ({PCU-2\HB_OCS_PLC2_OPR} + 1) else 1	Heartbeat counter from this computer to the PLC
3	PCU-3\HB_OCS_PLC3_OPR	if ({PCU-3\HB_OCS_PLC3_OPR} < 32000) then ({PCU-3\HB_OCS_PLC3_OPR} + 1) else 1	Heartbeat counter from this computer to the PLC
4	PCU-4\HB_OCS_PLC4_OPR	if ({PCU-4\HB_OCS_PLC4_OPR} < 32000) then ({PCU-4\HB_OCS_PLC4_OPR} + 1) else 1	Heartbeat counter from this computer to the PLC
5	PCU-5\HB_OCS_PLC5_OPR	if ({PCU-5\HB_OCS_PLC5_OPR} < 32000) then ({PCU-5\HB_OCS_PLC5_OPR} + 1) else 1	Heartbeat counter from this computer to the PLC
6	PCU-1\COM_OCS_1_OPR	not {PCU-1\HB_COMM_OK}	Set the local failure bit when the OCS detects a comm issue with the PLC
7	PCU-2\COM_OCS_2_OPR	not {PCU-2\HB_COMM_OK}	Set the local failure bit when the OCS detects a comm issue with the PLC
8	PCU-3\COM_OCS_3_OPR	not {PCU-3\HB_COMM_OK}	Set the local failure bit when the OCS detects a comm issue with the PLC
9	PCU-4\COM_OCS_4_OPR	not {PCU-4\HB_COMM_OK}	Set the local failure bit when the OCS detects a comm issue with the PLC
10	PCU-5\COM_OCS_5_OPR	not {PCU-5\HB_COMM_OK}	Set the local failure bit when the OCS detects a comm issue with the PLC

5.1.5.3 Database Tags Used by the Component

Tag Name	Tag Type	Tag Description
PCU-1\COM_OCS_1_OPR	Digital	Communiations failure with the PLC detected in this OIT
PCU-1\HB_COMM_OK	Digital	Communications from PLC currently OK

Tag Name	Tag Type	Tag Description
PCU-1\HB_OCS_PLC1_OPR	Analog	COMMUN. HEARTBEAT REGISTER FROM OPERATIONS OIT TO PCU-1
PCU-2\COM_OCS_2_OPR	Digital	Communiations failure with the PLC detected in this OIT
PCU-2\HB_COMM_OK	Digital	Communications from PLC currently OK
PCU-2\HB_OCS_PLC2_OPR	Analog	COMMUN. HEARTBEAT REGISTER FROM OPERATIONS OIT TO PCU-2
PCU-3\COM_OCS_3_OPR	Digital	Communiations failure with the PLC detected in this OIT
PCU-3\HB_COMM_OK	Digital	Communications from PLC currently OK
PCU-3\HB_OCS_PLC3_OPR	Analog	COMMUN. HEARTBEAT REGISTER FROM OPERATIONS OIT TO PCU-3
PCU-4\COM_OCS_4_OPR	Digital	Communiations failure with the PLC detected in this OIT
PCU-4\HB_COMM_OK	Digital	Communications from PLC currently OK
PCU-4\HB_OCS_PLC4_OPR	Analog	COMMUN. HEARTBEAT REGISTER FROM OPERATIONS OIT TO PCU-4
PCU-5\COM_OCS_5_OPR	Digital	Communiations failure with the PLC detected in this OIT
PCU-5\HB_COMM_OK	Digital	Communications from PLC currently OK
PCU-5\HB_OCS_PLC5_OPR	Analog	COMMUN. HEARTBEAT REGISTER FROM OPERATIONS OIT TO PCU-5

5.2 Logic and Control\Events

5.2.1 Logic and Control\Events\Mt_hb

Communications Heart Beat Event file

5.2.1.1 Event Detector Setup

Option	Selection
Description	Communications Heart Beat Event file
Evaluation	Periodic
Evaluation Interval	5.000000 (Seconds)

5.2.1.2 Event Detector Information

	Enabled	Action	Expression	Description
1	Yes	PCU-1\HB_COMM_TIME = ({PCU-1\HB_COMM_TIME} + 1)	({PCU-1\HB_PLC1_OCS} == {PCU-1\HB_OCS_PLC1}) && system\BlinkSlow	Start of OCS to PLC Heart Beat Sequencing (Four Events)
2	Yes	PCU-1\HB_COMM_TIME = 0; PCU-1\HB_OCS_PLC1 = {PCU-1\HB_PLC1_OCS}	({PCU-1\HB_PLC1_OCS} <> {PCU-1\HB_OCS_PLC1}) && system\BlinkSlow	Heart Beat Sequencing Step #2
3	Yes	PCU-1\COM-OCS_1 = 1; PCU-1\HB_COMM_TIME = 10	{PCU-1\HB_COMM_TIME} > 10	Heart Beat Sequencing Step #3
4	Yes	PCU-1\COM-OCS_1 = 0	{PCU-1\HB_COMM_TIME} < 10	Heart Beat Sequencing Step #4
5	Yes	PCU-2\HB_COMM_TIME = {PCU-2\HB_COMM_TIME} + 1	({PCU-2\HB_PLC2_OCS} == {PCU-2\HB_OCS_PLC2}) && system\BlinkSlow	Start of OCS to PLC Heart Beat Sequencing (Five Events)
6	Yes	PCU-2\HB_COMM_TIME = 0; PCU-2\HB_OCS_PLC2 = {PCU-2\HB_PLC2_OCS}	({PCU-2\HB_PLC2_OCS} <> {PCU-2\HB_OCS_PLC2}) && system\BlinkSlow	Heart Beat Sequencing Step #3
7	Yes	PCU-2\COM-OCS_2 = 1; PCU-2\HB_COMM_TIME = 10	{PCU-2\HB_COMM_TIME} > 10	Heart Beat Sequencing Step #4
8	Yes	PCU-2\COM-OCS_2 = 0	{PCU-2\HB_COMM_TIME} < 10	Heart Beat Sequencing Step #5
9	Yes	PCU-3\HB_COMM_TIME = {PCU-3\HB_COMM_TIME} + 1	({PCU-3\HB_PLC3_OCS} == {PCU-3\HB_OCS_PLC3}) && system\BlinkSlow	Start of OCS to PLC Heart Beat Sequencing (Five Events)
10	Yes	PCU-3\HB_COMM_TIME = 0; PCU-3\HB_OCS_PLC3 = {PCU-3\HB_PLC3_OCS}	({PCU-3\HB_PLC3_OCS} <> {PCU-3\HB_OCS_PLC3}) && system\BlinkSlow	Heart Beat Sequencing Step #3
11	Yes	PCU-3\COM-OCS_3 = 1; PCU-3\HB_COMM_TIME = 10	{PCU-3\HB_COMM_TIME} > 10	Heart Beat Sequencing Step #4
12	Yes	PCU-3\COM-OCS_3 = 0	{PCU-3\HB_COMM_TIME} < 10	Heart Beat Sequencing Step #5
13	Yes	PCU-4\HB_COMM_TIME = {PCU-4\HB_COMM_TIME} + 1	({PCU-4\HB_PLC4_OCS} == {PCU-4\HB_OCS_PLC4}) && system\BlinkSlow	Start of OCS to PLC Heart Beat Sequencing (Five Events)
14	Yes	PCU-4\HB_COMM_TIME = 0; PCU-4\HB_OCS_PLC4 = {PCU-4\HB_PLC4_OCS}	({PCU-4\HB_PLC4_OCS} <> {PCU-4\HB_OCS_PLC4}) && system\BlinkSlow	Heart Beat Sequencing Step #3
15	Yes	PCU-4\COM-OCS_4 = 1; PCU-4\HB_COMM_TIME = 10	{PCU-4\HB_COMM_TIME} > 10	Heart Beat Sequencing Step #4
16	Yes	PCU-4\COM-OCS_4 = 0	{PCU-4\HB_COMM_TIME} < 10	Heart Beat Sequencing Step #5
17	Yes	PCU-5\HB_COMM_TIME = {PCU-5\HB_COMM_TIME} + 1	({PCU-5\HB_PLC5_OCS} == {PCU-5\HB_OCS_PLC5}) && system\BlinkSlow	Start of OCS to PLC Heart Beat Sequencing (Five Events)
18	Yes	PCU-5\HB_COMM_TIME = 0; PCU-5\HB_OCS_PLC5 = {PCU-5\HB_PLC5_OCS}	({PCU-5\HB_PLC5_OCS} <> {PCU-5\HB_OCS_PLC5}) && system\BlinkSlow	Heart Beat Sequencing Step #3
19	Yes	PCU-5\COM-OCS_5 = 1; PCU-5\HB_COMM_TIME = 10	{PCU-5\HB_COMM_TIME} > 10	Heart Beat Sequencing Step #4
20	Yes	PCU-5\COM-OCS_5 = 0	{PCU-5\HB_COMM_TIME} < 10	Heart Beat Sequencing Step #5

5.2.1.3 Database Tags Used by the Component

Tag Name	Tag Type	Tag Description
PCU-1\COM-OCS_1	Digital	COMMUN. WITH PCU-1 IGNORED - DETECTED AT OCS
PCU-1\HB_COMM_TIME	Analog	ACCUMULATED TIME FOR THE COMMUNICATION CHECK HEART-BEAT
PCU-1\HB_OCS_PLC1	Digital	HEARTBEAT FROM OCS TO PLC-1
PCU-1\HB_PLC1_OCS	Digital	HEARTBEAT FROM PLC-1 TO OCS
PCU-2\COM-OCS_2	Digital	COMMUN. WITH PCU-2 IGNORED - DETECTED AT OCS
PCU-2\HB_COMM_TIME	Analog	ACCUMULATED TIME FOR THE COMMUNICATION CHECK HEART-BEAT
PCU-2\HB_OCS_PLC2	Digital	HEARTBEAT FROM OCS TO PLC-2
PCU-2\HB_PLC2_OCS	Digital	HEARTBEAT FROM PLC-2 TO OCS
PCU-3\COM-OCS_3	Digital	COMMUN. WITH PCU-3 IGNORED - DETECTED AT OCS
PCU-3\HB_COMM_TIME	Analog	ACCUMULATED TIME FOR THE COMMUNICATION CHECK HEART-BEAT
PCU-3\HB_OCS_PLC3	Digital	HEARTBEAT FROM OCS TO PLC-3

Tag Name	Tag Type	Tag Description
PCU-3\HB_PLC3_OCS	Digital	HEARTBEAT FROM PLC-3 TO OCS
PCU-4\COM-OCS_4	Digital	COMMUN. WITH PCU-4 IGNORED - DETECTED AT OCS
PCU-4\HB_COMM_TIME	Analog	ACCUMULATED TIME FOR THE COMMUNICATION CHECK HEART-BEAT
PCU-4\HB_OCS_PLC4	Digital	HEARTBEAT FROM OCS TO PLC-4
PCU-4\HB_PLC4_OCS	Digital	HEARTBEAT FROM PLC-4 TO OCS
PCU-5\COM-OCS_5	Digital	COMMUN. WITH PCU-5 IGNORED - DETECTED AT OCS
PCU-5\HB_COMM_TIME	Analog	ACCUMULATED TIME FOR THE COMMUNICATION CHECK HEART-BEAT
PCU-5\HB_OCS_PLC5	Digital	HEARTBEAT FROM OCS TO PLC-5
PCU-5\HB_PLC5_OCS	Digital	HEARTBEAT FROM PLC-5 TO OCS
system\BlinkSlow	Digital	Changes every 500 ms

5.2.2 Logic and Control\Events\System

Event file

5.2.2.1 Event Detector Setup

Option	Selection
Description	Event file
Evaluation	Periodic
Evaluation Interval	1.000000 (Seconds)

5.2.2.2 Event Detector Information

	Enabled	Action	Expression	Description
1	Yes	Mt_strt	STATION_CHECK && (COMPUTER_NAME == "XSITE1")	Run the station specific start-up macro on the Maintenance station.
2	Yes	Op_strt	STATION_CHECK && (COMPUTER_NAME == "XSITE2")	Run the station specific start-up macro on the Operations station.
3	Yes	Engr_strt	STATION_CHECK && ((COMPUTER_NAME == "wc78262") || (COMPUTER_NAME == "WC78262") || (COMPUTER_NAME == "wc78268") || (COMPUTER_NAME == "WC78268") || (COMPUTER_NAME == "Jim_M") || (COMPUTER_NAME == "JIM_M"))	Run the station specific start-up macro on an Engineering computer
4	Yes	{PCU-3\D_OVR_STAT_M} = 0	{PCU-3\D_OVR_STAT_M} && not {PCU-3\D_OVR_REQ_M} && MAINTENANCE_STATION	Clear the overview screen status bit on the Maintenance station.
5	Yes	AppStart SyncTAD /s; Pause 5; Display 01overvw; {PCU-3\D_OVR_STAT_O} = 1	{PCU-3\D_OVR_REQ_O} && not {PCU-3\D_OVR_REQ_M} && not MAINTENANCE_STATION	Display the overview screen on the Operations station.
6	Yes	{PCU-3\D_OVR_STAT_O} = 0	{PCU-3\D_OVR_STAT_O} && not {PCU-3\D_OVR_REQ_O} && not MAINTENANCE_STATION	Clear the overview screen status bit on the Operations station.
7	Yes	AppStart SyncTAD /s	(system\Hour == 3) && (system\Minute == 0) && MAINTENANCE_STATION	Synchronize the PLC and RSView PC clocks - Maintenance station.
8	Yes	AppStart SyncTAD /s	(system\Hour == 3) && (system\Minute == 30) && not MAINTENANCE_STATION	Synchronize the PLC and RSView PC clocks - Operations station.
9	Yes	KEY /R; KEY GLK_LEV0	SECURITY < 1	Global key set-up for view only.
10	Yes	KEY /R; KEY GLK_LEV1	SECURITY >= 1	Global key set-up with alarm acknowledge capability.
11	Yes	DataLogOn R_Transf; R_TRANSF_DLG_EN = 1	{PCU-3\TR_EN_1001} OR {PCU-3\TR_EN_1002A} OR {PCU-3\TR_EN_1002B} OR {PCU-3\TR_EN_1003}	ENABLE THE TRANSFER DATA LOGGING BEFORE A TRANSFER
12	Yes	DataLogSnapshot R_Transf; DataLogOff R_Transf	(NOT ({PCU-3\TR_EN_1001} OR {PCU-3\TR_EN_1002A} OR {PCU-3\TR_EN_1002B} OR {PCU-3\TR_EN_1003}) AND R_TRANSF_DLG_EN)	SHUT DOWN THE TRANSFER DATA LOGGING AFTER TRANSFER
13	Yes	PCU-1\COM-OCS_1 = 1	comm_err({PCU-1\HB_OCS_PLC1}) || comm_err({PCU-1\HB_PLC1_OCS})	OIT to PLC communications checking to detect failures.
14	Yes	PCU-1\COM-OCS_1 = 0	{PCU-1\COM-OCS_1} && not (comm_err({PCU-1\HB_OCS_PLC1}) || comm_err({PCU-1\HB_PLC1_OCS}))	OIT to PLC communications checking to clear a failure.
15	Yes	PCU-2\COM-OCS_2 = 1	comm_err({PCU-2\HB_OCS_PLC2}) || comm_err({PCU-2\HB_PLC2_OCS})	OIT to PLC communications checking to detect failures.
16	Yes	PCU-2\COM-OCS_2 = 0	{PCU-2\COM-OCS_2} && not (comm_err({PCU-2\HB_OCS_PLC2}) || comm_err({PCU-2\HB_PLC2_OCS}))	OIT to PLC communications checking to clear a failure.
17	Yes	PCU-3\COM-OCS_3 = 1	comm_err({PCU-3\HB_OCS_PLC3}) || comm_err({PCU-3\HB_PLC3_OCS})	OIT to PLC communications checking to detect failures.
18	Yes	PCU-3\COM-OCS_3 = 0	{PCU-3\COM-OCS_3} && not (comm_err({PCU-3\HB_OCS_PLC3}) || comm_err({PCU-3\HB_PLC3_OCS}))	OIT to PLC communications checking to clear a failure.
19	Yes	PCU-4\COM-OCS_4 = 1	comm_err({PCU-4\HB_OCS_PLC4}) || comm_err({PCU-4\HB_PLC4_OCS})	OIT to PLC communications checking to detect failures.
20	Yes	PCU-4\COM-OCS_4 = 0	{PCU-4\COM-OCS_4} && not (comm_err({PCU-4\HB_OCS_PLC4}) || comm_err({PCU-4\HB_PLC4_OCS}))	OIT to PLC communications checking to clear a failure.
21	Yes	PCU-5\COM-OCS_5 = 1	comm_err({PCU-5\HB_OCS_PLC5}) || comm_err({PCU-5\HB_PLC5_OCS})	OIT to PLC communications checking to detect failures.
22	Yes	PCU-5\COM-OCS_5 = 0	{PCU-5\COM-OCS_5} && not (comm_err({PCU-5\HB_OCS_PLC5}) || comm_err({PCU-5\HB_PLC5_OCS}))	OIT to PLC communications checking to clear a failure.

5.2.2.3 Database Tags Used by the Component

Tag Name	Tag Type	Tag Description
COMPUTER_NAME	String	COMPUTER NAME READ FROM THE RSVIEW OBJECT MODEL
MAINTENANCE_STATION	Digital	OIT STATION SELECTION - TRUE=MAINTENANCE, FALSE=OPERATOR
PCU-1\COM-OCS_1	Digital	COMMUN. WITH PCU-1 IGNORED - DETECTED AT OCS
PCU-1\HB_OCS_PLC1	Digital	HEARTBEAT FROM OCS TO PLC-1
PCU-1\HB_PLC1_OCS	Digital	HEARTBEAT FROM PLC-1 TO OCS
PCU-2\COM-OCS_2	Digital	COMMUN. WITH PCU-2 IGNORED - DETECTED AT OCS
PCU-2\HB_OCS_PLC2	Digital	HEARTBEAT FROM OCS TO PLC-2
PCU-2\HB_PLC2_OCS	Digital	HEARTBEAT FROM PLC-2 TO OCS
PCU-3\COM-OCS_3	Digital	COMMUN. WITH PCU-3 IGNORED - DETECTED AT OCS
PCU-3\D_OVR_REQ_M	Digital	DISPLAY OVERVIEW SCREEN ON MAINTENANCE REQUEST
PCU-3\D_OVR_REQ_O	Digital	DISPLAY OVERVIEW SCREEN ON OPERATIONS REQUEST
PCU-3\D_OVR_STAT_M	Digital	DISPLAY OVERVIEW SCREEN ON MAINTENANCE
PCU-3\D_OVR_STAT_O	Digital	DISPLAY OVERVIEW SCREEN ON OPERATIONS
PCU-3\HB_OCS_PLC3	Digital	HEARTBEAT FROM OCS TO PLC-3
PCU-3\HB_PLC3_OCS	Digital	HEARTBEAT FROM PLC-3 TO OCS
PCU-3\TR_EN_1001	Digital	ENABLE TRANSFER 1 241-SY-A TO 241-A-B Y-70.1
PCU-3\TR_EN_1002A	Digital	ENABLE TRANSFER 2A 241-SY-B TO 241-A-A Y-70.1
PCU-3\TR_EN_1002B	Digital	ENABLE TRANSFER 2B 241-SY-B TO 241-A-A Y-70.1
PCU-3\TR_EN_1003	Digital	ENABLE TRANSFER 3 241-A-B TO 241-SY-A Y-70.1
PCU-4\COM-OCS_4	Digital	COMMUN. WITH PCU-4 IGNORED - DETECTED AT OCS
PCU-4\HB_OCS_PLC4	Digital	HEARTBEAT FROM OCS TO PLC-4
PCU-4\HB_PLC4_OCS	Digital	HEARTBEAT FROM PLC-4 TO OCS
PCU-5\COM-OCS_5	Digital	COMMUN. WITH PCU-5 IGNORED - DETECTED AT OCS
PCU-5\HB_OCS_PLC5	Digital	HEARTBEAT FROM OCS TO PLC-5
PCU-5\HB_PLC5_OCS	Digital	HEARTBEAT FROM PLC-5 TO OCS
R_TRANSF_DLG_EN	Digital	ENABLE THE TRANSFER DATA LOGGING THE FIRST TIME IT IS USED
SECURITY	Analog	PRESENT SECURITY LEVEL
STATION_CHECK	Digital	INITIATE CHECKING OIT STAION ID ON POWER-UP
system\Hour	Analog	Hour of day (0 - 23)
system\Minute	Analog	Minutes (0 - 59)

5.3 Logic and Control\Macro

5.3.1 Logic and Control\Macro\Alm_Suppress

5.3.1.1 Macro File

Description

```
!===== Macro File created  02/02/07 ==============================
! Macros are lists of commands, with one command per line
! See Help or the manual for a list of commands and their parameters
!==========================================================
!
! Enter alarms to be suppressed here using the format:
!   SuppressOn {tagname}
!
SuppressOn PCU-1\COM-1_OCS
SuppressOn PCU-1\XA-058W
SuppressOn PCU-1\TAH-302C-1A
SuppressOn PCU-1\TAH-302C-1B
SuppressOn PCU-1\PI-368_A
SuppressOn PCU-2\COM-2_OCS
SuppressOn PCU-3\COM-3_OCS
SuppressOn PCU-3\PAH-3168
SuppressOn PCU-3\YA-3102A
SuppressOn PCU-3\PI-3126B_A
SuppressOn PCU-3\PI-3167_A
SuppressOn PCU-3\PI-3168_A
SuppressOn PCU-4\COM-4_OCS
SuppressOn PCU-4\DI-850_A
SuppressOn PCU-4\TAH_CAB_PLC4
SuppressOn PCU-5\COM-5_OCS
```

5.3.1.2 Database Tags Used by the Component

Tag Name	Tag Type	Tag Description
PCU-1\COM-1_OCS	Digital	COMMUN. WITH OCS IGNORED
PCU-1\PI-368_A	Digital	PCU-1 INPUT ANALOG OVER OR UNDER RANGE ALARM
PCU-1\TAH-302C-1A	Digital	CIRCULATION HEATER #1 HTR-302C-1 OUTLET TEMP [OFF = ALARM]
PCU-1\TAH-302C-1B	Digital	CIRCULATION HEATER #2 HTR-302C-2 OUTLET TEMP [OFF = ALARM]
PCU-1\XA-058W	Digital	200-W MASTER SHUTDOWN CIRCUIT ACTIVATED Y-77.1
PCU-2\COM-2_OCS	Digital	COMMUN. WITH OCS IGNORED
PCU-3\COM-3_OCS	Digital	COMMUNICATION WITH OCS IGNORED
PCU-3\PAH-3168	Digital	VALVE SOV-3168A/B FAILURE Y73
PCU-3\PI-3126B_A	Digital	PCU-3 INPUT ANALOG OVER OR UNDER RANGE ALARM
PCU-3\PI-3167_A	Digital	PCU-3 INPUT ANALOG OVER OR UNDER RANGE ALARM
PCU-3\PI-3168_A	Digital	PCU-3 INPUT ANALOG OVER OR UNDER RANGE ALARM
PCU-3\YA-3102A	Digital	ENCASEMENT RUPTURE DISK ACTIVATED [OFF = ALARM] OIT
PCU-4\COM-4_OCS	Digital	COMMUN. WITH OCS IGNORED
PCU-4\DI-850_A	Digital	PCU-4 INPUT ANALOG OVER OR UNDER RANGE ALARM

Tag Name	Tag Type	Tag Description
PCU-4\TAH_CAB_PLC4	Digital	PLC-4 CABINET HIGH TEMPERATURE [OFF = ALARM]
PCU-5\COM-5_OCS	Digital	COMMUN. WITH OCS IGNORED

5.3.2 Logic and Control\Macro\Dsp_load

5.3.2.1 Macro File

Description

```
!===== Macro File created  12/12/96 ==============================
! Macros are lists of commands, with one command per line
! See Help or the manual for a list of commands and their parameters
!=============================================================
!
! Load all of the screens into memory for quicker access during run mode.
!   NOTE:  Pop-up screens that are passed parameters are not cached
!
PB_INDICATOR = 0
VALVE_NAME = "Start-Up"
!
DISPLAY 01overvw /Z
DISPLAY 02help /Z
DISPLAY 03almsmc /Z
DISPLAY 03almsmv /Z
DISPLAY 04divbox /Z
DISPLAY 05p3125a /Z
DISPLAY 06p3125b /Z
DISPLAY 07draina /Z
DISPLAY 08drainb /Z
DISPLAY 09ventsn /Z
DISPLAY 10liftsn /Z
DISPLAY 11sy101 /Z
DISPLAY 12sy102 /Z
DISPLAY 13flush /Z
DISPLAY Caustic /Z
DISPLAY Pmp3100a /Z
DISPLAY Pmp350pid /Z
```

5.3.2.2 Database Tags Used by the Component

Tag Name	Tag Type	Tag Description
PB_INDICATOR	Analog	VALUE INDICATING THE PUSHBUTTON BEING ACKNOWLEDGED
VALVE_NAME	String	VALVE NAME FOR DISPLAY IN THE VALVE POP-UPS

5.3.3 Logic and Control\Macro\Engr_strt

5.3.3.1 Macro File

Description

```
!===== Macro File created  12/12/96 ==============================
! Macros are lists of commands, with one command per line
! See Help or the manual for a list of commands and their parameters
!=============================================================
!
! Initiate the data logging set-ups
!DataLogOn Dlg_Test
!DataLogOn Dlg_Tst0
!DataLogOn Dlg_Tst1
!DataLogOn Spd_Test
DataLogOn Cross Site
!
! Initiate the graphic visibility and clear the station check flags
STATION_CHECK = 0
MAINTENANCE_STATION = 1
!
! Initiate the DDE capabilities (for Maintenance PC only)
!RTDataWriteEnable /QUIET /NETDDE
!
DISPLAY 01overvw
!
```

5.3.3.2 Database Tags Used by the Component

Tag Name	Tag Type	Tag Description
MAINTENANCE_STATION	Digital	OIT STATION SELECTION - TRUE=MAINTENANCE, FALSE=OPERATOR
STATION_CHECK	Digital	INITIATE CHECKING OIT STAION ID ON POWER-UP

5.3.4 Logic and Control\Macro\Mt_strt

5.3.4.1 Macro File

Description

Description

```
! Macros are lists of commands, with one command per line
! See Help or the manual for a list of commands and their parameters
!==========================================================
!
! Initiate the data logging set-ups
!DataLogOn Dlg_Test
!DataLogOn Dlg_Tst0
!DataLogOn Dlg_Tst1
!DataLogOn Spd_Test
DataLogOn Cross Site
!
! Initiate the graphic visibility and clear the station check flags
STATION_CHECK = 0
MAINTENANCE_STATION = 1
DerivedOn Mt_hb
!
! Initiate the DDE capabilities (for Maintenance PC only)
!RTDataWriteEnable /QUIET /NETDDE
!
DISPLAY 00mode
!
```

5.3.4.2 Database Tags Used by the Component

Tag Name	Tag Type	Tag Description
MAINTENANCE_STATION	Digital	OIT STATION SELECTION - TRUE=MAINTENANCE, FALSE=OPERATOR
STATION_CHECK	Digital	INITIATE CHECKING OIT STAION ID ON POWER-UP

5.3.5 Logic and Control\Macro\Op_strt

5.3.5.1 Macro File

Description

```
!===== Macro File created  12/12/96 ==============================
! Macros are lists of commands, with one command per line
! See Help or the manual for a list of commands and their parameters
!==========================================================
!
! Initiate the data logging set-ups
!DataLogOn Dlg_Test
!DataLogOn Dlg_Tst0
!DataLogOn Dlg_Tst1
!DataLogOn Spd_Test
DataLogOn Cross Site
!
! Initiate the graphic visibility and clear the station check flags
STATION_CHECK = 0
MAINTENANCE_STATION = 0
DerivedOn Op_hb
!
DISPLAY 00mode
!
```

5.3.5.2 Database Tags Used by the Component

Tag Name	Tag Type	Tag Description
MAINTENANCE_STATION	Digital	OIT STATION SELECTION - TRUE=MAINTENANCE, FALSE=OPERATOR
STATION_CHECK	Digital	INITIATE CHECKING OIT STAION ID ON POWER-UP

5.3.6 Logic and Control\Macro\StartMac

5.3.6.1 Macro File

Description

```
!===== Macro File created  12/12/00 ==============================
! Macros are lists of commands, with one command per line
! See Help or the manual for a list of commands and their parameters
!==========================================================
!
! Load all of the screens into memory for quicker access during run mode.
Alm_Suppress
Dsp_load
!
! Initiate the event detectors
{PCU-3\D_OVR_STAT_M} = 0
{PCU-3\D_OVR_STAT_O} = 0
R_TRANSF_DLG_EN = 0
```

Description

```
STATION_CHECK = 0
EventOn System
!
! Initiate the system security and global keys
SECURITY = 0
Key Glk_lev0
!
! Initiate the derived tag and alarm detector functions
DerivedOn Global
DerivedOn Comm_Check
DerivedOn Comm_Reset
AlarmOn
!
! Initiate the station specific functionality
VbaExec GetComputerName COMPUTER_NAME
Pause 1
Display 00error /CC
STATION_CHECK = 1
!
```

5.3.6.2 Database Tags Used by the Component

Tag Name	Tag Type	Tag Description
PCU-3\D_OVR_STAT_M	Digital	DISPLAY OVERVIEW SCREEN ON MAINTENANCE
PCU-3\D_OVR_STAT_O	Digital	DISPLAY OVERVIEW SCREEN ON OPERATIONS
R_TRANSF_DLG_EN	Digital	ENABLE THE TRANSFER DATA LOGGING THE FIRST TIME IT IS USED
SECURITY	Analog	PRESENT SECURITY LEVEL
STATION_CHECK	Digital	INITIATE CHECKING OIT STAION ID ON POWER-UP

5.3.7 Logic and Control\Macro\StopMac

Description

```
!===== Macro File created  06/24/97 ==============================
! Macros are lists of commands, with one command per line
! See Help or the manual for a list of commands and their parameters
!=============================================================
!
! System shut-down sequencing
LOGOUT
!
! Turn off the DDE capabilities (for Maintenance PC only)
RTDataServerOff
!
! Turn off any active datalogging models
DataLogOff *
!
! Turn off the event detectors
EventOff System
!
! Display the Project manager
ProjectShow
!
```

5.4 Logic and Control\Global Keys

5.4.1 Logic and Control\Global Keys\Glk_lev0

	Key	Label	Press Action	Repeat Action	Release Action
1	Ctrl+F1	HELP SCREEN	Display 02HELP		
2	F11	ALARM SUMMARY	Display 03almsmv		
3	F12	ALARM SILENCE	SilenceAll		
4	F2	OVERVIEW	Display 01overvw		
5	F3	102-SY TANK	Display 12sy102		
6	Ctrl+F3	101-SY TANK	Display 11sy101		
7	F4	PCU-1 FLUSH	Display 13flush		
8	F5	PCU-2 DIVERSION BOX	Display 04divbox		
9	F6	PCU-3 VENT STATION	Display 09ventsn		
10	F7	PCU-4 LIFT STATION	Display 10liftsn		
11	F8	EXIT FROM SCREEN	Abort Display 05p3125a		
			Abort Display 06p3125b		
			Abort Display 07draina		
			Abort Display 08drainb		
12	F9	EXIT FROM POP-UP'S	Abort Display Caustic		
			Abort Display Entry		
			Abort Display Mov-2p-d		
			Abort Display Mov-2pos		
			Abort Display Mov-3pos		
			Abort Display Pb_ack		
			Abort Display Pmp3100a		
			Abort Display Pmp350pid		
			Abort Display Sov-2pos		

5.4.2 Logic and Control\Global Keys\Glk_lev1

	Key	Label	Press Action	Repeat Action	Release Action
1	Ctrl+F1	HELP SCREEN	Display 02HELP		
2	F11	ALARM SUMMARY	Display 03almsmc		
3	F12	ALARM SILENCE	SilenceAll		
4	F2	OVERVIEW	Display 01overvw		
5	F3	102-SY TANK	Display 12sy102		
6	Ctrl+F3	101-SY TANK	Display 11sy101		
7	F4	PCU-1 FLUSH	Display 13flush		
8	F5	PCU-2 DIVERSION BOX	Display 04divbox		
9	F6	PCU-3 VENT STATION	Display 09ventsn		
10	F7	PCU-4 LIFT STATION	Display 10liftsn		
11	F8	EXIT FROM SCREEN	Abort Display 05p3125a		
			Abort Display 06p3125b		
			Abort Display 07draina		
			Abort Display 08drainb		
12	F9	EXIT FROM POP-UP'S	Abort Display Caustic		
			Abort Display Entry		
			Abort Display Mov-2p-d		
			Abort Display Mov-2pos		
			Abort Display Mov-3pos		
			Abort Display Pb_ack		
			Abort Display Pmp3100a		
			Abort Display Pmp350pid		
			Abort Display Sov-2pos		

DISTRIBUTION SHEET

To	From	Page 1 of 1
ALL	WFO Engineering	Date 2/5/2006
Project Title/Work Order		EDT No. N/A
HANFORD CROSS-SITE TRANSFER SYSTEM PROJECT W-058 OPERATOR INTERFACE DOCUMENTATION		ECN No. 724466 R0

Name	MSIN	Text With All Attach.	Text Only	Attach./ Appendix Only	EDT/ECN Only
WD WINKELMAN	S5-25	X			
DT HEIMBERGER	S5-25	X			
RL BROOKS	S5-03	X			
B PARNELL	S5-03	X			
V NGUYEN	S5-07	X			
TC OTEN	S5-07	X			