MAY 10 1991 STA 4

ENGINEERING DATA TRANSMITTAL

Page 1 of 1

1. EDT 126263

2. To: (Receiving Organization) Distribution

3. From: (Originating Organization) Tank Farm Projects

4. Related EDT No: N/A

5. Proj/Prog/Dept/Div: W-058

6. Cog/Proj Engr: J. M. Light

7. Purchase Order No: N/A

8. Originator Remarks:
The CDR for Project W-058, The Replacement Cross-Site Transfer System, is being issued for your signature. CDR comments have been incorporated.

9. Equip/Component No:

10. System/Bldg/Facility:

11. Receiver Remarks:
D.M. Bogen signature is approval for issuance/release only. No technical review is implied or performed.

12. Major Assm Dwg No:

13. Permit/Permit Application No.

14. Required Response Date:

15 **DATA TRANSMITTED**

(A) Item No.	(B) Document/Drawing No.	(C) Sheet No.	(D) Rev No.	(E) Title or Description of Data Transmitted	(F) Impact Level	(G) Reason for Transmittal	(H) Originator Disposition	(I) Receiver Disposition
1	WHC-SD-W058-CDR-001		0	CDR Replacement Cross-Site Transfer System	1	1		

16 **KEY**

Impact Level (F)	Reason for Transmittal (G)	Disposition (H) & (I)
1, 2, 3, or 4 see MRP 5.43 and EP-1.7	1. Approval 2. Release 3. Information 4. Review 5. Post-Review 6. Dist (Receipt Acknow. Required)	1. Approved 2. Approved w/comment 3. Disapproved w/comment 4. Reviewed no/comment 5. Reviewed w/comment 6. Receipt acknowledged

17. **SIGNATURE/DISTRIBUTION**
(See Impact Level for required signatures)

(G) Reason	(H) Disp	(J) Name	(K) Signature	(L) Date	(M) MSIN	(J) Name	(K) Signature	(L) Date	(M) MSIN	(G) Reason	(H) Disp
1	1	Cog./Proj. Eng J.M. Light	J.M. Light	3-13-91	R3-49	BY W. R. Brookshier Safeguards and Security			L4-02		
1	1	Cog./Proj. Eng. Mgr. R.L. Fritz	RLF		R3-49						
1	1	QA J.A. Peltier		3/14/91	S1-54						
1	1	Safety M.N. Islam	Islam	3-18-91	H5-53						
1	1	Tec. Rep. - L.J. Rust			T4-01						
1	2	Upgrades Mgr - D.M. Bogen			S0-09						
1	1	ENVIR. ASSURANCE - J.T. Donian		3/27/91	B2-16	DOE	K. Williams				2

18. J.M. Light 3/13/91
Signature of EDT Originator — Date

19. 3/27/91
Authorized Representative for Receiving Organization — Date

20. RLF 3-27-91
Cognizant/Project Engineer's Manager — Date

21. DOE APPROVAL (if required)
Ltr No. 91-SRD-055
- [ ] Approved
- [x] Approved w/comments
- [ ] Disapproved w/comments

BD-7400-172 (2/89)

INSTRUCTIONS FOR COMPLETION OF THE ENGINEERING DATA TRANSMITTAL

(USE BLACK INK OR TYPE)

BLOCK	TITLE	
(1)*	EDT	• Enter the assigned EDT number.
(2)	To: (Receiving Organization)	• Enter the individual's name, title of the organization, or entity (e.g., Distribution) that the EDT is being transmitted to
(3)	From: (Orginating Organization)	• Enter the title of the organization originating and transmitting the EDT.
(4)	Related EDT	• Enter EDT numbers which relate to the data being transmitted.
(5)*	Project/Program/ Dept//Div	• Enter the Project/Program/Department/Division title or Project/Program acronym or Project Number. Work Order Number or Organization Code.
(6)	Cognizant /Project Engineer	• Enter the name of the individual identified as being responsible for coordinating disposition of the EDT
(7)	Purchase Order No.	• Enter related Purchase Order (P.O.) Number, if available.
(8)*	Originator Remarks	• Enter special or additional comments concerning transmittal, or "Key" retrieval words may be entered
(9)	Equipment/Component No.	• Enter equipment/component number of affected item, if appropriate.
(10)	System/Bldg./Facility	• Enter appropriate system, building or facility number, if appropriate.
(11)	Receiver Remarks	• Enter special or additional comments concerning transmittal
(12)	Major Assm. Dwg. No.	• Enter applicable drawing number of major assembly, if appropriate.
(13)	Permit/Permit Application No.	• Enter applicable permit or permit application number, if appropriate.
(14)	Required Response Date	• Enter the date a response is required from individuals identified in Block 17 (Signature/Distribution)
(15)*	Data Transmitted	
	(A)* Item Number	• Enter sequential number, beginning with 1, of the information listed on EDT.
	(B)* Document/ Drawing No.	• Enter the unique identification number assigned to the document or drawing being transmitted.
	(C)* Sheet No.	• Enter the sheet number of the information being transmitted. If no sheet number, leave blank.
	(D)* Rev. No.	• Enter the revision number of the information being transmitted. If no revision number, leave blank
	(E) Title or Description of Data Transmitted	• Enter the title of the document or drawing or a brief description of the subject if no title is identified.
	(F) Impact Level	• Enter the appropriate Impact Level (Block 15). Use NA for non-engineering documents.
	(G) Reason for submittal	• Enter the appropriate code to identify the purpose of the data transmittal (see Block 16).
	(H) Originator Disposition	• Enter the appropriate disposition code (see Block 16).
	(I) Receiver Disposition	• Enter the appropriate disposition code (see Block 16)
(16)	Key	• Number codes used in completion of Blocks 15 (G), (H), and (I), and 17 (G), (H) (Signature/Distribution).
(17)	Signature/Distribution	
	(G) Reason	• Enter the code of the reason for transmittal (Block 16)
	(H) Disposition	• Enter the code for the disposition (Block 16).
	(J) Name	• Enter the signature of the individual completing the Disposition 17(H) and the Transmittal
	(L) Date	• Enter date signature is obtained.
	(M) MSIN	• Enter MSIN. Note: If Distribution Sheet is used, show entire distribution (including that indicated on Page 1 of the EDT) on the Distribution Sheet.
(18)	Signature of EDT Originator	• Enter the signature and date of the individual originating the EDT (entered prior to transmittal to Receiving Organization). If the EDT originator is the Cognizant/Project Engineer, sign both Blocks 17 and 18
(19)	Authorized Representative for Receiving Organization	• Enter the signature and date of the individual identified by the Receiving Organization as authorized to approve disposition of the EDT and acceptance of the data transmitted, as applicable
(20)*	Cognizant/Project Manager	• Enter the signature and date of the Cognizant/Project Engineer's manager. (This signature is authorization for release.)
(21)	DOE Approval	• Enter DOE approval (if required) by letter number and indicate DOE action

*Asterisk denote the required minimum items checked by Engineering Document Control prior to release; these are the minimum release requirements

SUPPORTING DOCUMENT

1. Total Pages 114

2. Title

Conceptual Design Report
Project W-058
Replacement of the Cross-Site Transfer

3. Number

WHC-SD-W058-CDR-001

4. Rev No.

0

5. Key Words

Project W-058
W-058
Cross-Site Transfer System

6. Author

Name: J. M. Light

J. M. Light
Signature

Organization/Charge Code W24370

7. Abstract

This is the conceptual design for the proposed cross-site transfer system to replace the existing cross-country transfer system.

8. PURPOSE AND USE OF DOCUMENT - This document was prepared for use within the U.S. Department of Energy and its contractors. It is to be used only to perform direct or integrate work under U.S. Department of Energy contracts. This document is not approved for public release until released.

PATENT STATUS - This document copy, since it is transmitted in advance of patent clearance, is made available in confidence solely for use in performance of work under contracts with the U.S. Department of Energy. This document is not to be published nor its contents otherwise disseminated or used for purposes other than specified above before patent approval for such release or use has been secured, upon request, from the U.S. Department of Energy, Patent Attorney, Richland Operations Office, Richland, WA.

DISCLAIMER - This report was prepared as an account of work sponsored by an agency of the United States Government. Neither the United States Government nor any agency thereof, nor any of their employees, nor any of their contractors, subcontractors or their employees, makes any warranty, express or implied, or assumes any legal liability or responsibility for the accuracy, completeness, or any third party's use or the results of such use of any information, apparatus, product, or process disclosed, or represents that its use would not infringe privately owned rights. Reference herein to any specific commercial product, process, or service by trade name, trademark, manufacturer, or otherwise, does not necessarily constitute or imply its endorsement, recommendation, or favoring by the United States Government or any agency thereof or its contractors or subcontractors. The views and opinions of authors expressed herein do not necessarily state or reflect those of the United States Government or any agency thereof.

9. Impact Level 3 | 1

10. Authorized Manager's Name

R. L. Fritz

R L Fritz 5-10-91
Authorized Manager's Signature

Specify Distribution Limit

Sponsor Limited

11. RELEASE STAMP

RELEASED
DISTRIBUTION LIMITS

- [ ] INTERNAL ONLY
- [x] 13 SPONSOR LIMITED
- [ ] EXTERNAL

DATE: MAY 10 1991
STA. 4

APPROVED FOR PUBLIC RELEASE
1-8-92

A-6400-073 (7/90) (EF) WEF124
Supporting Document (Cover Sheet)

WHC-SD-W058-CDR-001 Rev. 0

CONCEPTUAL DESIGN REPORT

REPLACEMENT OF THE CROSS-SITE TRANSFER SYSTEM

PROJECT W-058

Prepared for

Westinghouse Hanford Company

May 1991
(Issue H)

APPROVED FOR PUBLIC RELEASE
1-8-92

For the U.S. Department of Energy
Contract DE-AC06-87RL10900

Prepared by

Kaiser Engineers Hanford Company
Richland, Washington

W058CDR
ER1004

KAISER ENGINEERS
HANFORD

W058CDR
CONCEPTUAL DESIGN REPORT

FOR

REPLACEMENT OF THE CROSS-SITE TRANSFER SYSTEM

PROJECT W-058

Prepared by

Kaiser Engineers Hanford Company
Richland, Washington

for

Westinghouse Hanford Company

Principal Lead Engineer	3-15-91 Date	Technical Communications	3-12-91 Date
Safety	3-15-91 Date	Environmental	3-15-91 Date
N/A Chief Design Engineer	Date	Quality Engineering	3-15-91 Date
Project Manager	3/27/91 Date	ADC/UCM Review	3-15-91 Date

Westinghouse Hanford Company

Projects Department	3-27-91 Date

TABLE OF CONTENTS

I. INTRODUCTION 1

II. SUMMARY 1

III. JUSTIFICATION 3

IV. DESCRIPTION OF PROJECT SCOPE 3
- A. IMPROVEMENTS TO LAND (460) 3
- B. OTHER STRUCTURES (550) 5
- C. UTILITIES (600) 7
- D. SPECIAL EQUIPMENT/PROCESS SYSTEMS (700) 9

V. METHODS OF PERFORMANCE 16
- A. ONSITE ARCHITECT-ENGINEER WORK (WBS 1.1 and 1.2) 16
- B. PROCUREMENT STRATEGY (WBS 2.0) 16
- C. ONSITE CONSTRUCTION CONTRACTOR (WBS 3.1) 17
- D. OFFSITE CONSTRUCTION CONTRACTOR (WBS 3.2) 17
- E. OPERATING CONTRACTOR (WBS 3.3 and 3.4) 17

VI. REQUIREMENTS AND ASSESSMENTS 18
- A. SAFEGUARDS AND SECURITY 18
- B. HEALTH AND SAFETY 18
- C. DECONTAMINATION AND DECOMMISSIONING 19
- D. PROVISIONS FOR FALLOUT SHELTERS 20
- E. MAINTENANCE AND OPERATION REQUIREMENTS 20
- F. AUTOMATED DATA PROCESSING EQUIPMENT 20
- G. QUALITY ASSURANCE/SAFETY CLASSIFICATION 20
- H. ENVIRONMENTAL COMPLIANCE 22
- I. PERMITS 23

VII. IDENTIFICATION AND ANALYSIS OF UNCERTAINTIES 25

VIII. REFERENCES 29

APPENDICES
- Appendix A. Work Breakdown Structure
- Appendix B. BA/BO Schedule
- Appendix C. Cost Estimate Summary
- Appendix D. Conceptual Project Schedule
- Appendix E. Outline Specifications
- Appendix F. Energy Conservation Report and Analysis
- Appendix G. Preliminary Safety Evaluation
- Appendix H. Life Cycle Cost Analysis
- Appendix I. Instrumentation Identification
- Appendix J. Physically Handicapped Assessment
- Appendix K. Plant Forces Work Review
- Appendix L. Sketches

ACRONYMS

ACI	American Concrete Institute
AISC	American Institute of Steel Construction
ANSI	American National Standards Institute
ASME	American Society of Mechanical Engineers
ASTM	American Society of Testing and Materials
ATP	Acceptance Test Procedure
AWS	American Welding Society
CASS	Computer-Aided Surveillance System
CFR	Code of Federal Regulations
DOE	Department of Energy
DOH	Department of Health
EPA	Environmental Protection Agency
FDC	functional design criteria
FS	Federal Standards
FY	Fiscal Year
HPS	Hanford Plant Standard
HWVP	Hanford Waste Vitrification Plant
MCS	monitor and control system
MOV	motor-operated valve
MRP	Management Requirements and Procedures
MS	Military Standards
MUX	multiplexer
NFPA	National Fire Protection Association
PCI	Prestressed Concrete Institute
PLC	programmable logic controller
PSD	Prevention of Significant Deterioration
PVC	polyvinyl chloride
QAPP	Quality Assurance Program Plan
RCRA	Resource Conservation and Recovery Act
RL	Richland Operations Office
RLWF	Radioactive Liquid Waste Facilities
SDC	Standard Design Criteria
SST	single-shell tank

ACRONYMS (Continued)

UBC	Uniform Building Code
UCRL	University of California Lawrence Radiation Laboratory
WAC	Washington Administrative Code
WHC	Westinghouse Hanford Company
WSDOE	Washington State Department of Ecology
WSDOT	Washington State Department of Transportation

CONCEPTUAL DESIGN REPORT

REPLACEMENT OF THE CROSS-SITE TRANSFER SYSTEM

PROJECT W-058

I. INTRODUCTION

Liquid waste has been transferred between the 200-West Area and the 200-East Area facilities for approximately 30 yr. Recently, audit findings concluded that several segments of the transfer line do not comply with all U.S. Department of Energy (DOE) and other federal and state standards. Certain segments have exceeded, or are nearing the end of, their useful design life and one segment has no backup, which could lead to a long-term outage of the system should a failure occur.

Project W-058 will provide upgrades and modifications required for the system reliability and facility compliance to support the planned mission of the Cross-Site Transfer System. Specifically, changes will consist of a 6.5 mi, dual-line, pipe-in-pipe system connecting the 241-SY Tank Farm with the 244-A Lift Station.

The cost estimate summary and conceptual project schedule are in appendices C and D, respectively.

II. SUMMARY

This project provides two new parallel encased pipelines to connect the SY Tank Farm in the 200-West Area with the 200-East Area tank farms by way of its interface with the 244-A Lift Station. The new piping covers a distance of approximately 6.5 mi. This system will replace parts of the existing Cross-Site Transfer System which are nearing the end of their useful life and portions of which do not comply with all U. S. Department of Energy (DOE) and other

federal and state regulations. The function of the Cross-Site Transfer System is to provide for transfer of radioactive slurry wastes from the SY Tank Farm to the treatment, storage, and disposal facilities in the 200-East Area. This system is an important improvement for site cleanup.

In addition to the two 3-in. stainless steel lines, each of which is encased in a 6-in. carbon steel line, the following will also be provided:

- Three new diversion boxes and a high-point vent station to facilitate integration with existing facilities and also connections to future facilities such as the Hanford Waste Vitrification Project (HWVP).

- Three booster pumps to maintain critical fluid velocities to prevent solid waste settling and potential line blockage.

- Leak detection, instrumentation, and controls to permit safe operations.

- New access roads and fence enclosures.

- Electrical power extension from existing services.

The system will comply with DOE Order 6430.1A, Division 13, Section 1323 for Radioactive Liquid Waste Facilities (RLWF), Federal Resource Conservation and Recovery Act (RCRA) requirements, Code of Federal Regulations (CFR) 40 CFR 260-265, and State of Washington, Washington Administrative Code (WAC), WAC-173-303.

This project will not decommission existing transfer system components.

The total estimated cost of this project is $49,400,000.

III. JUSTIFICATION

The upgrades and modification provided by project W-058 are required to provide the system reliability and facility compliance to support the planned mission of the Cross-Site Transfer System. The key function is to support the transfer of wastes from the SY Tank Farm to the treatment, storage, and disposal facilities in the 200-East Area. The wastes associated with the SY Tank Farm include: 222-S Laboratory and decontamination and decommissioning waste, Plutonium Finishing Plant waste, west area single-shell tank (SST) waste, and decontamination and decommissioning clean-up wastestreams from various facilities such as T Plant and U Plant. The SY Tank Farm is planned to be the staging facility for cross-site transfers until Fiscal Year (FY) 2030.

Failure to implement project W-058 would put the above missions and functions at risk. This could lead to plant shutdowns, fines, and/or legal actions against the DOE and/or its contractors. Additionally, part of the Hanford Federal Facility Agreement and Consent Order (Tri-Party Agreement) (Ecology et al. 1989) regarding SST clean-out would be jeopardized should the Cross-Site Transfer System be shut down. Project W-058 supports the portions of the agreement that deal with tank cleanup. The cross-site transfer line will be the principal means of waste transfer.

IV. DESCRIPTION OF PROJECT SCOPE

A. IMPROVEMENTS TO LAND (460)

Replacement of the Cross-Site Transfer System will include the 600, 200-East, and 200-West Areas in the scope of work. Clearing and grubbing of the 6.5-mi pipe route, the areas for the vent station and the three diversion boxes, and new access roads to these facilities will be performed. No demolition or relocation of existing structures will be required as part of this project.

The proposed pipeline route crosses nine asphalt surfaced roads, two unpaved roads, two railroad spurs, the 24-in. export raw-water line supplying the 200-East Area, and five other sanitary/raw-water lines. Where the pipeline crosses an asphalt surfaced road, the asphalt will be cut and then repaired with hot-laid asphaltic concrete pavement and proper base materials. Where the pipeline crosses a railroad spur or a road, it will be encased in an additional steel pipe encasement as shown on sketch ES-058-M16 (all sketches are in appendix L).

Buried pipes will be spaced, bedded, and backfilled as shown on sketch ES-058-M16. Where the minimum earth cover is not attainable, earth berming will be required and will be performed as shown on sketch ES-058-M16.

All areas disturbed during construction will be graded and then stabilized. Areas around the diversion boxes and vent station will use gravel stabilization material. The ground surface above the pipe route will be treated with herbicide and stabilized. In radiation areas, gravel stabilization will be used. The areas around the diversion boxes and the vent station will be graded to a gradual slope away from them to provide for water runoff and drainage.

Access roads to the vent station and diversion boxes will be 18-ft wide single-lane roads with a 2-in. layer of base course material.

A 7-ft high chain-link fence with 3-strand barbed wire and a 12-ft wide double-swing gate will be installed around the three diversion boxes and the vent station. Each fenced area will be approximately 60- by 60-ft to provide a laydown area for cover blocks and equipment. Warning signs will be posted. They will read "Danger - Unauthorized Personnel Keep Out," or equivalent and be readable at 25 ft.

Guardposts will be provided around leak detection swab areas that are located near roadways. Swab areas are located approximately every 1,000 ft.

All earthwork will be performed in accordance with Washington State Department of Transportation (WSDOT) M41-10, Division 2.

B. OTHER STRUCTURES (550)

This project will require the construction of three diversion boxes and a vent station to provide system access and future tie-in points. These concrete structures will be designed to comply with the structural requirements specified in DOE Order 6430.1A and Hanford Plant Standard (HPS), Standard Design Criteria (SDC), SDC-4.1 for Safety Class 2 facilities. The structures will be designed for the following criteria:

- **Seismic Loads**

  University of California Lawrence Radiation Laboratory (UCRL), UCRL-15910, Section 4.2.3 requiring performance of dynamic analysis or equivalent static analysis.

- **Load Combinations**

  In accordance with American Concrete institute (ACI), ACI 349-85 for concrete structures.

All other support structures, such as equipment buildings, will be designed to comply with the requirements for Safety Class 3 facilities. These structures will be designed for the following criteria:

- **Seismic Loads**

  University of California Lawrence Radiation Laboratory, UCRL-15910, Section 4.2.2 for structures, Section 4.4.4 for systems and components.

- **Wind Loads**

  American National Standards Institute (ANSI) A58.1, basic wind speed of 70 mph, Importance factor of 1.07, and exposure category C.

- **Load Combinations**

  In accordance with Uniform Building Code (UBC), ACI 318, or American Institute of Steel Construction (AISC), AISC S326.

All structures, including Safety Classes 2 and 3, will also be designed for the following criteria:

- **Roof Loads**

  In accordance with ANSI A58.1, Section 4.

- **Snow Loads**

  In accordance with ANSI A58.1, Section 7, minimum of 20 psf.

A seismic analysis will also be performed for all electrical, mechanical, and instrumentation equipment and their supports in accordance with the previously listed criteria.

A soils analysis will be performed and a report prepared for design of the vent station and diversion boxes. Information to be included in this report will be allowable soil bearing capacity, lateral earth pressures, horizontal and vertical modulus of subgrade, and recommendations for dynamic earth pressures.

The sizes and configurations of the diversion boxes and vent station will be as shown on the attached engineering sketches. They will be equipped with stainless steel liners to protect against chemical and radiological contamination.

The lids for the vent station and diversion boxes will be precast, reinforced concrete and will be designed and sealed to prevent the release of contamination to the environment and to provide weather protection (rain, snow, and dust). The vent station and diversion box structures will also be provided with access ladders and removable handrails.

The instrumentation and electrical equipment walk-in enclosures next to the vent station and diversion boxes No. 1 and 2 will be located on 8-in. thick 15- by 15-ft reinforced concrete pads.

C. UTILITIES (600)

1. Electrical

All electrical work and material will be provided in accordance with National Fire Protection Association (NFPA), NFPA 70-1990, National Electrical Code, National Electric Safety Code, ANSI C2-1990, applicable Hanford Plant Standards and DOE Order 6430.1A.

The electrical power required to operate the motor-operated valves (MOVs) and instrumentation in valve pits 241-SY-A and 241-SY-B will be provided by a new 120/240 V, 100 A frame, single-phase, 20-circuit panelboard, with main lugs only in a NEMA 4X enclosure. The panelboard will be mounted on a channel fabricated equipment rack located near the valve pits. Also mounted on the equipment rack will be a 240 V, 100 A, 2-pole, 3-wire main disconnect switch and an instrumentation enclosure. Power to the main disconnect will be provided by installing a new 30 A, 2-pole breaker in existing panelboard B, in the 241-SY-271 Building, and routing via a direct buried 2-in. polyvinyl chloride (PVC)-coated rigid conduit with three No. 6 AWG, phase conductors and one No. 8 ground conductor (approximately 200 ft).

The 480 Vac, 400 A, 3-phase power required by the booster pump supplier at diversion box No. 1 and the vent station will be provided by extending the existing 13.8 kV, 3-phase, pole lines approximately 1,500 ft (see sketch ES-058-N1) to the required sites. At each site, three single-phase, 13.8 kV-277 V 167 kVA transformers, will be pole mounted to feed a 600 V, 400 A, 3-pole, 4-wire main disconnect switch via two direct buried 3 in. PVC-coated rigid conduits with four No. 250 KCMI conductors, and one No. 2 ground conductor in each conduit (approximately 50 ft). The disconnect will be mounted on a channel-fabricated equipment rack and will feed the pump supplier's new walk-in equipment enclosure.

The 480 Vac, 400 A, 3-phase, power required by the booster pump supplier at diversion box No. 2 will be provided by pole mounting three single-phase, 13.8 kV-277 V, 167 kVA transformers (see sketch ES-058-N1). A 600 V, 400 A, 3-pole, 4-wire main disconnect switch will be mounted on a channel fabricated equipment rack near the diversion box. The source will be direct-buried and consist of two 3-in. PVC-coated rigid conduits with four No. 250 KCMI conductors and one No. 2 ground conductor in each conduit.

Metering at each booster pump location will be provided in accordance with DOE Order 6430.1A, Division 13.

Diversion Box No. 3 and the 244-A Lift Station power requirements will be provided by extending branch circuits from the existing panelboard "A" located in the 244-A Building.

2. **Cathodic Protection**

An impressed current cathodic protection system will be provided for all new underground carbon-steel encasement piping. This system will include: (1) a cathodic protection system rectifier, located near

the vent station (480 Vac, 3-phase, 20 A service will be extended from pump supplier's walk-in equipment enclosure), (2) test stations, mounted flush with grade, spaced not more than 1,000 ft apart along the underground pipe lines, (3) vertically installed anodes spaced not more than 50 ft apart along the underground pipelines, (4) anode junction boxes mounted flush with grade, spaced not more than 1,000 ft apart along the underground pipelines, and (5) anode header cables and anode loop cables. Concrete cable markers will be used to mark the location of direct buried cathodic protection cables. Existing underground piping exposed during excavation will be monitored for voltage level but will not be cathodically protected. The cathodic protection system will be compatible with existing cathodic protection systems in adjacent areas.

D. SPECIAL EQUIPMENT/PROCESS SYSTEMS (700)

1. Instrumentation

The following instrumentation, in conjunction with that of transfer related tank farm facilities and approved administrative procedures, will provide the means for safe operation of the Cross-Site Transfer System. Where practical, the design approach follows that of projects W-028 and W-087. Instrumentation design and procurement will be to Safety Class 3 requirements. The design is implemented as shown on figure 1 and sketches ES-058-M10, ES-058-M11, and ES-058-M12 (appendix L), and Table 1, Instrumentation Identification (appendix I).

Leak detection (using a thermal dispersion type sensor) will be located at the low point of each transfer line encasement segment, at each diversion box drain or sump, and at the vent station sump. An in-route leak signal will automatically initiate a safe transfer specific shutdown of the Cross-Site Transfer System. To facilitate

leak location, test risers will be provided as discussed in Section IV, D.2. Although no instrumentation is provided for these risers, the design allows for the addition of leak detection elements. Other instrumentation provided include combustion analyzers for hydrogen detection, that will be intrinsically safe and qualified.[1] Also included are a quantitative level measurement system on the vent station catch tank (suitable for transfer mass balance determinations), vent pressure and flow event monitors for the vent station catch tank, an area radiation monitor for the vent station, and high-/low-temperature alarms for enclosures that house temperature sensitive instrumentation. Although not shown in detail, the instrumentation package provided with the three booster pumps (see Section IV, D.3) will consist of an operator console for pump remote control in the 242-S control room, local operator stations within habitable (manned) structures, pump related instrumentation, and dedicated space within the pump package equipment enclosure for rack mounting, by others, of nonpump instrumentation.

Except as noted below, existing tank farm instrumentation previously associated with cross-site transfer will be used as found. This instrumentation is associated with flush water supplied through the SY service pit and the waste stream supplied from tank 102-SY. This is used to control and/or monitor process temperature, pressure, flow, quantity, and radiation. The measurement range of the existing flow meter must be changed to accommodate the new 140 gpm design flow (the existing meter range is 100 gpm).

As shown in figure 1, four independent multiplexed data systems provide for the communication of instrumentation and control signals among the widely separated transfer system elements. One is

---

[1] The hydrogen analyzers have been included pending resolution of item 7.2 of ref 5.

provided by the booster pump package. The arrangement provides for control of 200-West to 200-East transfers from the 242-S control room, for collection of all transfer line signals at the 242-S control room, and for bringing new 200-East transfer signals up to the 242-A monitor and control system (MCS). An additional multiplexer (MUX) channel might be required to support the future tie-in of B Plant and HWVP and would be provided by whatever project required it. To augment 242-A and 242-S control, the design also provides for the local control of selected functions along the transfer line (see appendix I).

A new 242-S programmable logic controller (PLC), the existing 242-A Evaporator MCS, and existing A Farm hardwired interlocks provide the opportunity to integrate selected transfer signals, both new and existing, in the formulation of safe shutdown scripts, safety interlocks and alarms (cf ref 1 and appendix E). For PLC and MCS software see Section V, F. The conceptual design provides for the tie-in of five hardwired master shutdown interlocks from the 200-East tank farms (in 242-A) and the 242-S PLC. The definitive design schedule calls for the operating contractor to define the functional characteristics of transfers originating in 200 East and of transfer destinations east of 244-A.

Computer-Aided Surveillance System (CASS) inputs from the transfer system will be made to the 241-S CASS substation from the 242-S Building, which currently has sufficient spare capacity to implement the interface. The inputs will be taken from annunciator drops where there is logical equivalence, otherwise they will be derived from the PLC. A new annunciator will be added to the 242-S control room. Since existing annunciators G1 and G2 do not have sufficient spare alarms, approximately 40 new alarms will be required to resolve alarms by location, subsystem (booster pump and all other), and by type (failure, level, box leak, encasement leak,

pressure, flow, temperature, radiation, and hydrogen). Signal cable within tank farm areas will be protected by PVC-coated rigid conduit. Signal cable outside the tank farm areas will be either direct buried (with a spare cable) or aerial as shown on figure 2.

2. **Piping**

A new piping system will be installed between the 200-West Area (241-SY Tank Farm) and the 200-East Area (244-A Lift Station). The piping system will be two parallel 3-in. stainless steel lines each of which is encased in a 6-in. carbon steel line. The 6-in. encasement piping will be provided with 2-in. valved risers (swab points) approximately every 1,000 ft to facilitate leak detection and location. The system spans approximately 6.5 mi and includes three new diversion boxes and a high-point vent station. The new diversion boxes provide capability to connect future pipelines from the 200-East Area, B Plant, and the HWVP. Each diversion box will include spare connections for future pipelines. Each box will have a connection for a portable spray system (not provided by this project) to perform washdowns. The spray piping and nozzles are included in the box design. Also included in the box design is a piping connection for a portable exhaust system (also not provided by this project) to ventilate the box during cover block removal. The boxes are normally sealed to prevent leakage in or out. The high-point vent station incorporates the same features as the diversion boxes except for the following. A catch tank and pump is provided as well as a low-point sump and sump pump. The sump and sump pump are provided in lieu of a drain system. The sump pump will pump liquid from the sump to the catch tank. The catch tank will retain any liquid carryover from venting or pumped from the sump from washdowns or leaks. Liquid in the catch tank will then be pumped back to the tank farms via the transfer piping. The primary

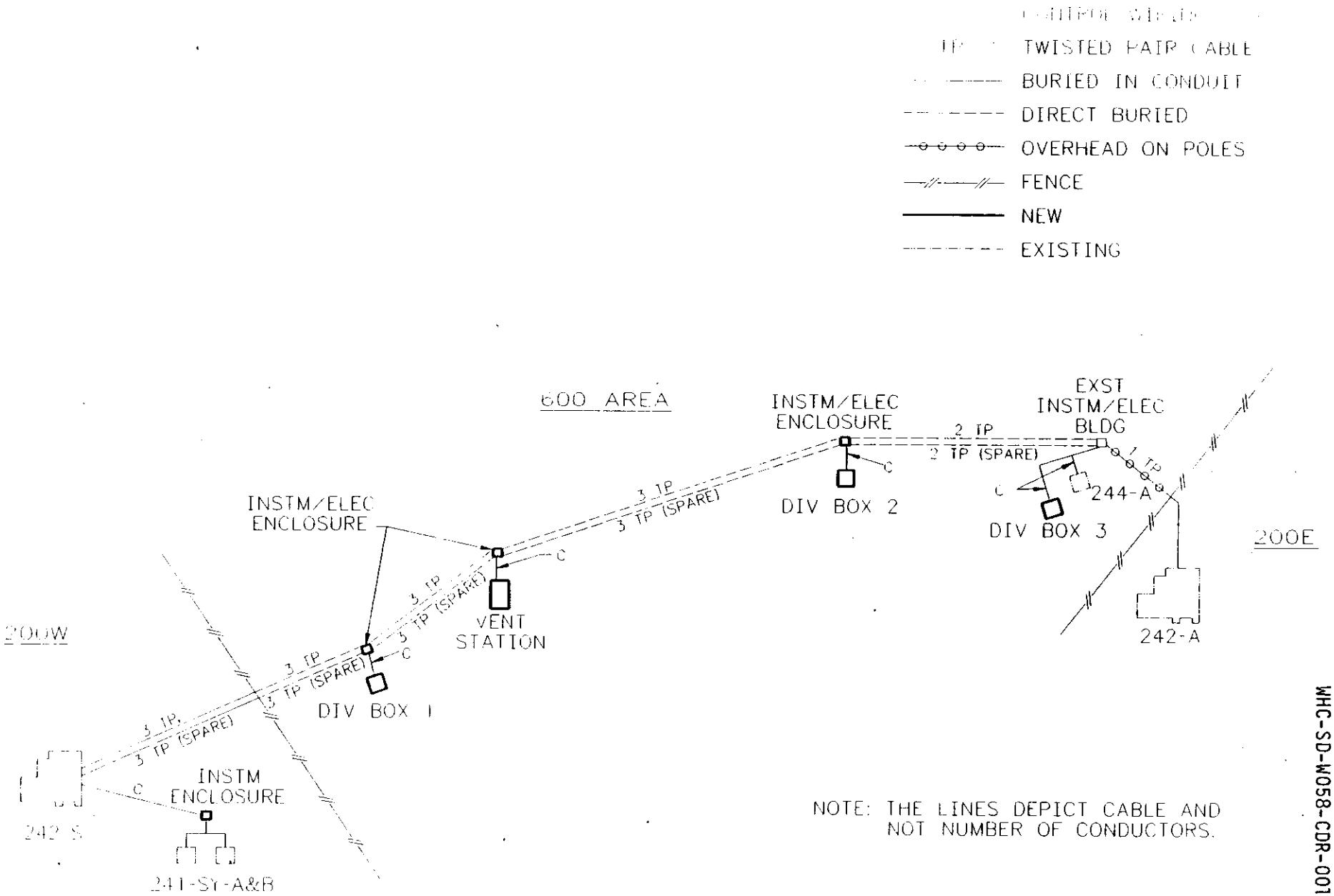

FIGURE 2

INSTUMENTATION CONTROL WIRING

SCALE: NONE

transfer piping is vented at the vent station to permit hydrotesting and to facilitate draining. The piping is vented to the catch tank which in-turn will be vented back to one of the following: the SY Tank Farms; the AY/AZ Tank Farm; or the Project W-030 Tank Farm Ventilation Upgrade. The vent line is a 3-in. carbon steel line encased in a 6-in. carbon steel line.

The new encased transfer piping and vent line will be buried a minimum of 36 in. below grade for freeze protection and shielding requirements. The encasements will be insulated for heat loss and cathodically protected for corrosion. Both the primary and encasement piping will be designed in accordance with American Society of Mechanical Engineers (ASME), ASME B31.3 for normal service with a design life of 35 yr. The design pressure will be 600 psig; the design temperature will be 0°F to 200°F or in accordance with the temperature range in the latest version of the FDC. The transfer piping and encasements are classified as Safety Class 2 and will use the applicable design loadings as outlined in SDC-4.1, Rev. 11. All of the piping will be sloped a minimum of 0.25% to facilitate draining and avoid trapping of liquids.

At the diversion boxes and vent station, the piping and valving will be in the form of removable pipe jumpers. The use of jumpers will facilitate equipment removal and piping configuration changes.

Due to the length of piping, three booster pumps will be provided to assist in process transfer. One pump will be located in diversion box No. 1, the second pump will be located at the vent station and the third at diversion box No. 2. The pumps are designed to assist in a process transfer of liquid waste from 200 West to 200 East and

maintain the minimum required fluid velocity (6 ft/sec) to avoid deposition of solids. The fluid properties designed for are:

Specific Gravity	1.0 to 1.3
Viscosity	1.0 to 15.0 centipoise
Solid Content	0.0 to 30.0% volume
Particle Size	10.0 to 60.0 micron
PH	11.0 to 14.0 transfer fluid
	7.0 to 14.0 flush water

To minimize the required number of booster pumps, the system design pressure was set at 600 psig (see Section VII, Identification and Analysis of Uncertainties). This is the maximum design pressure of a standard 2-in. jumper head as determined on another project, B-534. It is assumed that a 3-in. jumper head can also be verified for a 600 psig design pressure.

An optional jumper bypass will be provided around the booster pumps for east to west liquid transfers or for dilute waste transfers.

The piping system will comply with DOE Order 6430.1A, Division 13, Section 1323 for Radioactive Liquid Waste Facilities (RLWF).

The new piping and equipment is shown on sketches ES-058-M10 through ES-058-M19.

3. <u>Booster Pumps</u>

Three booster pump packages are provided to assist in process transfers. Each package is an integrated and engineered system which includes the following:

- High head, low flow, vertical turbine-type pump.

- Explosion proof, variable speed, electric motor.
- Complete instrumentation and control package.
- Building to house electrical and instrumentation.
- Heat pump system for heating and cooling of the building and diversion box/vent station.

The pumps will be procured to meet Safety Class 2 requirements. The instrumentation/electrical portion and the building will meet Safety Class 3 requirements because operation of the pumps is not critical to safety, but containment of the liquid is.

V. METHODS OF PERFORMANCE

A. ONSITE ARCHITECT-ENGINEER WORK (WBS 1.1 and 1.2)

The onsite engineer/constructor contractor will perform the definitive design, engineering during construction, and acceptance inspection and project management support as necessary on this project. Offsite expertise will be contracted to review the transfer piping design concept, detail design, and to provide stress analysis verification.

B. PROCUREMENT STRATEGY (WBS 2.0)

The onsite engineer/constructor contractor will procure the transfer system booster pumps packages (3). A procurement package will be prepared early in definitive design to allow the procurement process to proceed to achieve early pump delivery to prevent delays in the construction. The pump procurement package will include 1) three high-head, variable speed turbine pumps, 2) associated pump control systems for local and remote control, 3) three buildings to house the controls, 4) the services of a pump manufacturer's technical representative to supervise pump installation.

5) The pump manufacturer will provide the Acceptance Test Procedure (ATP) and technical representative to supervise the performance of the ATP. The onsite engineer/constructor contractor will procure shop fabrication service to fabricate and deliver the double encased transfer piping to be installed by the onsite construction contractor.

The onsite engineer/constructor will procure the vent station sump pump and the vent station catch tank/pump combination.

C. **ONSITE CONSTRUCTION CONTRACTOR (WBS 3.1)**

The onsite engineer/constructor contractor will be responsible for all new construction and interconnection with existing facilities from the 241-SY Tank Farm inside the 200-West Area to and including diversion box No. 1 and from the 244-A lift station to and including diversion box No. 2. All jumper fabrication will be performed by the onsite construction contractor as well as procurement of engineered equipment, acceptance/inspection services, safety services, ATP services on completed systems, and turnover services.

D. **OFFSITE CONSTRUCTION CONTRACTOR (WBS 3.2)**

An offsite construction contractor will be responsible for construction of the transfer system and associated facilities from diversion box No. 1 to diversion box No. 2. The offsite contractor will install the booster pumps in diversion boxes No. 1 and 2 and at the high point vent station. The onsite engineer/constructor contractor will manage and administer the fixed-price contract work.

E. **OPERATING CONTRACTOR (WBS 3.3 and 3.4)**

The operating contractor will provide the 242-A MCS software required to interface with the Cross-Site Transfer System and the software for the new 242-S PLC. The operating contractor will provide overall project management during design, procurement, and construction on this project.

The operating contractor will provide:

- Medium voltage tie-ins
- Initial decontamination of existing tie-in diversion boxes

VI. REQUIREMENTS AND ASSESSMENTS

A. SAFEGUARDS AND SECURITY

Parts of this project are within the 200-East and 200-West Limited Security Area potentially requiring security clearance or security escorts. A safeguards and security plan will be provided in accordance with Westinghouse Hanford Company (WHC) procedures. This plan will be in effect at the time of construction.

Each of the diversion boxes and the vent station will have a perimeter fence to control access during the life of the project.

The valves on the test risers will be locked and administratively controlled to control access.

B. HEALTH AND SAFETY

During the construction period, construction contractors will be required to take all reasonable precautions in their work to protect the health and safety of their employees, subcontractors, operation contractor, and DOE personnel.

All excavation work will be performed in accordance with the Washington Industrial Safety and Health Act Construction Code, WAC-296-155, Part N.

The constructor will provide an advance schedule to patrol and to the fire department. In addition, at least a 24-hr advance notification of any excavation work disrupting any roadway or other service will be required.

Risks associated with construction activities are to be considered and mitigated to the extent practical. In this regard, applicable DOE standards and regulations will be complied with during construction to minimize these risks. A primary hazard is the risk of radioactive contamination and exposure associated with the disposal of radioactive contaminated soil from the pipe trench excavation, core drilling, and exposure from existing waste transfer facilities that are tied into or exposed by project excavation. The appropriate safety standards and procedures for removing, packaging, and disposing of contaminated soil and materials will be followed.

A removable handrail will be provided around the perimeter of each diversion box and the vent station to prevent traffic across the boxes and to protect personnel when the cover blocks are removed.

Earth covers placed over the waste lines and the diversion box and vent station cover blocks will be designed to ensure that radiation dose rates at grade level will not exceed 0.5 mR/hr.

C. DECONTAMINATION AND DECOMMISSIONING

All surfaces are assumed to be subject to radioactive contamination, and except for nozzles, instrumentation, and stainless steel, will be painted with a special protective coating to allow for ease of decontamination. The diversion box/vent station design will provide spray piping and nozzles for decontamination capability by hookup of a portable spray system (not provided by this project). Spare nozzle penetrations and nozzle blanks will be incorporated into the design for future pipeline connections. Decontamination and decommissioning of existing equipment is not planned. Decontamination of the tie-in points at 241-SY valve boxes and 244-A catch tank is planned and will be performed by Plant Forces.

D. PROVISIONS FOR FALLOUT SHELTERS

There will be no provisions for fallout shelters as part of this project.

E. MAINTENANCE AND OPERATION REQUIREMENTS

All new facilities will be designed to facilitate access for maintenance. All equipment and instruments will be designed to operate in the environment in which they are located, and be maintained with standard tools wherever practical. If special tools are required, the tools and instructions for use will be purchased with the equipment.

Maintenance access to the diversion boxes and vent station will be provided to accommodate a crane and a 60-ft trailer (outside fenced area). Space for stacking cover blocks and the removable guardrail during maintenance will be provided (inside fenced area).

Equipment installed by this project is estimated to require about 2,000 maintenance manhours/yr. Existing testing equipment includes cathodic protection test equipment, primary and encasement piping pressure test equipment, leak detector test equipment, combustion analyzers test and calibration equipment.

Additional operations personnel may be required to monitor the new booster pumps during transfers.

F. AUTOMATED DATA PROCESSING EQUIPMENT

No new automated data processing equipment is required for this project.

G. QUALITY ASSURANCE/SAFETY CLASSIFICATION

1. Quality Assurance Activities

Project activities for all contractors involved in design, procurement, construction, and acceptance will be governed, as applicable, by the requirements of ANSI/ASME NQA-1 as directed by DOE-Richland

Operations (RL) Order RL 5700.1A, "Quality Assurance." Minimum project quality attributes will be included in the project functional design criteria (FDC) and project specific Quality Assurance Program Plan (QAPP). The QAPP will indicate the project critical characteristics, corresponding safety classification assignments, and programmatic criteria, as applicable. Additional requirements may be added by appropriate controlling documents. The specific technical and quality programmatic requirements, material certifications, qualification/certification of personnel, inspections, examinations/testing, and applicable quality assurance records will be established during definitive design and included in design documents.

Project W-058 will be designed as a special facility in accordance with DOE Order 6430.1A, Division 13. The facility type has been determined to meet applicable special facility Section 1323, Radioactive Liquid Waste Facilities. The project has been assigned a preliminary "hazard classification" of moderate.

2. **Safety Classification**

Safety classification of systems, components, and structures are used as the basis for Hanford Quality Assurance requirements as defined in WHC Management Requirements and Procedures (MRP) Manual WHC-CM-1-3, Safety Classification of Systems, Components, and Structures, Section MRP 5.46.

Safety classifications are identified for those items important to safety or environmental protection so that appropriate efforts will be placed on design, procurement, construction, testing, operation, maintenance, and modifications.

Safety classifications are determined through analysis and consequence of failure established in the project FDC and/or safety

analysis documents. Safety Class 2 is the highest level applied to any (anticipated for any) elements of the proposed facility.

A Safety Class Matrix can be found in the Preliminary Safety Evaluation (ref 5).

H. ENVIRONMENTAL COMPLIANCE

The cross-site transfer line will transport materials defined as dangerous by WAC-173-303-090 and 40 CFR 261, Subpart C. Therefore, it will comply with the following environmental regulations and DOE Orders:

- Washington Administrative Code, WAC-173-303-640.
- 40 CFR 61, Subpart H.
- 40 CFR 264, Subpart J.
- Department of Energy Orders 4700.1, 5400.1, 5400.3, 5480.4, 5820.2A, and 6430.1A.
- Department of Energy-Richland Operations Order RL 5480.4.

Washington Administrative Code, WAC-173-303-640(4) requires the use of a pipe-in-pipe secondary containment system throughout the project. To meet these requirements, a leak detection and removal system with the following features has been proposed:

- Low-point moisture detectors.
- Test risers at 1,000 ft intervals, with a configuration allowing for the installation of additional leak detection elements if required by the Washington State Department of Ecology (WSDOE).

- Pressure connectors, to allow pressure testing of the primary and/or secondary pipes following batch transfers, if necessary. These connectors will be of sufficient size to allow flushing the annular space.

- Low-point drains.

Administrative controls utilized in conjunction with the above listed design features will provide the ability for compliance with WAC-173-303-640(4)(c) iii.

I. PERMITS

The required permits to construct/operate the project are addressed in the following paragraphs.

1. Solid Waste Regulations

The upgrades of this project will be permitted for operation under the existing Double-Shell Tank System Dangerous Waste Permit application through the use of the permit modification process.

2. Air Emission Regulations

Submittals under the Clean Air Act of 1977 may be required. Submittals would be required if there is a new source or an increase in emissions from an existing source. The conceptual design of this project routes vented air back into the system, not to the atmosphere. At definitive design, it will be determined exactly where the ventline will terminate. If the system vents back to the double-shell tanks, there would be no new point source and probably no increase in emissions. In this case, a new permit would not be required. A notification to the Washington State Department of Health (DOH) would be required for any anticipated increase in air flow or released materials. If, however, venting is to another facility, there would be a potential increase in emissions at that

facility. If it can be determined that there will be an increase and the 40 CFR 61, Appendix D dose is greater than .1 mrem/yr to the maximally exposed offsite individual, isokinetic sampling would be required at the release point. If the facility has not been permitted, a permit would be required due to added source inventory of the transfers. Further information is needed about the design prior to determining if the venting of the cross-site transfer line to the SY tanks or to other existing facilities would constitute an increase in emissions.

Time Requirements

Prevention of Significant Deterioration (PSD) Permits from WSDOE are generally estimated to take 70 weeks, Radioactive Air Emissions Program permits from DOH are estimated to take 64 weeks, as are National Emission Standards for Hazardous Air Pollutants permits from the EPA. Construction, including long-lead procurement, is not to proceed without all required permits.

Permitting Strategy

The information generally needed for a permit application includes the emissions expected from the facility, the abatement equipment that will be in place, the type of sampling equipment that will be used, and any other monitoring or abatement equipment. It may be necessary to expedite definitive design of the ventilation system of the project to support permit application and desired construction date.

3. <u>Liquid Discharge Regulations</u>

Liquid is not being discharged; therefore, no liquid discharge regulations apply.

VII. IDENTIFICATION AND ANALYSIS OF UNCERTAINTIES

BOOSTER PUMPS

The number and size of booster pumps is based on a 600 psig design pressure. This maximum design pressure is based on a study done for project B-534. The results of which showed that a 2-in. jumper head was good for a 600 psig design pressure and a 900 psig test pressure.

Additional analysis and testing will be required to verify a 3-in. jumper connector head for a design pressure of 600 psig. Another option to be investigated would be a different connector head design or commercially available connectors rated for 600 psig that could be used or adapted for use.

In addition, the existing transfer piping in the 200-East Area has not been identified or verified for compatibility with the proposed design pressure. Pressure regulating equipment may be required to protect existing interfacing piping systems.

Per WHC, if it were necessary to lower the design pressure, the FDC would be revised to change the fluid properties for pumping by further dilution.

JUMPERS

The jumpers have been classified as Safety Class 2. This will require qualifying the jumpers for seismic loading. Because this has not been previously done; the outcome is unknown and could result in considerable design modification not presently anticipated. Additional contingency has been provided.

HIGH POINT VENTING

The design will vent the transfer piping to one of the following locations:

- SY Tanks

- AY/AZ Tanks
- Project W-030, Tank Farm Ventilation Upgrade

During definitive design, evaluations will be performed to determine the most suitable location.

PIPING

The new buried encasement pipe is Safety Class 2 which may cause analytical complications in trying to comply with SDC-4.1, Rev. 11. Standard Design Criteria, SDC-4.1, requires a dynamic analysis.

A dynamic analysis is not considered practical for buried lines.

The past methodology and the one intended to be used for this project is based on Newmark's investigations and published by the ASME Pressure Vessel Section which is a hand calculation method.

If the intended methodology is changed in the future, there is a potential effect to the design costs. It is assumed that the baseline engineering contingency will accommodate this.

The design of the piping system does not comply with all items outlined in the FDC and referenced document, WHC-CM-4-9, Rev. 0, "Radiological Design." There are several criteria which are not considered applicable to this project, such as:

a. Cleanout connections, sized to match the pipe will be provided at 90° pipe corners of all underground primary piping for use in flushing and cleaning operations.

b. Valves and valve pits will be provided at 90° pipe corners of all underground piping for use in flushing and cleaning operations.

c. Piping which is gravity drained will be installed with a slope which results in a liquid velocity of at least 2 ft/s at the average rate of flow.

It is assumed that a waiver for the nonrelated sections will be issued against this document at the initiation of definitive design.

NEPA PERMITS

When the vent line terminus is decided, it will be determined if there are increases in point source emissions that would require NEPA permitting under the Clean Air Act.

LEAK DETECTION SYSTEM

The leak detection system outlined in Section VI.H has been proposed for compliance with WAC-173-303-640 leak detection and removal requirements. As discussed previously, this system allows for the addition of leak detection elements to the test risers, and for pressure testing the primary and/or containment piping. These capabilities are provided as contingencies; the configuration of the leak detection system may change during the permit application and approval process. The extent of these changes and their impact on cost and schedule cannot be evaluated further without dialogue with the WSDOE. The budget contingency will reflect these uncertainties.

CIVIL/STRUCTURAL

The conceptual design report effort did not develop detail plan and profile drawings necessary to accurately define the quality of excavation, backfilling, and berming material quantities required to install cross-site transfer lines. The cost estimate for this earthwork does not have a high-confidence level and has contingency applied accordingly.

The proposed cross-site line routing passes through areas of potentially contaminated soil. Existing survey records have identified much of the contaminated soil. A radiation survey will be performed on the proposed cross-site line routing prior to beginning definitive design. The results of this survey

could result in pipe line rerouting to minimize the cost and schedule impacts of handling and disposing of contaminated soil.

As stated in the project scope section, the proposed pipeline routing crosses six buried water lines, either sanitary or raw. This situation would also require additional study to determine the status of the existing lines and their locations relative to the new waste transfer (cross-site) piping. Where waste lines must cross water supply lines, the effects of a water-line break or rupture on the soil support available for the cross-site transfer lines will be evaluated. If necessary, the water lines will be encased.

Penetration locations for new piping connecting to existing structures would need to be mapped and scanned to avoid the cutting of rebar during coredrilling.

The following safety-related products will be obtained from qualified suppliers meeting appropriate NQA-1 program requirements or be Commercial Grade Items meeting specific testing criteria. Acceptance testing of Commercial Grade Items will be performed by testing agencies having quality assurance programs meeting the requirements of ANSI NQA-1.

- Concrete for diversion boxes and vent station.
- Reinforcing for diversion boxes and vent station.
- Structural steel shapes and plate used within diversion boxes and vent station.
- Stainless steel liner in diversion boxes and vent station.

VIII. REFERENCES

DOCUMENTS

1. Functional Design Criteria, "Replacement of the Cross-Site Transfer System," Rev. 0, Project W-058, prepared by Westinghouse Hanford Company, February 1991.

2. "Safety Analysis Report for Saltwell Waste Receiver Facilities," Project W-058, Document No. SD-WM-SAR-032, Rev. 0.

3. "Operational Safety Requirements," Project W-058, Document No. SD-WM-SAR-016, Rev. 1.

4. "Limiting Condition of Operations," Project W-058, Document No. SD-HS-SAR-018, Rev. 0A.

5. "Preliminary Safety Evaluation for Project W-058," Document No. WHC-SD-W058-PSE-001, Rev. 0.

6. "Dangerous Waste Regulations, Tank Systems," Document No. WAC-173-303-640.

DRAWINGS

H-2-71085, sh 1, rev 8	H-2-71086, sh 1, rev 5	H-2-71091, sh 1, rev 6; sh 2, rev 3
H-2-37700, sh 1, rev 4	H-2-37716, sh 1, rev 2	H-2-37732, sh 1, rev. 4
H-2-37734, sh 1, rev 7	H-2-37735, sh 1, rev 4; sh 2, rev 3	H-2-37757, sh 1, rev 5; sh 2, rev 8
H-2-37758, sh 1, rev 5	H-2-37762, sh 1, rev 2	H-2-37764, sh 1, rev 2; sh 2, rev 1
H-2-37766, sh 1, rev 2	H-2-37768, sh 1, rev 5	H-2-37770, sh 1, rev 5
H-2-37770, sh 1, rev 4	H-2-37793, sh 1, rev 4	H-2-37809, sh 1, rev 1

H-2-46147, sh 1, rev 3	H-2-37325, sh 1, rev 1	H-2-37758, sh 2, rev 1
H-2-76532, sh 1, rev 3	H-2-76549, sh 1, rev 1	H-2-71083, sh 1, rev 1
H-2-71618, sh 1, rev 2	H-2-37847, sh 1, rev 2	H-2-46303, sh 1, rev 6
H-2-46306, sh 1, rev 4	H-2-46433, sh 1, rev 4	H-2-46789, sh 1, rev 2
H-2-46790, sh 1, rev 3	H-2-76550, sh 1, rev 1	H-2-76555, sh 1, rev 1
H-2-93766, sh 1, rev 1	H-2-93767, sh 1, rev 1; sh 2, rev 1	H-2-93785, sh 1, rev 1
H-2-43158 , sh 1, rev 1	H-2-38940, sh 1, rev 2	H-2-68274, sh 1, rev 1
H-2-76553, sh 1, rev 1	H-2-76554, sh 1, rev 1	H-2-38372, sh 1, rev 2
H-2-71612, sh 1, rev 1	H-2-38200, sh 1, rev 1	H-2-38211, sh 1, rev 3
H-2-38217, sh 1, rev 5	H-2-38219, sh 1, rev 2	H-2-38222, sh 1, rev 1
H-2-38225, sh 1, rev 1	H-2-38206, sh 1, rev 1	H-2-38210, sh 1, rev 3
H-2-38218, sh 1, rev 1	H-2-38209, sh 1, rev 3	H-2-38220, sh 1, rev 1
H-2-71609, sh 1, rev 1	H-2-71611, sh 1, rev 1	H-2-38939, sh 1, rev 3
H-2-71610, sh 1, rev 1	H-2-71784, sh 1, rev 6; sh 2, rev 3; sh 3, rev 7; sh 4, rev 4	H-2-71616, sh 1, rev 2
H-02-71787, sh 1, rev 1; sh 2, rev 0	SK-2-44500, sh 1, rev 1	H-2-71600, sh 1, rev 1
H-2-34965, sh 1, rev 18	H-2-76531, sh 1, rev 1	H-2-46973, sh 7
H-2-43055	H-2-37781	H-2-2904
H-2-43056	H-2-37794	H-2-3993
H-2-43061	H-2-37798	H-2-36649
H-2-43153	H-2-37801	H-2-37968
H-2-43163	H-2-37809	H-2-38200
H-2-43074, sh 1-4	H-2-38939	H-2-38201
H-2-44500, sh 1-7	H-2-38940	H-2-38202, Sh 1-3
H-6-10100	H-2-39551	H-2-38203
H-6-10105	H-2-39553	H-2-38222
H-6-10106	H-2-43028	H-2-38223
H-6-10120	H-2-43057	H-2-38224
H-6-10121	H-2-44510, sh 9	H-2-38225
H-11-4327	H-2-44511, sh 45	H-2-38228

M-6000, sh 2
M-2600, sh 23, 24, 27, 28
H-2-46267
H-2-46269
H-2-46277
H-2-46532
H-2-5775
H-2-6000, sh 2
H-2-68503, sh 1, 2
H-2-71639
H-2-76532
H-2-76536, sh 1, 2
H-2-76537, sh 1, 2
H-2-76538
H-2-76539
H-2-76553
H-2-91866
H-2-2467, sh 16, rev 0
H-2-2467, sh 14, rev 0
H-2-44512, sh 32
H-2-46111
H-2-38232
H-2-43031
H-2-43036
H-2-43042
H-2-43043
H-2-43045
H-2-43049
H-2-43050
H-2-43051
H-2-43052
H-2-43053
H-2-43054
H-2-76541
H-2-76614
H-2-93766
H-2-2460, sh 10, rev 10
H-2-37734, sh 1, rev 8
H-2-38229
H-2-38231
H-2-2469, sh 1-3
H-2-3411
H-2-31321
H-2-31322
H-2-35857
H-2-35859
H-2-35860
H-2-37316
H-2-37701
H-2-37768
H-2-37778, sh 1, 2
H-2-37780
H-2-76542
H-2-81359, sh 2
H-2-2467, sh 11, rev 9
H-2-2522, sh 1, rev 6

APPENDIX A

Work Breakdown Structure

WORK BREAKDOWN STRUCTURE

1.0 ENGINEERING

- 1.1 Definitive Design
  - 1.1.1 Definitive Design (Onsite Architect-Engineer)
  - 1.1.2 Offsite Design Peer Review
- 1.2 Engineering and Inspection during construction (Onsite Architect-Engineer)

2.0 PROCUREMENT (Onsite Construction Contractor)

3.0 CONSTRUCTION

- 3.1 Onsite Construction Contractor
- 3.2 Offsite Construction Contractor
- 3.3 Operating Contractor Construction
- 3.4 Project Management (Operating Contractor)

APPENDIX B

BA/BO Schedule

KAISER ENGINEERS HANFORD

BA/BO SCHEDULE
PROJECT W-058
CROSS SITE TRANSFER SYSTEM REPLACEMENT

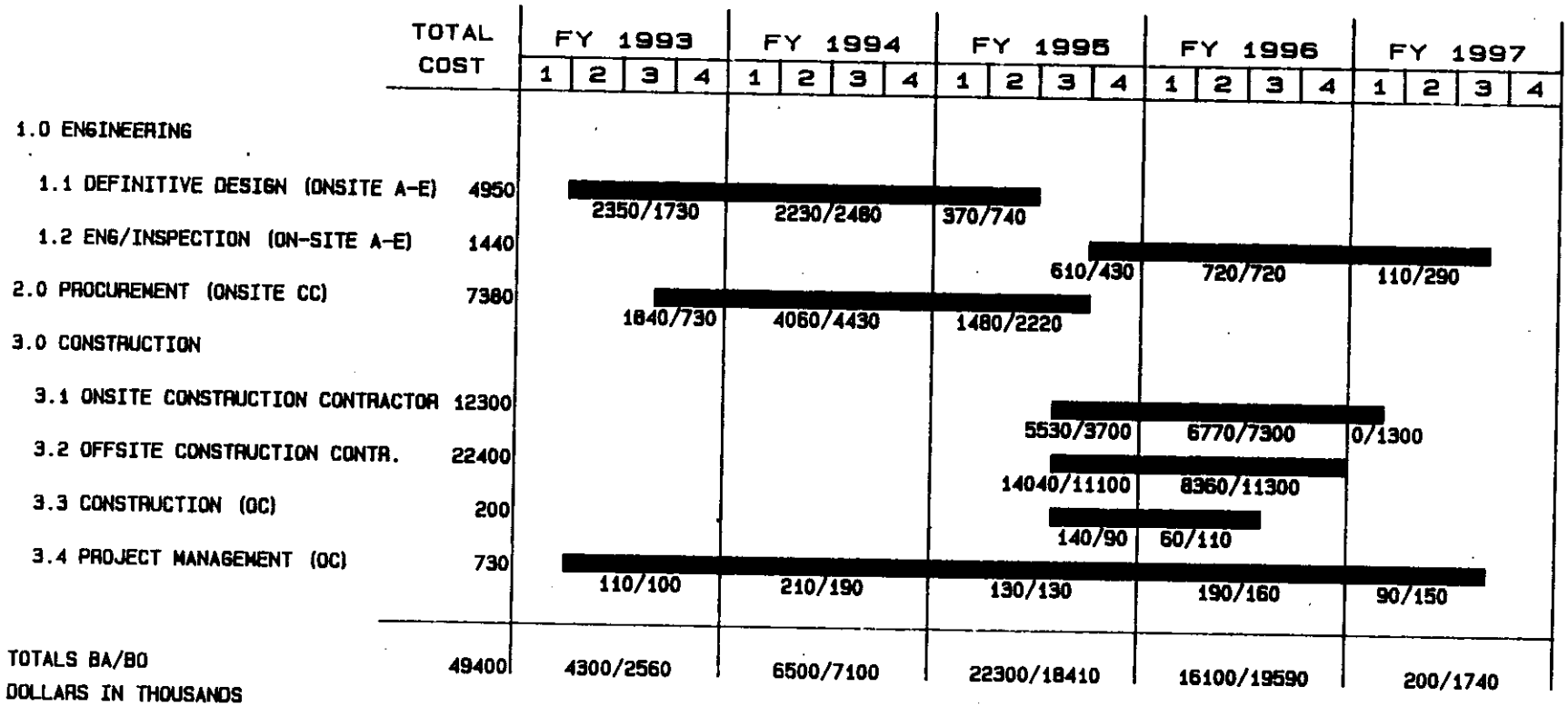

DATE: 04-25-1991
KEH PE: J.L.HENDERSON
CLIENT PE: J.M.LIGHT

APPENDIX C

Cost Estimate Summary

** KAISER ENGINEERS INTERACTIVE ESTIMATING **
CROSS SITE TRANSFER SYSTEM REPLACEMENT
CONCEPTUAL
KEHR01 - PROJECT COST SUMMARY

COST CODE	DESCRIPTION	ESCALATED TOTAL COST	CONTINGENCY %	CONTINGENCY TOTAL	TOTAL DOLLARS
000	ENGINEERING	5,190,000	23	1,210,000	6,400,000
	(ADJUSTED TO MEET DOE 5100.4)	10,000		-10,000	
460	IMPROVEMENTS TO LAND	3,100,000	30	930,000	4,030,000
550	OTHER STRUCTURES	4,580,000	24	1,110,000	5,690,000
600	UTILITIES	23,300,000	25	5,830,000	29,130,000
	(ADJUSTED TO MEET DOE 5100.4)	-40,000			-40,000
700	SPECIAL EQUIP/PROCESS SYSTEMS	3,460,000	21	730,000	4,190,000
	PROJECT TOTAL	39,600,000	25	9,800,000	49,400,000

TYPE OF ESTIMATE	CONCEPTUAL	MARCH 21, 1991
ARCHITECT ENGINEER		
OPERATING CONTRACTOR	J. M Lift	3/21/91

REMARKS:

(ROUNDED/ADJUSTED TO THE NEAREST " 10,000 / 100,000 " - PERCENTAGES NOT RECALCULATED TO REFLECT ROUNDING)

** KAISER ENGINEERS INTERACTIVE ESTIMATING **
CROSS SITE TRANSFER SYSTEM REPLACEMENT
CONCEPTUAL
KEHR02 - WORK BREAKDOWN STRUCTURE SUMMARY

WBS	DESCRIPTION	ESTIMATE SUBTOTAL	ONSITE INDIRECTS	SUB TOTAL	ESCALATION %	ESCALATION TOTAL	SUB TOTAL	CONTINGENCY %	CONTINGENCY TOTAL	TOTAL DOLLARS
110000	DEFINITIVE DESIGN (ON SITE A-E)	3424753	0	3424753	16.36	560288	3985041	24	965974	4951015
120000	ENG./INSPECTION (ON SITE A-E)	905346	0	905346	32.87	297586	1202932	20	240585	1443518
SUBTOTAL 1	ENGINEERING	4330099	0	4330099	19.81	857874	5187973	23	1206559	6394533
211001	TRANSFER PUMPS	2298038	0	2298038	10.04	230723	2528761	25	632190	3160951
211002	VENT STATION EQUIPMENT	117285	0	117285	10.04	11775	129060	25	32265	161326
211003	PIPING SPOOLS	2950138	0	2950138	10.04	296194	3246332	25	811583	4057915
SUBTOTAL 211	PROCUREMENT (ON SITE A-E)	5365461	0	5365461	10.04	538692	5904153	25	1476038	7380192
SUBTOTAL 2	PROCUREMENT	5365461	0	5365461	10.04	538692	5904153	25	1476038	7380192
310000	ESCORTS	16896	0	16896	18.66	3153	20049	25	5012	25061
SUBTOTAL 310	ESCORTS	16896	0	16896	18.66	3153	20049	25	5012	25061
311100	CROSS TIE PIPING	919279	0	919279	18.66	171538	1090817	25	272704	1363520
311200	241-SY A&B VALVE PITS	386036	0	386036	18.66	72033	458069	25	113149	571219
311300	DIVERSION BOX #1	474677	0	474677	18.66	88575	563252	24	133158	696410
SUBTOTAL 311	200 WEST AREA TRANSFER SYST	1779992	0	1779992	18.66	332146	2112138	25	519011	2631149
312100	CROSS TIE PIPING	3399595	0	3399595	18.66	634365	4033960	25	1008490	5042449
312200	DIVERSION BOX #2	496039	0	496039	18.66	92562	588601	24	139666	728267
312300	DIVERSION BOX #3	307037	0	307037	18.66	57294	364331	23	83599	447928
312400	244-A LIFT STATION	377432	0	377432	18.66	70429	447861	27	121028	568889
SUBTOTAL 312	200 EAST AREA TRANSFER SYST	4580103	0	4580103	18.66	854650	5434753	25	1352783	6787533
313000	TRENCH EXCAVATION/SITEWORK	1850772	0	1850772	18.66	345354	2196126	30	658838	2854963
SUBTOTAL 31	ON SITE CONSTRUCTION CONTRA	8227763	0	8227763	18.66	1535303	9763066	26	2535644	12298706
321000	OFF SITE CONST. CONTR. TRNS. PIPING	11697033	1779555	13476588	18.66	2514731	15991319	25	3997830	19989150
322000	OFF SITE CONSTR. CONTR.VENT STATION	736935	110541	847476	18.66	158138	1005616	24	236953	1242567
323000	TRENCH EXCAVATION/SITEWORK	663696	99554	763250	18.66	142423	905673	30	271702	1177375
SUBTOTAL 32	OFF SITE CONSTRUCTION CONTR	13097664	1989650	15087314	18.66	2815292	17902608	25	4506485	22409092

** KAISER ENGINEERS INTERACTIVE ESTIMATING **
CROSS SITE TRANSFER SYSTEM REPLACEMENT
CONCEPTUAL
KEHR02 - WORK BREAKDOWN STRUCTURE SUMMARY

WBS	DESCRIPTION	ESTIMATE SUBTOTAL	ONSITE INDIRECTS	SUB TOTAL	ESCALATION %	ESCALATION TOTAL	SUB TOTAL	CONTINGENCY %	CONTINGENCY TOTAL	TOTAL DOLLARS
330000	OPERATING CONTRACTOR CONSTRUCTION	160000	0	160000	21.15	33840	193840	10	19384	213224
340001	PROJECT MANAGEMENT (OPER. CONTR.)	600000	0	600000	13.90	83400	683400	10	68340	751740
SUBTOTAL 3	CONSTRUCTION	22085427	1989650	24075077	18.56	4467835	28542914	25	7129853	35672762
PROJECT TOTAL		31,780,987	1,989,650	33,770,637	17.37	5,864,401	39,635,040	25	9,812,450	49,447,487

1. DOCUMENTS AND DRAWINGS

DOCUMENTS FUNCTIONAL DESIGN CRITERIA " REPLACEMENT OF THE CROSS SITE TRANSFER SYSTEM " REV. 0 DATED JAN,1991.
CROSS SITE TRANSFER SYSTEM " CONCEPTUAL DESIGN REPORT (F) MARCH 1991"

DRAWINGS ES 058-M10 THRU ES058-M19 - ES 058-C1 - ES 058-S1 & S2

2. MATERIAL PRICES

UNIT COSTS REPRESENT CURRENT PRICES FOR SPECIFIED MATERIAL. VENDOR INFORMATION WAS OBTAINED FOR THE FOLLOWING ITEMS:
SEE ATTACHED QUOTE

3. LABOR RATES

CURRENT HANFORD BASE RATES AS ISSUED BY KEH (ISSUE # 14, REV. 0, DATED 4-1-91) INCLUDE FRINGE BENEFITS, LABOR INSURANCE, TAXES AND TRAVEL WHERE APPLICABLE.

4. GENERAL REQUIREMENTS/TECHNICAL SERVICES

A.) ONSITE CONSTRUCTION FORCES GENERAL REQUIREMENTS AND TECHNICAL SERVICES COSTS ARE INCLUDED AS A COMPOSITE PERCENTAGE BASED ON THE KEH ESTIMATING FACTOR/BILLING SCHEDULE REVISION 11 DATED NOVEMBER 11, 1991. THE TOTAL COMPOSITE PERCENTAGE APPLIED TO ONSITE CONSTRUCTION FORCES LABOR FOR THIS PROJECT IS 72 TO 79% FOR SHOP WORK AND 102 TO 109% FOR FIELD WORK WHICH IS REFLECTED IN THE "OH&P / B & I" COLUMN OF THE ESTIMATE DETAIL.

B.) FIXED PRICE CONTRACTOR OVERHEAD, PROFIT, BOND AND INSURANCE COSTS HAVE BEEN APPLIED AT THE FOLLOWING PERCENTAGES AND ARE REFLECTED IN THE "OH&P / B & I" COLUMN OF THE ESTIMATE DETAIL:
LABOR 25% - MATERIAL 25% - SUBCONTRACT 10%

5. ESCALATION

ESCALATION CALCULATED BY THE HANFORD MATERIAL & LABOR ESCALATION STUDY , FEBRUARY,1991.

6. ROUNDING - LINE:

ITEM COST OF $10,000 AND A TOTAL COST OF $100,000.

7. REMARKS

A.) AS OF DECEMBER 1, 1989, QUALITY SUPPORT AND SAFETY FOR CONSTRUCTION FORCES ARE INCLUDED IN THE CRAFT ADDER.

B.) ASSUME OPERATING CONTRACTOR WILL FURNISH RAD MONITOR

C.) ASSUME OPERATING CONTRACTOR WILL FURNISH & MAINTAIN RESTROOM TRAILERS DURING PROJECT CONSTRUCTION.

D.) TRENCH EXCAVATION QUANTITIES BASED ON 5 FT. BOTTOM WITH 1 TO 1 SLOPES OVER 5 FT. DEEP.

E.) SWP ADDER FOR CF CONSTRUCTION IS 30% PER KEH FIELD SUPERINTENDENT RECOMMENDATION TO BETTER REFLECT ACTUAL TIME LOST IN CONTAMINATED WORK AREAS.

F.) ESTIMATE DOES NOT INCLUDE ANY BURIAL, BURNOUT OR HAULING IN OF CLEAN SOIL.

G.) ASSUME HAND EXCAVATION @ 241 TANK FARM, 221-B, & 244-A VAULT.

H.) STABILIZATION BY CF CONSTRUCTION IS AN ALLOWANCE OF 50% OF THE TOTAL TRENCH LENGTH BY 20 FT. WIDE.

I.) STABILIZATION BY FP CONSTRUCTION IS AN ALLOWANCE OF 25% OF THE TOTAL TRENCH LENGTH BY 20 FT. WIDE.

J.) AN ALLOWANCE WAS USED FOR THE AMOUNT OF EARTH BERMING REQUIRED BECAUSE CENTERLINE PROFILE WAS NOT AVAILABLE AT THE TIME OF ESTIMATE.

K.) ASSUME ESCORTS FOR FIXED PRICE CONTACTOR ONLY DURING CONSTRUCTION IN 200 EAST AND WEST AREAS.

L.) ASSUME EXCAVATED MATERIAL FOR FIXED PRICE CONSTRUCTION WILL BE FREE OF CONTAMINATION.

M.) THE ONSITE CONSTRUCTION CONTRACTOR, CPAF WILL PERFORM ALL CONSTRUCTION ACTIVITIES FROM 241 SY VALVE PITS TO AND INCLUDING DIV.BOX NO. 1 AND FROM DIV. BOX #2 (INCLUDING BOX #2) TO 244-A LIFT STATION INCLUDING DIV. BOX #3.

N.) THE OFFSITE CONST. CONTRACTOR WILL PERFORM ALL CONSTRUCTION ACTIVITIES FROM DIV. BOX #1 TO DIV. BOX #2 INCLUDING VENT STATION, PIPING & DRAINS.

O.) ESTIMATE DOES NOT ALLOW FOR DOUBLE SECURITY.

P.) TOTAL DOLLAR OF $965,974 FOR DEFINITIVE DESIGN CONTINGENCY INCLUDES FOLLOWING:
   1.) $171,837 FOR DESIGN OF ADDITIONAL LEAK DETECTION
   2.) $ 36,051 FOR DESIGN/CALCULATION FOR SAFETY CLASS II JUMPERS

WBS	DESCRIPTION	ESTIMATE SUBTOTAL	ONSITE INDIRECTS	SUB TOTAL	ESCALATION %	ESCALATION TOTAL	SUB TOTAL	CONTINGENCY %	CONTINGENCY TOTAL	TOTAL DOLLARS
000	ENGINEERING									
110000	DEFINITIVE DESIGN (ON SITE A-E)	3424753	0	3424753	16.36	560288	3985041	24	965974	4951015
120000	ENG./INSPECTION (ON SITE A-E)	905346	0	905346	32.87	297586	1202932	20	240585	1443518
TOTAL 000	ENGINEERING	4330099	0	4330099	19.81	857874	5187973	23	1206559	6394533
460	IMPROVEMENTS TO LAND									
313000	TRENCH EXCAVATION/SITEWORK	1850772	0	1850772	18.66	345354	2196126	30	658838	2854963
323000	TRENCH EXCAVATION/SITEWORK	663696	99554	763250	18.66	142423	905673	30	271702	1177375
TOTAL 460	IMPROVEMENTS TO LAND	2514468	99554	2614022	18.66	487777	3101799	30	930540	4032338
550	OTHER STRUCTURES									
211001	TRANSFER PUMPS	2298038	0	2298038	10.04	230723	2528761	25	632190	3160951
211002	VENT STATION EQUIPMENT	117285	0	117285	10.04	11775	129060	25	32265	161326
311200	241-SY A&B VALVE PITS	215917	0	215917	18.66	40289	256206	24	62683	318890
311300	DIVERSION BOX #1	243926	0	243926	18.66	45517	289443	22	64706	354148
312200	DIVERSION BOX #2	251785	0	251785	18.66	46984	298769	22	67209	365977
312300	DIVERSION BOX #3	234248	0	234248	18.66	43712	277960	22	62006	339964
312400	244-A LIFT STATION	258962	0	258962	18.66	48322	307284	28	85884	393168
322000	OFF SITE CONSTR. CONTR.VENT STATION	357556	53635	411191	18.66	76727	487919	22	107529	595446
TOTAL 550	OTHER STRUCTURES	3977717	53635	4031352	13.50	544049	4575402	24	1114472	5689870
600	UTILITIES									
211003	PIPING SPOOLS	2950138	0	2950138	10.04	296194	3246332	25	811583	4057915
310000	ESCORTS	16896	0	16896	18.66	3153	20049	25	5012	25061
311100	CROSS TIE PIPING	839281	0	839281	18.66	156610	995891	25	248973	1244863
311300	DIVERSION BOX #1	59060	0	59060	18.66	11021	70081	25	17520	87601
312100	CROSS TIE PIPING	3102395	0	3102395	18.66	578907	3681302	25	920326	4601627
312200	DIVERSION BOX #2	43797	0	43797	18.66	8173	51970	25	12992	64962
321000	OFF SITE CONST. CONTR. TRNS. PIPING	11145986	1696898	12842884	18.66	2396482	15239366	25	3809842	19049208
TOTAL 600	UTILITIES	18157553	1696898	19854451	17.38	3450540	23304991	25	5826248	29131237

WBS	DESCRIPTION	ESTIMATE SUBTOTAL	ONSITE INDIRECTS	SUB TOTAL	ESCALATION %	ESCALATION TOTAL	SUB TOTAL	CONTINGENCY %	CONTINGENCY TOTAL	TOTAL DOLLARS
700	SPECIAL EQUIP/PROCESS SYSTEMS									
311100	CROSS TIE PIPING	79998	0	79998	18.66	14928	94926	25	23731	118657
311200	241-SY A&B VALVE PITS	170119	0	170119	18.66	31744	201863	25	50466	252329
311300	DIVERSION BOX #1	171691	0	171691	18.66	32037	203728	25	50932	254661
312100	CROSS TIE PIPING	297200	0	297200	18.66	55458	352658	25	88164	440822
312200	DIVERSION BOX #2	200457	0	200457	18.66	37405	237862	25	59465	297328
312300	DIVERSION BOX #3	72789	0	72789	18.66	13582	86371	25	21593	107964
312400	244-A LIFT STATION	118470	0	118470	18.66	22107	140577	25	35144	175721
321000	OFF SITE CONST. CONTR. TRNS. PIPING	551047	82657	633704	18.66	118249	751953	25	187988	939942
322000	OFF SITE CONSTR. CONTR.VENT STATION	379379	56906	436285	18.66	81411	517697	25	129424	647121
330000	OPERATING CONTRACTOR CONSTRUCTION	160000	0	160000	21.15	33840	193840	10	19384	213224
340001	PROJECT MANAGEMENT (OPER. CONTR.)	600000	0	600000	13.90	83400	683400	10	68340	751740
TOTAL 700	SPECIAL EQUIP/PROCESS SYSTEMS	2801150	139563	2940713	17.82	524161	3464875	21	734631	4199509
PROJECT TOTAL		31,780,987	1,989,650	33,770,637	17.37	5,864,401	39,635,040	25	9,812,450	49,447,487

** KAISER ENGINEERS INTERACTIVE ESTIMATING **
CROSS SITE TRANSFER SYSTEM REPLACEMENT
CONCEPTUAL
KEHR05 - ESTIMATE SUMMARY BY CSI DIVISION

WBS	DESCRIPTION	ESTIMATE SUBTOTAL	ONSITE INDIRECTS	SUB TOTAL	ESCALATION %	ESCALATION TOTAL	SUB TOTAL	CONTINGENCY %	CONTINGENCY TOTAL	TOTAL DOLLARS
ENGINEERING										
21	CIVIL	279450	0	279450	17.22	48125	327575	24	78583	406158
22	ENVIRON ENGRG	53863	0	53863	20.90	11259	65122	23	14950	80072
24	STRUCTURAL	7320	0	7320	32.87	2406	9726	20	1945	11671
26	FIRE PROT/SAFTY	20069	0	20069	28.55	5730	25799	21	5419	31218
27	PIPING/VESSEL	881247	0	881247	17.49	154152	1035399	24	247575	1282974
28	HVAC	16592	0	16592	16.36	2714	19306	24	4680	23986
29	INSTRUMENT	675900	0	675900	17.43	117818	793718	24	189926	983645
30	CATHODIC PROTECTION	229345	0	229345	16.36	37521	266866	24	64688	331554
31	ELECTRICAL	503365	0	503365	20.23	101848	605213	23	140051	745264
32	SPECIF	39467	0	39467	16.36	6457	45924	24	11132	57056
33	SPCLTY ENGRG	47570	0	47570	16.36	7782	55352	24	13417	68770
35	DESIGN ADMIN	169336	0	169336	17.76	30080	199416	24	47528	246944
36	S A R A	14030	0	14030	16.36	2295	16325	24	3957	20283
38	VALUE ENGINEERING	24200	0	24200	16.36	3959	28159	24	6826	34985
40	PROJECT MANAGER	286767	0	286767	17.39	49877	336644	24	80591	417236
41	WORD PROCESSING	20371	0	20371	16.36	3333	23704	24	5746	29449
42	QUALITY ENGINEERING	40200	0	40200	23.68	9518	49718	22	11047	60767
44	ACCEPTANCE INSPECTION	339838	0	339838	32.22	109504	449342	20	90526	539867
45	PROJECT PLANNING	72800	0	72800	20.79	15138	87938	23	20215	108152
46	ESTIMATES	175566	0	175566	17.85	31337	206903	24	49261	256164
49	SUB/PROC	22464	0	22464	29.05	6526	28990	21	6055	35043
61	CM ADMINISTRATION	5200	0	5200	16.37	851	6051	24	1467	7517
62	SURVEY	38340	0	38340	24.88	9538	47878	22	10491	58369
63	CONSTR ENGRG	115536	0	115536	16.36	18902	134438	24	32588	167025
65	RECORDS MGMT/TURNOVER	41366	0	41366	21.74	8991	50357	23	11448	61805
66	AS-BUILTING	134560	0	134560	32.87	44230	178790	20	35758	214548
70	WORK ORDER	52780	0	52780	25.27	13336	66116	22	14422	80539
74	TRAVEL	22557	0	22557	20.60	4647	27204	23	6267	33472
	TOTAL ENGINEERING	4330099	0	4330099	19.81	857874	5187973	23	1206559	6394533
CONSTRUCTION										
01	GENERAL REQUIRMENTS	399784	0	399784	18.66	74600	474384	24	114448	588830
02	SITEWORK	2595469	103768	2699237	18.66	503679	3202916	30	951556	4154467
03	CONCRETE	333153	10569	343722	18.66	64138	407860	23	93952	501814
05	METALS	290633	16374	307007	18.66	57288	364295	20	72859	437153
07	MOISTURE AND THERMAL	6374	116	6490	18.67	1212	7702	20	1539	9241
09	FINISHES	16009	497	16506	18.66	3080	19586	20	3918	23501

** KAISER ENGINEERS INTERACTIVE ESTIMATING **
CROSS SITE TRANSFER SYSTEM REPLACEMENT
CONCEPTUAL
KEHR05 - ESTIMATE SUMMARY BY CSI DIVISION

WBS	DESCRIPTION	ESTIMATE SUBTOTAL	ONSITE INDIRECTS	SUB TOTAL	ESCALATION %	ESCALATION TOTAL	SUB TOTAL	CONTINGENCY %	CONTINGENCY TOTAL	TOTAL DOLLARS
15	MECHANICAL	21008316	1718763	22727079	16.62	3778369	26505449	25	6632988	33138439
16	ELECTRICAL	2201150	139563	2340713	18.83	440761	2781475	24	666291	3447769
19	OC PROJECT MANAGEMENT	600000	0	600000	13.90	83400	683400	10	68340	751740
	TOTAL CONSTRUCTION	27450888	1989650	29440538	17.01	5006527	34447067	25	8605891	43052954
	PROJECT TOTAL	31,780,987	1,989,650	33,770,637	17.37	5,864,401	39,635,040	25	9,812,450	49,447,487

REFERENCE: ESTIMATE BASIS SHEET — PAGE 4 & 5 OF 27
COST CODE ACCOUNT SUMMARY — PAGE 6 & 7 OF 27

THE U.S. DEPARTMENT OF ENERGY - RICHLAND ORDER 5700.3 "COST ESTIMATING, ANALYSIS AND STANDARDIZATION" DATED 3-27-85, PROVIDES GUIDELINES FOR ESTIMATE CONTINGENCIES. THE GUIDELINE FOR A CONCEPTUAL ESTIMATE SHOULD HAVE AN OVERALL RANGE OF 15 TO 25 % .

CONTINGENCY IS EVALUATED AT THE THIRD COST CODE LEVEL AND SUMMARIZED AT THE PRIMARY AND SECONDARY COST CODE LEVEL OF THE DETAILED COST ESTIMATE.

ENGINEERING

COST CODE 000 (DEFINITIVE DESIGN)

110000 CONTINGENCY OF 24% WAS APPLIED TO DEFINITIVE DESIGN FOR UNFORSEEN AND UNPREDICTABLE CONDITIONS AND TO ALLOW FOR ADDITIONAL DESIGN OF EXPANDED LEAK DETECTION, ANALYSIS OF JUMPERS FRD SAFETY CLASS II DESIGN, AND PREPARATION OF COMPLIANCE MATRIX FOR DOE ORDER 6430.1A.

120000 CONTINGENCY OF 20% WAS APPLIED TO E/I DURING CONSTRUCTION TO ALLOW FOR POSSIBLE CHANGES IN DELIVERABLES AND CHANGE IN SCHEDULE WHICH WOULD REQUIRE ADDITIONAL ADDITIONAL MANHOURS FOR SUPPORT.

AVERAGE ENGINEERING CONTINGENCY 23%

CONSTRUCTION

COST CODE 460 (IMPROVEMENTS TO LAND)

313000 A 30% CONTINGENCY WAS USED ON EXCAVATION DUE TO THE POSSIBILITIES OF ENCOUNTERING EXISTING UNDERGROUND UTILITIES, CONTAMINATED AREAS, OR QUANTITY CHANGES AS MORE INFORMATION IS AVAILABLE ON EXISTING GROUND CONTOURS.

323000 A 30% CONTINGENCY WAS APPLIED TO THE FP TRENCH EXCAVATION TO ALLOW FOR POSSIBLE QUANTITY CHANGES IN TAKE-OFF AS MORE INFORMATION IS AVAILABLE ON EXISTING GRADE CONTOURS.

COST CODE 550 (OTHER STRUCTURES)

211001 A 25% CONTINGENCY WAS APPLIED TO ALLOW FOR COST GROWTH THAT COULD BE BROUGHT ABOUT BY ADDTIONAL REQUIREMENTS AS OUTLINED IN THE PROCUREMENT SPECIFICATIONS THAT A VENDOR WOULD HAVE TO MEET.

211002 A 25% CONTINGENCY WAS APPLIED TO ALLOW FOR COST GROWTH THAT COULD BE BROUGHT ABOUT BY ADDTIONAL REQUIREMENTS AS OUTLINED IN THE PROCUREMENT SPECIFICATIONS THAT A VENDOR WOULD HAVE TO MEET.

311200 A 25% CONTINGENCY WAS APPLED TO THE VALVE PITS TO ALLOW FOR UNCERTAINTIES IN CONSTRUCTION DUE TO LOCATION OR INTERFERENCES.

311300
312200 AN AVERAGE OF 22% WAS APPLIED TO DIVERSION BOX FABRICATION
312300 TO ALLOW FOR COST GROWTH DUE TO DESIGN CHANGES IN PIT SIZE.

COST CODE 460 (IMPROVEMENTS TO LAND CON'T)

312400 A 30% CONTINGENCY WAS APPLIED DUE TO THE WORK BEING PERFORMED IN A CONTAMINATED ENVIRONMENT.

322000 AN AVERAGE OF 22% CONTINGENCY WAS APPLIED TO THE OFF SITE CONSTRUCTION CONTRACTOR AS THE MAJORITY WILL HAVE PREVIOUS EXPERIENCE ON STRUCTURES OF THIS TYPE AND THE SCOPE IS NOT LIKELY TO CHANGE DURING DEFINITIVE DESIGN.

COST CODE 600 (UTILITIES)

211003 A 25% CONTINGENCY WAS APPLIED TO THE PROCUREMENT OF THE PIPING SPOOLS TO ALLOW FOR CHANGES OR ADDITIONS REQUIRED OF THE VENDOR AS OUTLINED BY PROCUREMENT DOCUMENTS. ALSO TO SUPPORT ANY CHANGES SHOULD PIPE ROUTING CHANGE THUS AFFECT SPOOL CONFIGURATION AND QUANTITY.

310000 A 25% CONTINGENCY WAS APPLIED TO ESCORTS TO ALLOW FOR AN INCREASE IN THE NUMBER REQUIRED AND THE DURATION THEY WOULD BE NEEDED.

311100 A 25% CONTINGENCY WAS APPLIED TO CROSS TIE PIPING TO ALLOW FOR CHANGES RESULTING FROM ROUTING CHANGES AND THE POSSIBILITY OF RADIOLOGICAL CONTAMINATION.

311300 A 25% CONTINGENCY WAS APPLIED TO ALLOW FOR CHANGES IN THE DRAIN PIPE ROUTING AND POSSIBILITY OF ANY SWP REQUIREMENTS AT EXISTING TIE-IN POINTS.

312100 A 25% CONTINGENCY WAS APPLIED TO CROSS TIE PIPING TO ALLOW FOR CHANGES RESULTING FROM ROUTING CONFIGURATION AND THE POSSIBILITY OF RADIOLOGICAL CONTAMINATION.

312200 A 25% CONTINGENCY WAS APPLIED TO ALLOW FOR CHANGES IN THE DRAIN PIPE ROUTING AND POSSIBILITY OF ANY SWP REQUIREMENTS AT EXISTING TIE-IN POINTS.

321000 A 25% CONTINGENCY WAS APPLIED TO ELECTRICAL AND MECHANICAL TO ALLOW FOR ADDITIONAL COST GROWTH DUE TO ROUTING OF PIPE AND ADDED LEAK DETECTION.

COST CODE 700 (SPECIAL EQUIP/PROCESS SYSTEMS)

311100
311200
311300
312100
312200 AN AVERAGE CONTINGENCY OF 25% WAS APPLIED TO SPEC/EQUIP. DUE TO COMPLEXITIES ASSOCIATED
312300 WITH SAFETY CLASS II COMPLEX INSTRUMENTATION ON BOOSTER PUMP CONTROLS. ALSO ANY COST GROWTH
312400 RESULTING FROM CHANGES IN THE EXISTING LOCATIONS OF THE DIVERSION BOXES AND THE ROUTING OF
321000 THE TRANSFER LINE.
322000

330000 AN AVERAGE 10% CONTINGENCY WAS APPLIED PER CUSTOMER DIRECTION.
340001

AVERAGE CONSTRUCTION CONTINGENCY 25%

AVERAGE PROJECT CONTINGENCY 25%

** KAISER ENGINEERS INTERACTIVE ESTIMATING **
CROSS SITE TRANSFER SYSTEM REPLACEMENT
CONCEPTUAL
KEHR07 - ONSITE INDIRECT COSTS BY WBS

WBS	DESCRIPTION	ESTIMATE SUBTOTAL	CONTRACT %	ADMINISTRATION TOTAL	BID PACK PREP.	OTHER INDIRECTS	TOTAL INDIRECTS
110000	DEFINITIVE DESIGN (ON SITE A-E)	3424753	0.00	0	0	0	0
120000	ENG./INSPECTION (ON SITE A-E)	905346	0.00	0	0	0	0
211001	TRANSFER PUMPS	2298038	0.00	0	0	0	0
211002	VENT STATION EQUIPMENT	117285	0.00	0	0	0	0
211003	PIPING SPOOLS	2950138	0.00	0	0	0	0
310000	ESCORTS	16896	0.00	0	0	0	0
311100	CROSS TIE PIPING	919279	0.00	0	0	0	0
311200	241-SY A&B VALVE PITS	386036	0.00	0	0	0	0
311300	DIVERSION BOX #1	474677	0.00	0	0	0	0
312100	CROSS TIE PIPING	3399595	0.00	0	0	0	0
312200	DIVERSION BOX #2	496039	0.00	0	0	0	0
312300	DIVERSION BOX #3	307037	0.00	0	0	0	0
312400	244-A LIFT STATION	377432	0.00	0	0	0	0
313000	TRENCH EXCAVATION/SITEWORK	1850772	0.00	0	0	0	0
321000	OFF SITE CONST. CONTR. TRNS. PIPING	11697033	15.00	1754555	25000	0	1779555
322000	OFF SITE CONSTR. CONTR.VENT STATION	736935	15.00	110541	0	0	110541
323000	TRENCH EXCAVATION/SITEWORK	663696	15.00	99554	0	0	99554
330000	OPERATING CONTRACTOR CONSTRUCTION	160000	0.00	0	0	0	0
340001	PROJECT MANAGEMENT (OPER. CONTR.)	600000	0.00	0	0	0	0
PROJECT TOTAL		31,780,987		1,964,650	25,000	0	1,989,650

STATEMENT OF WORK

PROJECT W-058
REPLACEMENT OF CROSS SITE TRANSFER SYSTEM

Client: Westinghouse Hanford Company Date: March 11, 1991

Prepared by: J. L. Henderson/J. R. Collins

FUNCTION

This project will provide two new parallel encased pipelines to connect the SY Tank Farm in the 200 West Area with the 200 East tank farms. This pipeline covers a distance of approximately 6.5 miles and replaces the existing Cross Site Transfer System. This project also provides booster pumps to assist in West to East liquid waste transfers and the associated instrumentation and electrical equipment.

SPECIAL REQUIREMENTS

This new system will comply with DOE Order 6430.1A, Division 13, Section 1323 for Radioactive Liquid Waste Facilities (RLWF), Federal Resource Conservation and Recovery Act (RCRA) requirements, Code of Federal Regulations (CFR) 40CFR260-265, and the state of Washington, Washington Administration Code (WAC), WAC-173-303.

INTERFACES

The major pipeline interfaces are at SY-241-A&B in the West Area and the 244-A Lift Station in the East Area. There is a drain line interface with the 221-B building. There will be instrumentation interfaces at both the East and West Areas.

SIGNIFICANT MILESTONES

This project supports portions of the Hanford Federal Facility Agreement and Consent Order (Tri-Party Agreement) (Ecology et. al. 1989) that deal with tank cleanup. The cross site transfer system will be the principle means of waste transfer.

CONTRACT TYPES

The onsite architect-engineer will perform the definitive design, engineering during construction, and acceptance testing and inspection. An independent architect-engineer will be contracted for an independent review of the transfer piping design concept, detail design, and stress analysis verification.

The onsite construction contractor will procure the major pieces of equipment.

An offsite construction contractor will be responsible for construction of portions of the new system. The onsite construction contractor will be responsible for construction within the tank farms and interconnection to existing facilities.

REFERENCE DOCUMENTS

Engineering Study, "Replacement of the Cross Site Transfer System," Project W-058, W0058ES.

Functional Design Criteria, "Replacement of the Cross Site Transfer System," Project W-058, WHC-SD-W058-FDC-001, Rev. 0.

Preliminary Safety Evaluation for the Replacement of Cross Site Transfer System, Project W-058, WHC-SD-W-058-PSE-001, Rev. 0.

Conceptual Design Report, Replacement of the Cross Site Transfer System, Project W-058, WHC-SD-W-058-CDR-001, Rev. 0

Letter of Instruction, 9056616, Project W-058, "Cross Site Transfer System Replacement", Conceptual Design Letter of Instruction, No. 1.

ESTIMATE BASIS

Definitive Design Deliverables

Kaiser Engineers Hanford (KEH) will provide the following engineering documents to support construction of this project.

1.0 Civil (21)/Structural (24)

1.1 Drawings:

- 1 - Drawing list.
- 1 - Civil vicinity map.
- 4 - Civil Site Plans; one at Vent Station, one at each Diversion Box.
- 7 - Structural: Vent Station, Plans, Sections, Elevations, and Details.
- 7 - Structural: Diversion Box Plans, Sections, Elevations and Details.
- 3 - Structural: 241-SY-A, 241-SY-B, 244-A Elevations and Details for tie-ins.
- 1 - Structural: Vent Station/Diversion Boxes liner details.

1.2 Specifications:

- 2 - Construction Specifications input. One for fixed Price and the other for CPAF, includes Safety Class 2 requirements.

1.3 Calculations:

- Structural Calculations for Vent Station, Cover Blocks, Pump Support.
- Structural Calculations for Diversion Boxes, Cover Blocks and Pump Support.
- Structural calculations for existing valve pits/lift station tie-ins.
- Structural calculations for miscellaneous Electrical/ Instrumentation equipment and core drills (no HVAC at this time).

1.4 Miscellaneous:

- Design verification of Safety Class 2 items.
- Input to piping for crossing of roads, railroads, and buried water lines.

2.0 Piping/Vessels (27)

2.1 Drawings:

- 8 - P&ID's divided up by diversion box. Also included is a Key Plan and P&ID details.
- 13 - Piping Plan/Profile drawings at a scale of 1" = 50'. These drawings depict the coordinates and elevations of the piping and diversion boxes. Dimensioned pipe support locations are also shown.
- 4 - Pipe support detail drawings to show support and insulation details.
- 17 - Piping enlarged plans, sections and details. These drawings detail the piping and equipment in the diversion boxes, vent station and existing valve boxes.
- 8 - Piping jumper arrangement drawings. These drawings depict the jumper arrangement in each diversion box, valve box and vent station.

- 27 - Jumper assembly drawings which are used for jumper fabrication.
- 3 - Piping Plan, Sections and Details for the drain line tie-in at B-Plant (221-B).
- 4 - Piping Hydraulic Diagrams to verify drainage and assist in the hydraulic calculations.
- 3 - Catch Tank Vendor information drawings to be a part of the Catch Tank procurement specification.

2.2 Specifications

- 1 - Booster Pump procurement specification, which includes the instrumentation, enclosure and testing.
- 1 - Catch Tank procurement specification, which includes the pump.
- 1 - Sump Pump procurement specification for the vent station.
- 1 - Motor Operated Valve procurement specification for all of the jumper MOV's.
- 2 - Construction Specifications input. One for Fixed Price and the other for CPAF.

2.3 Calculations

- Code calculation to document material and wall thickness selection for the piping.
- A pipe stress calculation to document a typical expansion loop configuration for the Cross Site Transfer Line.
- Pipe stress calculations for an assumed 15 non-typical pipe configurations.
- Stress analysis for each pipe jumper.
- Stress analysis for the Safety Class 2 pipe supports.
- Stress analysis for the Safety Class 2 pipe anchors.
- Stress analysis of the jumper head to document pipe loads less than tested allowable.
- Hydraulic calculation to size and select spray system components.

- Heat loss calculation to document insulation selection.
- Hydraulic calculation to document booster pump selection.

2.4 Miscellaneous

- 130 - Weld Map drawings for CPAF weld documentation.
- Review and approval of vendor submittals for early procurement of the booster pumps and transfer piping.

3.0 INSTRUMENTATION (29)

3.1 Drawings

- 7 - P&ID's instrumentation input
- 16 - Logic diagrams for pump and valve operations, common troubles and inputs to the Master shutdown circuit.
- 2 - Multiplexer block diagrams
- 3 - CASS alarm interface drawings
- 1 - Annunciator and nameplate drawing
- 8 - Interconnection diagrams
- 10 - Instrument panel arrangement drawings
- 4 - Transmitter rack drawings
- 9 - Plans, elevations and details drawings
- 8 - Instrumentation enclosure drawings

3.2 Specifications

- 5 - CEM specifications for instrumentation
- 3 - Procurement specifications for instrumentation plus input to booster pump.
- 2 - Construction specification input, Fixed Price and CPAF

3.3 Calculations

- 16 - Instrumentation selection/justification calculations
- 1 - Flow meter calculation
- 1 - Tank level calculation

3.4 Acceptance Test Procedures

- 1 - ATP for 66 instrumentation loops.

3.5 Miscellaneous

- Review and approval of vendor submittals for early procurement of the booster pump.

4.0 ELECTRICAL (31)

4.1 Drawings

- 6 - Site Plans will be produced to show pole modification, transformer mounting, transmission line route and profile. It is assumed that transmission lines and equipment pads will be located on these drawings and also on the civil site plans with input from electrical.

- 9 - Power Plans to depict power layout, equipment pads, conduit/cable routing, grounding and various details.

- 24 - Elementary diagrams will provide schematics for pump and MOV control and wiring diagrams.

- 2 - Wire run/conduit schedules will provide a listing for all power and control circuits

- 5 - Electrical control modifications showing existing panel modifications required at 242 A & S. Requires instrumentation input.

- 15 - Cathodic Protection Plans

- 5 - Cathodic Protection Details

4.2 Specifications

- 2 - Construction Specification input, one Fixed Price and one CPAF.

- Procurement Specification input for piping/vessels booster pumps.
  - 480V requirement for cathodic protection
  - Metering
  - T-Lead quick disconnect requirements

4.3 Calculations

- 2 - sets of cathodic protection calculations

- Required transmission line evaluations

- Captor/Dapper study will be completed to provide a complete short circuit and coordination analysis as well as a load flow and voltage drop study.
- Conduit fill as required to verify code compliance
- Input catalog information to structural for seismic analysis for SDC 4.1 compliance.

4.4 Miscellaneous

- Review and approval of vendor submittals for early procurement of the booster pumps.

5.0 SPECIFICATIONS (32)

Prepare two early procurement specifications, two construction specification and support discipline engineering in preparing two ATP's.

6.0 PROCESS TECHNOLOGY (33)

6.1 Calculations

- 8 - Shielding calculations to support the diversion box and vent stations designs.
- 1 - Shielding calculations to determine earth covering for piping.

7.0 ASSUMPTIONS

The Definitive Design engineering estimate is based on the following assumptions.

7.1 General

a. The technical baseline documents are fully approved prior to start of definitive design and are consistent with technical baseline identified in Section II.

b. The definitive design is performed at one location and on a 5 day work week.

c. KEH is not involved in any permitting efforts.

d. The vent system as proposed in the CDR will be adequate. No HVAC design has been planned, for either a permanent vent station exhaust system or an upgrade of an existing exhaust system.

e. WHC will provide a waiver to those requirements in WHC-CM-4-9 that conflict with the FDC design requirements and the approved CDR.

f. The low point leak detection system as proposed in the CDR is adequate for definitive design.

g. Pipe routing topographical survey, radiological survey and geotechnical survey has been completed and results are available prior to the start of definitive design.

h. Qualification of a 3 inch jumper connector for the design conditions specified in the CDR by analysis and/or testing has been completed and the results available prior to start of definitive design.

i. The 30% design review will firmly establish the design concepts. The 70% design review finalizes all maintenance and operational comments.

j. A compliance matrix for DOE Order 6430.1A is not adequately defined to prepare an estimate therefore 160 mhrs are included in contingency.

k. Funding and management of independent A/E to perform peer review of definitive design will be provided by the O.C.

7.2 Civil/Structural

The design for sealing the diversion boxes/vent station, which is based on current projects W-062 and W-028 definitive design will be adequate.

7.3 Piping/Vessels

a. The specific destination of the drain from Diversion Box 2 to 221-B Building is known and no design modifications to existing facilities are required at 221-B.

b. A hand calculation based on the use of ASME publication, "Flexibility Analysis of Buried Pipe", E. C. Goodling, Jr., will satisfy the analysis requirements for the Safety Class 2 buried piping.

c. The vent and drain piping is excluded from the analysis and testing requirements of ASME B31.3 because design pressures are at or above zero but less than 15 psig.

7.4 Instrumentation

a. The vent station sump pump control will be provided by the pump vendor.

b. All CASS hardware and software additions or modifications will be provided by WHC.

c. Dedicated space will be set aside by WHC in the existing 244 Lift Station instrument enclosure for diversion box 3 and 244-A Lift Station instrument additions.

d. All MCS hardware and software additions or modifications for the 242-A MCS will be provided by WHC.

e. WHC will provide any temporary or permanent instrumentation for integrity testing of the piping system on the swab risers, pre-entry radiation monitoring at the vent station/diversion boxes.

f. The 242-A building will be the instrumentation and control interface for MCS.

g. A UPS is not required. None was identified in the CDR.

h. The booster pump vendor will provide the ATP for the pump controls and instrumentation.

i. The ATPs for the MCS and CASS modifications and additions will be provided by WHC.

j. WHC will provide a list of existing facility drawings during definitive design that require ECN modification for this project. No estimate has been provided as part of this planning.

7.5 Electrical

The two rectifiers will meet the cathodic protection requirements.

8.0 Contingency Analysis

A contingency of 18% has been applied to the definitive design estimate for unforeseen and unpredictable conditions. This is an engineering judgement and is based on completeness of design and unresolved environmental and quality compliance issues. An additional contingency has been applied to specific items identified during the conceptual design and discussed below:

8.1 It has been assumed that the low point leak detection and periodic integrity testing as proposed in the CDR will be acceptable for definitive design. It is uncertain at this time because a like system has not been through the permitting process. The risk is judged to be moderate that additional leak detection will be required. An additional contingency of 3,085 hours is included to provide leak detectors every 1000 feet of the transfer line at the encasement swab risers.

a. Piping/Vessels

One additional P&ID and two additional details on planned drawings for 176 hours.

b. Instrumentation

Three new drawings plus modifications or additions to 26 planned drawings for 2,279 hours.

c. Electrical

Five new drawings plus additions to the wire and conduit schedules for 630 hours.

8.2 It has been assumed that the piping jumpers can be qualified to Safety Class 2 requirements. To date this has not been demonstrated. The risk is judged to be high that additional work will be required . An additional contingency of 591 hours has been provided in piping.

DEFINITIVE DESIGN SUPPORT

Environmental Engineering Review (22)

- Review and approve the design documents for compliance with appropriate environmental regulatory requirements.

Safety Engineering Review (26)

- Review and approve the design documents for compliance with appropriate safety criteria, standards and procedures.

Design Safety Analysis (36)

- Provide input to discipline design groups on safety analysis requirements.
- Review design for compliance with project safety analysis documents.
- Provide equipment/system quality class requirements as necessary.

Value Engineering (38)

- Value Engineering (VE) to conduct a five (5) day VE session prior to starting Definitive Design planning.

Project Management (40)

- Control the coordination interface with customer.
- Ensure the project technical, budget, and schedule objectives are met.

- Submit the Definitive Design to Operating Contractor for review and approval.
- Issue 30% and 70% design review packages.
- Coordinate the review and disposition design review comments.
- Monitor and control project cost, schedule and technical baselines.
- Manage the engineering/inspection activities and project close our and turnover.
- Conduct periodic design coordination meetings with customer.
- Provide project cost and schedule status to the customer monthly.

Word Processing (41)

- Process project correspondence.
- Process the Construction and Procurement Specification and Acceptance Test Procedures.

Quality Assurance (42)

- Review, and approve the design documents for compliance with appropriate criteria, standards, and procedures.

Acceptance Inspection (44)

- Prepare Acceptance Inspection Plan for construction and provide vendor surveillances on early procurement contracts as required.

Project Control (45)

- Develop and maintain project schedule and cost baseline.
- Provide weekly/monthly schedule and cost analysis and variance reporting.

Cost Estimating (46)

- Produce a Project Cost Estimate at 30% Definitive Design.
- Fair Cost estimate for offsite contractor.
- Produce a Project Final Cost Estimate.
- Provide estimating support as required during Definitive Design.

Subcontracts and Procurement (49)

- Provide support, as required, for development of the early procurement packages and constructibility review of the construction specifications.

Construction Forces (60)

- Perform constructibility review of the definitive design media prepared by KEH.

Construction Management (61)

- Provide input to the Construction and Procurement Specifications.

Construction Engineering (63)

- Perform a Constructibility Review of the Definitive Design documents prepared by KEH.

Records Management (65)

- Establish and Maintain Project Engineering Files.

- Provide document distribution support services.

ENGINEERING/INSPECTION

KEH will provide the following engineering and inspection services during the construction of this project:

Civil/Structural (21 & 24)

- A full time, qualified civil/structural engineer will be assigned, in the field, to support the construction effort during the early civil/structural stage of construction. This support function will include: 1) Review and disposition of Fixed Price Contractor submittals, 2) Prepare and issue Engineering Change Notices (ECN's) 3) Disposition Nonconformance Reports (NCR's), 4) Attend construction meeting, 5) Be available to assist construction personnel in resolving technical issues.

Environmental Engineering (22)

- Perform overview and approval of all project ECNs and NCRs and submittals to ensure compliance with governing environmental requirements.

- Attend meetings and field trips as required to support construction activities.

Safety Engineering (26)

- Perform overview safety review and approval of all project ECNs and NCRs.

Piping Engineering (27)

- A full time, qualified piping engineer will be assigned to the field to support the construction effort during the piping installation phase of the project. This support function will include: 1) Review and disposition of Fixed Price contractor submittals, 2) Prepare and issue Engineering Change Notices (ECN's), 3) Disposition Nonconformance Reports (NCR's), 4) Attend construction meeting, 5) be available to assist construction personnel in resolving technical issues.

Instrumentation Engineering (29)

- A full time, qualified instrumentation engineer will be assigned in the field to support the construction effort during the latter phases of construction while instrumentation installation and check out activities are in progress. This support function will include: 1) Review and disposition of Fixed Price contractor submittals, 2) Prepare and issue Engineering Change Notices (ECN's), 3) Disposition Nonconformance Reports (NCR's), 4) Attend construction meeting, 5) Be available to assist construction personnel in resolving technical issues.

Safety (30)

- Provide review for approximately ECNs and approximately NCRs for compliance with appropriate safety codes and standards.

Electrical Engineering (31)

- Review and disposition Fixed Price Contractor submittals.
- Prepare, issue and disposition ECNs.
- Provide disposition to NCRs.
- Prepare Acceptance Test Procedures (ATPs) for the Cathodic Protection System.
- Attend meetings and field trips as required to support construction activities.

Design Administration (35)

- Coordinate interdiscipline activities and provide performance/progress information to support schedule and cost statusing.

Project Management (40)

- Provide overall coordination of all Engineering/Inspection activities.
- Responsible for cost and schedule performance and reporting.

Quality Engineering (42)

- Provide review of ECNs and NCRs for compliance with appropriate criteria and procedures.
- Provide auditing services to verify project work is performed in accordance with appropriate procedures.

Acceptance Inspection (44)

- Provide acceptance inspection services for all project construction.
- Provide weekly inspection reports.
- Prepare NCRs as necessary.
- Conduct acceptance performance testing.

Project Controls (45)

- Sets up and maintains costs and schedule baseline.
- Provides schedule analysis and cost trending.

Cost Estimating (46)

- Provides estimating support during construction as required to support disposition of contractor Change Requests.

Construction Submittals (49)

- Provides contractor submittal control and distribution system to ensure timely disposition of submittals.

Construction Forces Administration (60)

- Responsible for managing and coordinating Construction Forces (CF) activities.

Construction Management (61)

- The Fixed Price Contractor will be managed by KEH Construction Management.

Surveying (62)

- Provide horizonal and vertical control points at site for Fixed Price Constructor use.
- Spot check Fixed price Contractor's layout on critical structures and equipment.

Records Management and Turnover (65)

- Maintains project engineering/management files.
- Transmits project documents internally and externally.
- Responsible for project records turnover at project completion.

As-Builting (66)

- As-built the drawings, specifications and ATPs at the completion of the project.

OPERATING CONTRACTOR STATEMENT OF WORK
PROJECT W-058

I. OBJECTIVES

The operating contractor shall provide daily management of the project including planning, scheduling, coordinating and technical direction, such as that the following objectives are met:

A. Design

Design shall be accomplished by the onsite Architect-Engineer (A-E) according to the cost and schedule shown in appendix C & D.

B. Construction

Construction shall be accomplished by fixed price contractor and the onsite construction contractor according to the cost and schedule shown in appendix C & D.

II. PROJECT MANAGEMENT AND SUPPORT

The operating contractor shall provide management and technical direction and assistance:

- Two and one-half man/years project management support - $250 K
- Two man/years safety and environmental support - $200 K
- Software development to interface with existing MCS system - $150 K

III. PLANT FORCES WORK

Plant forces will provide the following - $160 K

- High/medium voltage interties
- Relay setting and coordination of electrical systems
- Initial decontamination of tie-in diversion boxes

APPENDIX D

Conceptual Project Schedule

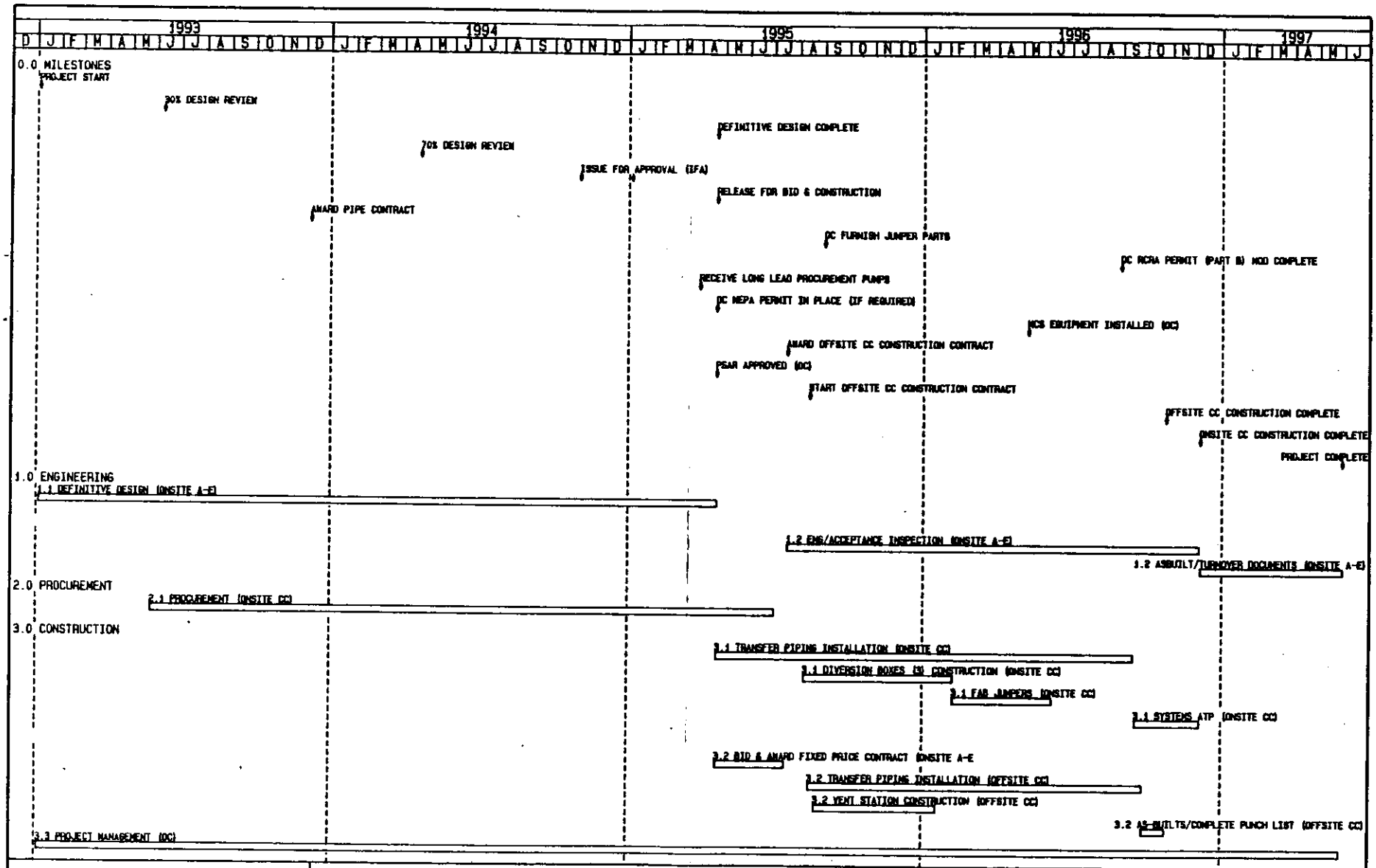

Summary Bar/ Early Dates
Critical Designator

Primavision PC ENGR Cthag.

Project Start : 10CT92
Project Finish: 28MAY97

CROSS SITE TRANSFER SYST REPLACEMENT
W-058 CONCEPTUAL PROJ SCHED / REV 0

Sheet 1 of 1

Data Date: 10CT92
Plot Date: 17APR91

KAISER ENGINEERS HANFORD

Dept	Approval	Date
PM	J.A. Lindquist	4/18/91
PCE	Mark Kurtz	4/18/91
PLE	J.R. Collins	4/23/91
CM	P.A. Beaudet	4/24/91

BEST AVAILABLE COPY

WHC-SD-WM-CDR-001 Rev. 0

APPENDIX E

Outline Specifications

OUTLINE SPECIFICATIONS

DIVISION 2 - SITEWORK

Section 02200 Earthwork

1. Excavation for vent stations and diversion boxes.

2. Trenches for underground piping.

3. Shore excavations deeper than 4 feet, slope greater than 1-1/2 to 1.

4. Backfill

   a. Structural: WSDOT M41-10, Section 2-03.3(14)c, Method B or C.

   b. Common: Compact each layer with 1 pass of vibratory roller.

   c. Bedding for underground pipe or conduit: Excavated sandy material having less than 20 percent gravel particles (by volume) and maximum dimension of 1/2 inch.

5. Finish grading and stabilization of disturbed areas with 2 inch minus gravel or locally available natural grass mixture.

6. Plastic sheet marker for buried pipe and conduit.

7. All earthwork shall be performed in accordance with WSDOT M41-10, Division 2.

Section 02235 Road Subgrade and Granular Base

1. Remove pavement, as required, at pipe crossings.

2. Base Course: WSDOT M41-10, Sections 9-03.9(3) and 4-04.3.

3. Top Course: WSDOT M41-10, Sections 9-03.9(3) and 4-04.3.

4. Backfill: WSDOT M41-10, Section 2-03.3(14)c, Method B.

5. Subgrade: WSDOT M41-10, Section 2-06.3.

6. Compaction Control: WSDOT M41-10, Section 2-03.3(14)d.

Section 02512 Hot-Laid Asphaltic Concrete Paving

1. Asphalt: WSDOT M41-10, Section 9-02.1(4) viscosity grade AR-4000-W.

2. Proportion of Asphalt Concrete Materials: WSDOT M41-10, Section 9-03.8(6), Class B.

3. Construction: WSDOT M41-10, Section 5-04.3.

Section 02831 Chain Link Fences and Gates

1. Fabric: 2 inch diamond mesh of #9 wire gage, Federal specification FS RR-F-191/1.

2. Line Posts: FS RR-F-191/3, pipe section 2.375 inch outside diameter, 3.65 pounds/linear foot or equal strength.

3. End Posts: 2.875 inch outside diameter, 5.79 pounds per linear foot, or equivalent strength.

4. Gate Posts: 4 inch outside diameter, 9.11 pounds per linear foot, or equivalent strength.

5. Extension Arms: FS RR-F-191/4.

6. Tension Wires: FS RR-F-191/4.

7. Barbed Wire: ASTM A 121.

8. Gate frames fabricated from 1.90 inch outside diameter, 2.72 pounds per linear foot, or equivalent strength; braced welded, and hot-dip galvanized.

9. Signs: WAC-173-303-310 (2)(a).

DIVISION 3 - CONCRETE

Section 03300 Cast-in-Place Concrete

1. Concrete, Minimum Compressive Strength: 4,000 psi at 28 days.

2. Reinforcing Steel Bars: ASTM A 615, deformed, Grade 60.

3. Nonshrink grout, nonmetallic type.

4. Concrete Forms: Wood, steel, plywood, or approved equal.

5. All concrete work shall be in accordance with ACI 301 and ACI 349.

Section 03400 Precast Concrete

1. Concrete, Minimum Compressive Strength: 4000 psi at 28 days.

2. Reinforcing Steel Bars: ASTM A 615, deformed, Grade 60.

3. All precast concrete work shall be in accordance with PCI MNL-116 and applicable sections of ACI 301 and ACI 349.

DIVISION 5 - METALS

Section 05500 Metal Fabrications

1. Rolled Steel Shapes and Plates: ASTM A 36.
2. Steel Bars and Rods: ASTM A 36.
3. Steel Tubing: ASTM A 500, Grade B.
4. Bolts: ASTM A 325, Type 1 or 2.
5. Nuts: ASTM A 563, Grade C, heavy hex.
6. Washers: ASTM F 436.
7. Expansion Anchors: Hilti Kwik Bolt II or Hilti HSL or similar.
8. Weld Studs: ASTM A 108, Nelson Stud welding Co, Type H4L or similar.
9. Electrodes for Welding: E 70XX.
10. Fabricate and erect steel in accordance with AISC.
11. Welding: AWS D1.1.
12. Steel Grating: FS RR-G-661, Type I, galvanized carbon steel.
13. Handrail: Pipe, ASTM A 53 welded or seamless, Schedule 40.

Section 05555 Stainless Steel Pit Liner

1. Stainless Steel Plate, Sheet, and Strip: ASTM A 240, Type 304L; No. 4 finish for exposed surfaces in accordance with ASTM A 480.
2. Stainless Steel Bars and Shapes: ASTM A 276, Type 304L.
3. Filler Metal: AWS A5.4 (E 308L-15 or 16) or AWS A5.9 (ER 308L); certified material test report for tests required in applicable material specification of ASME Section II, Part C.

DIVISION 7 - THERMAL AND MOISTURE PROTECTION

Section 07920 Sealants and Calking

1. TBD

DIVISION 9 - FINISHES

Section 09805 Special Protective Coating

1. Ferrous metals inside vent station and diversion boxes:

		Minimum Wet Film Thickness and Percentage of Film Forming Solids per Volume	Minimum Dry Film Thickness
Prime:	Dimetcote Steel Primer 205 or similar	1.4 mils & 35%	0.50 mil
Second:	Amercoat 187 or similar	4.5 mils & 22.0%	1.0 mil
Third:	Amercoat 33 or similar	6.4 mils & 23.46%	1.5 mils
Fourth:	Amercoat 33 or similar	6.4 mils & 23.46%	1.5 mils

Section 09900 Painting

1. Sealer for concrete floors and walls.

2. All exterior and interior ferrous metals (except within vent station and diversion boxes).

	Minimum Dry Film
Ferrous Metal, Enamel, Gloss	
Pretreatment: MS DOD-P-15328	0.5 mil
Prime Coat: FS TT-P-645	1.5 mils
2nd Coat: FS TT-E-489, Class A	1.5 mils
Finish: FS TT-E-489, Class A	1.5 mils

DIVISION 13 - SPECIAL CONSTRUCTION

Section 13440 Instrumentation

1. Multiplexer Systems: Modular, solid-state, and consisting primarily of the following components.

   a. Input/Output multiplexer modules.

   b. Long distance transmitter/receiver modules.

   c. Power supply modules.

   d. Equipment enclosures for diversion boxes and vent station: Rack mounted NEMA 12 enclosures.

e. Equipment enclosures for 242-S and 242-A: Wall mounted NEMA 1 enclosures.

f. Underground cable plant.

2. Annunciator: Bi-alarm units, NEMA 12, 12 high by 20 wide, general purpose cabinet for flush mounting, push button/flasher module, silence/test push buttons, and horn.

3. Area Radiation Monitoring System: Gamma detector assembly suitable for outdoor pole mounting, with local audio/visual high radiation and instrument failure alarms, Form C contact followers for remote high level and failure alarms, a local analog recorder output, and an isolated externally powered 4-20 mA analog output.

4. Hydrogen Monitoring System: Single and multiple channel combustible gas monitor with local and relayed outputs for remote annunciation of 0.25 percent and 0.50 percent Lower Explosive Limit (LEL) points for hydrogen air mixtures at nominal Standard Temperature and Pressure (STP) conditions. Each monitor channel to consist of a diffusion type sensor positional up to 1000 feet from a panel mounted electronic package. The electronic package to provide a 0 to 100% LEL and analog readout, 0.25% LEL alert, 0.50% LEL alarm contact followers for remote alert and alarm outputs, and an isolated externally powered (intrinsically safe) 4-20 mA (0 to 100 percent level) analog output.

5. Leak or Flow Detection System: Thermal dispersion type probe, with remote alarm and trouble annunciation, with local failure signals, adequate to resolve failure mode.

6. Analytic Level Detection System: Extended float type, accuracy and repeatability of 0.0050 feet per 100 feet, capable of local analog readout and level alarm annunciation, and an isolated externally powered 4-20 mA analog output.

7. Programmable Logic Controller (PLC): Modular input/output (I/O), specific I/O to be determined in the definitive design (estimate 96 inputs and 163 outputs), plus 20 percent of the same I/O mix for future expansion; and having relay logic functions to include multiple contact devices, latching devices, fail-safe and nonfail-safe I/O points, count up and count down timers, and pulsed outputs. Outputs rated 120 Vac, 5 A.

8. Instrument Enclosure: One NEMA 4X stainless steel construction, size 74 inch x 72 inch x 12 inch (nominal), preengineered with thermostatically controlled heating/exhaust fan; suitable for mounting hydrogen, leak detection, and temperature alarms and MOV controls at SY tank farm mounted on a concrete pad in accordance with Section 03300.

9. Temperature: Thermocouple sensor Type T, 4-20 mA transmitter, indicator with local high and low alarms and form C alarm follower for instrument enclosure.

10. Pressure: Diaphragm pressure sensor, with flush mounted diaphragm seal, 4-20 mA transmitter, indicator with local high pressure alarm and form C alarm follower.

Note: 1. All instruments must be compatible with applicable environmental and process fluid parameters contained in the Functional Design Criteria. Environmentally controlled instrumentation enclosures shall be provided where necessary to maintain equipment ambient conditions within operational limits. All nonloop powered instruments shall operate from a nominal 115 V 60 Hz primary power source.

2. Special tools, if any are necessary to maintain instrumentation equipment, must be provided with that equipment.

DIVISION 15 - MECHANICAL

Section 15493 Chemical Process Piping Systems

1. Process Encasement Including Risers and Drain: Maximum operating pressure, 600 psig; maximum operating temperature, 200°F.

a. Safety class: 2.

b. Code compliance: ASME B31.3, normal service.

c. Size: 2 inches to 6 inches.

d. Pipe: Carbon steel, ASTM A 106, Grade B, seamless.

e. Wall thickness: Schedule 40.

f. Bends: 36 inch radius, 90° bends.

g. Fittings: Wrought steel, ASTM A 234, Grade WPB, buttweld per ANSI B16.9, wall thickness to match pipe.

h. Flanges: 300 lb forged carbon steel, ASTM A 105.

i. Valves: Class 300, carbon steel, 2-way and 3-way metal seated ball valves. Seat leakage criteria per ANSI B16.104, Class II.

j. NDE: Minimum 5 percent random in-process. 100 percent in-process on final clamshell welds.

k. Cleaning: None.

l. Testing: Hydrostatic test at 900 psig.

m. Insulation: Loose fill similar to Gilsulate 500 for straight runs. Flexible liner and rigid polyurethane for bends.

n. Documentation: Certified material test reports are required for all piping, fittings, and welding filler metal.

2. Process Transfer and Process Jumpers: Maximum operating pressure, 600 psig; maximum operating temperature, 200°F.

a. Safety class: 2.

b. Code compliance: ASME B31.3, normal service.

c. Sizes: 3 inch.

d. Pipe: Stainless steel, ASTM A 312, Grade TP 304 L, seamless.

e. Wall thickness: Schedule 40S.

f. Bends: 36 inch radius, 90° bends.

g. Fittings: Stainless steel, ASTM A 403, Class WP 304L, buttweld per ANSI B16.9, wall thickness to match pipe.

h. Flanges: None.

i. Valves: Class 300, stainless steel, 2-way and 3-way metal seated ball valves. Seat leakage in accordance with ANSI B16.104, Class V. Actuators, 120 Vac, electric motor, explosion proof, radiation hardened with position indication instrumentation.

j. NDE: 100 percent radiograph.

k. Cleaning: Water flush.

l. Testing: Hydrostatic test at 900 psig.

m. Insulation: None.

n. Documentation: Certified material test reports are required for all piping, fittings, and welding filler metal.

3. Process Vent and Encasement: Maximum operating pressure, 15 psig; maximum operating temperature, 100°F.

a. Safety class: 2.

b. Code compliance: ASME B31.3, normal service.

c. Sizes: 3 - 6 inch.

d. Pipe: Carbon steel, ASTM A 106, Grade B.

e. Wall thickness: Schedule 40.

f. Bends: 36 inch radius, 90° bends.

g. Fittings: Wrought steel, ASTM A 234, Grade WPB, buttweld per ANSI B16.9, wall thickness to match pipe.

h. Flanges: 150 lb carbon steel, ASTM A 105.

i. Valves: Class 150, carbon steel, 2-way ball valves with TFE seats and seals.

j. NDE: 5 percent random radiography for the vent and 5 percent random in-process for the encasement.

k. Cleaning: Water flush of vent line only.

l. Testing: Pneumatic test at 17 psig.

m. Insulation: None.

n. Documentation: Certified material test reports are required for all piping, fittings, and welding filler metal.

4. Water Spray: Maximum operating pressure, 100 psig; maximum operating temperature, 150°F.

a. Safety class: 3.

b. Code compliance: ASME B31.3, Category D.

c. Sizes: 1/2 inch to 1 inch.

d. Pipe: Stainless steel, ASTM A 312, Grade TP 304L.

e. Wall thickness: Schedule 40S.

f. Fittings: Forged stainless steel, ASTM A 182, F 304L, socket weld.

g. Flanges: None.

h. Valves: Class 150, stainless steel, 2-way ball valve, with TFE seats and seals.

i. Spray nozzles: Stainless steel fulljet.

j. NDE: Visual.

k. Cleaning: Water flush.

n. Documentation: Certified material test reports are required for all piping, fittings, and welding filler metal.

5. Drains: Maximum operating pressure, 15 psig; maximum operating temperature 200°F.

a. Safety class: 2.

b. Code compliance: ASME B31.3, normal service.

c. Sizes: 3 inch.

d. Pipe: Polypropylene, ASTM D 2146.

e. Wall thickness: 0.323 inches.

f. Fittings: Polypropylene, butt-fusion joints, wall thickness to match pipe.

g. Flanges: None.

h. Valves: None.

i. NDE: Visual.

j. Cleaning: Water flush.

k. Testing: Hydrostatic test at 23 psig.

l. Insulation: None.

m. Documentation: Certificate of conformance in materials for all piping and fittings.

6. Diversion Box Vent: Maximum operating pressure, 15 psig; maximum operating temperature, 100°F.

a. Safety class: 2.

b. Code compliance: ASME B31.3, category D.

c. Sizes: 1/2 inch to 8 inch.

d. Pipe: Carbon steel, ASTM A 106, Grade B.

e. Wall thickness: Schedule 40.

f. 277VFittings: Forged steel, ASTM A 105, socket weld for 1/2 inch sizes. Wrought steel, ASTM A 234, Grade WPB, buttweld per ANSI B16.9, wall thickness to match pipe for 8 inch sizes.

g. Flanges: 150 lb carbon steel, ASTM A 105.

h. Valves: Class 150, carbon steel, 2-way ball valves with TFE seats and seal. Class 150, carbon steel, wafer style butterfly valve with BUNA-N seats.

i. NDE: Visual.

j. Cleaning: None.

k. Testing: Hydrostatic test at 23 psig.

l. Insulation: None.

m. Documentation: Certified material test reports are required for all piping, fittings, and welding filler metal.

DIVISION 16 - ELECTRICAL

Section 16300 High Voltage Distribution (Above 600 V)

1. Conductor: Bare, aluminum cable steel reinforced (ACSR) #4 AWG.

2. Poles: Western red cedar, ANSI 5.1, butt treated AWPA C7, class 3, length 45′, 9"-2" standard crossarms.

3. Fused Cutout: 15 kV, 200 amp.

4. Lightning Arrester: Metal oxide type, 15 kV.

5. Pole Mounted Transformer: 13.8 kV-277 V, 167 kVA, single-phase, with full capacity taps.

Section 16400 Service and Distribution (600 V and below)

1. Panelboard: NEMA 4x enclosure, 120/240 Vac, single phase, 100 A frame with main lugs only, 20 circuit.

2. Main Disconnect Switches:

   a. NEMA 4x enclosure, 600 Vac, 400 A, 3-pole, 4-wire.

   b. NEMA 4x enclosure, 240 Vac, 100 A, 2-pole, 3-wire.

3. Conductors:

   a. Power/control wiring: Copper, 600 V, THWN/THHN insulation.

   b. Signal cable: 2 conductor shielded, 300 V, #18 AWG, direct buried.

Section 16640 Cathodic Protection

1. Rectifier: Outdoor, oil-immersed, 480 Vac, three-phase input, suitable for pad mounting.

a. Step-down transformer: Separate primary and secondary windings, fully rated for maximum capacity, adjustable taps.

b. Stack: Full-wave bridge circuit, rated for 480 Vac, three-phase 60 Hz input.

c. Provide panel for output terminals, circuit breakers, shunts, and meters.

2. Anodes: Durichlor 51, type D, or similar; 2 inch by 60 inch, #8 AWG lead wire, HMW/PE insulation, prepackaged in 8 inch by 96 inch steel canister with coke breeze backfill.

3. Permanent Reference Electrode: Copper-copper sulphate, Matcor No. PRC-CU4 or similar; 20 feet of #8 AWG copper wire; type HMW/PE insulation.

4. Conductors

a. #8 AWG, 7-strand copper cable; HMW/PE insulation.

b. #6 AWG, stranded copper wire; type HMW/PE insulation.

c. #12 AWG, stranded copper wire; type THWN insulation.

d. #2/0 AWG, 7-strand copper cable; HMW/PE insulation.

5. Test Station Enclosure and Anode Junction Box Enclosure: Quazite Corp. style "PG" model No. PG1324BA18 or similar; with steel locking cover.

6. Test Station and Anode Junction Box: Single-hub double box, slip-fit for 3 inch rigid PVC conduit. Provide 14, 3/8 inch silicon bronze terminal lugs with nuts and washers. Gerome, Catalog No. 2007 or similar.

APPENDIX F

Energy Conservation Report and Analysis

This project is not expected to have any building or building addition where total energy consumption is expected to exceed 500 MBtu per year.

APPENDIX G

Preliminary Safety Evaluation

(Issued by Westinghouse Hanford Company under Document No. WHC-SD-W058-PSE-001 Rev. 0 on Engineering Data Transmittal No. 126424)

APPENDIX H

Life Cycle Cost Analysis

A Life Cycle Cost Analysis was not used on this project. The pipeline vent system chosen for this project is the most desirable with the least amount of operating equipment in remote sites. This system was chosen over the other alternatives considered.

APPENDIX I

Instrumentation Identification

TABLE 1

INSTRUMENTATION IDENTIFICATION

AAH	High-Analysis Alarm
AT	Analysis Transmitter
AIS	Analysis Indicator Switch
FI	Flow Indicator
FS	Flow Switch
HS	Hand (Manual) Switch
HV	Hand (Manual) Valve
II	Current Indicator
IT	Current Transmitter
LDA	Leak Detection Alarm
LDE	Leak Detection Element
LE	Level Element
PI	Pressure Indicator
PT	Pressure Transmitter
RAH	Radiation Alarm High
RE	Radiation Element
TAH	High-Temperature Alarm
TAL	Low-Temperature Alarm
TE	Temperature Element
YL	Event Light
ZL	Position Light

ABBREVIATIONS

(Abbreviations are per ANSI Y1.1-1972 unless otherwise noted below)

CASS	Computer Automated Surveillance System
DIV	Diversion
HW	Hardwired
MSC	Master Shutdown Circuit
MCC	Motor Control Center
MOV	Motor Operated Valve
TBD	To be determined
MUX	Multiplexer System
242-A	Bldg 242-A Control Room
242-S	Bldg 242-S Control Room

TABLE 1 (Continued)

INSTRUMENTATION IDENTIFICATION

FIELD INSTRUMENT (Location)	SIGNAL	CONTROL/DISPLAY (Location)	PATH	INTERLOCK PUMP	INTERLOCK MSC	CASS	REMARKS
(241-SY-A)							
AT	Anal, hydrogen xmtr	AIS/AAH (242-S/lcl)	HW	No	No	Note 11	
HV	3 Posn MOV, posn cont/dspl	HS/ZL (242-S/lcl)	HW	No	No	No	
HV	3 Posn MOV, posn cont/dspl	HS/ZL (242-S/lcl)	HW	No	No	No	
HV	3 Posn MOV, posn cont/dspl	HS/ZL (242-S/lcl)	HW	No	No	No	
LDE	Leak, xfr line encs lp	LDA (242-S/lcl)	HW	Note 2		Note 6	
TE	Temp, instm ambient	TAL/TAH (242-S/lcl)	HW	No	No	Note 10	Note 13
(241-SY-B)							
AT	Anal, hydrogen xmtr	AIS/AAH (242-S/lcl)	HW	No	No	Note 11	
HV	3 Posn MOV, posn cont/dspl	HS/ZL (242-S/lcl)	HW	No	No	No	
LDE	Leak, xfr line encs lp	LDA (242-S/lcl)	HW	Note 2		Note 6	
(DIV BOX NO. 1)							
AT	Anal, hydrogen xmtr	AIS/AAH (242-S/lcl)	MUX 1	Yes	No	Note 11	
HV	3 Posn MOV, posn cont/dspl	HS/ZL (242-S/lcl)	MUX 1	No	No	No	
HV	3 Posn MOV, posn cont/dspl	HS/ZL (242-S/lcl)	MUX 1	No	No	No	
LDE	Leak, dr high level	LDA (242-S/lcl)	MUX 1	Note 2		Note 7	
LDE	Leak, xfr line encs lp line 1	LDA (242-S/lcl)	MUX 1	Note 2		Note 6	
LDE	Leak, xfr line encs lp line 2	LDA (242-S/lcl)	MUX 1	Note 2		Note 6	
TE	Temp, instm ambient	TAL/TAH (242-S/lcl)	MUX 1	No	No	Note 10	Note 4
Bstr Pmp Instm	See Note 5	(242-S/lcl)	MUX 2	Yes	No		Notes 2,3

TABLE 1 (Continued)

INSTRUMENTATION IDENTIFICATION

FIELD INSTRUMENT (Location)	SIGNAL	CONTROL/DISPLAY (Location)	PATH	INTERLOCK PUMP	INTERLOCK MSC	CASS	REMARKS
(VENT STATION)							
AT	Anal, hydrogen xmtr	AIS/AAH (242-S/lcl)	MUX 1	Yes	No	Note 11	
AT	Anal, hydrogen xmtr	AIS/AAH (242-S/lcl)	MUX 1	Yes	No	Note 11	
FS	Flow, vent to catch tk	FI (242-S/lcl)	MUX 1	No	No	Note 9	
HS	Catch tk pmp, cont hd-off-auto	HS (242-S/lcl)	MUX 1	No	No	No	
HS	Sump pmp, cont hd-off-auto	HS (242-S/lcl)	MUX 1	No	No	No	Note 14
HV	3 Posn MOV, posn cont/dspl	HS/ZL (242-S/lcl)	MUX 1	No	No	No	
HV	3 Posn MOV, posn cont/dspl	HS/ZL (242-S/lcl)	MUX 1	No	No	No	
HV	3 Posn MOV, posn cont/dspl	HS/ZL (242-S/lcl)	MUX 1	No	No	No	
HV	2 Posn MOV, posn cont/dspl	HS/ZL (242-S/lcl)	MUX 1	No	No	No	
IT	Ind, mot cur, sump pmp	II (242-S/lcl)	MUX 1	No	No	Note 8	
IT	Ind, mot cur, catch tk pmp	II (242-S/lcl)	MUX 1	No	No	Note 9	
LDE	Leak, sump high level	LDA (242-S/lcl)	MUX 1	Yes	No	Note 8	
LE	Level, catch tk liquid	LDA (242-S/lcl)	MUX 1	No	No	Note 9	
MCC	Catch tk pmp confirm on	YL (242-S/lcl)	MUX 1	NA	No	Note 9	
MCC	Sump pmp confirm on	YL (242-S/lcl)	MUX 1	NA	No	Note 8	
PT	Press, catch tk vent line	PI (242-S/lcl)	MUX 1	No	No	Note 9	
RE	Radn, area high	RAH (242-S/lcl)	MUX 1	Yes	No	Note 1	
TE	Temp, instm ambient	TAL/TAH (242-S/lcl)	MUX 1	No	No	Note 10	Note 4
Bstr Pmp Instm	See Note 5	(242-S/lcl)	MUX 2	Yes	No	No	Notes 2,3

TABLE 1 (Continued)

INSTRUMENTATION IDENTIFICATION

	SIGNAL	CONTROL/DISPLAY (Location)	PATH	INTERLOCK PUMP	INTERLOCK MSC	CASS	REMARKS
(DIV BOX NO. 2)							
AT	Anal, hydrogen xmtr	AIS/AAH (242-S/lcl)	MUX 4	No	No	Note 11	
		AIS/AAH (242-A)	MUX 3	No	No		
HV	3 Posn MOV, posn cont/dspl	HS/ZL (242-S/lcl)	MUX 4	No	No	No	
		HS/ZL (242-A)	MUX 3	No	No		
HV	3 Posn MOV, posn cont/dspl	HS/ZL (242-S/lcl)	MUX 4	No	No	No	
		HS/ZL (242-A)	MUX 3	No	No		
LDE	Leak, dr high level	LDA (242-S/lcl)	MUX 4	Yes	No	Note 7	
		LDA (242-A)	MUX 3	Yes	Note 2		
LDE	Leak, xfr line encs lp line 1	LDA (242-S/lcl)	MUX 4	Yes	No	Note 6	
		LDA (242-A)	MUX 3	Yes	Note 2		
LDE	Leak, xfr line encs lp line 2	LDA (242-S/lcl)	MUX 4	Yes	No	Note 6	
		LDA (242-A)	MUX 3	Yes	Note 2		
LE	Level, 221-B TBD catch tk	LDA (242-S/lcl)	MUX 4	Yes	No		Note 12,15
		LDA (242-A)	MUX 3	Yes	No		
TE	Temp, instm ambient	TAL/TAH (242-S/lcl)	MUX 4	No	No	Note 10	Note 4
		TAL/TAH (242-A)	MUX 3	No	No		
Bstr Pmp Instm	See Note 5	(242-S/lcl)	MUX 2	Yes	No	No	Notes 2,3
(DIV BOX NO. 3)							
AT	Anal, hydrogen xmtr	AIS/AAH (242-S/lcl)	MUX 1	No	No	Note 11	
		AIS/AAH (242-A)	MUX 3	No	No		
HV	3 Posn MOV, posn cont/dspl	HS/ZL (242-S/lcl)	MUX 1	No	No	No	
		HS/ZL (242-A)	MUX 3	No	No		
HV	3 Posn MOV, posn cont/dspl	HS/ZL (242-S/lcl)	MUX 1	No	No	No	
		HS/ZL (242-A)	MUX 3	No	No		
LDE	Leak, dr high level	LDA (242-S/lcl)	MUX 1	Yes	No	Note 8	
		LDA (242-A)	MUX 3	Yes	Note 2		
LDE	Leak, xfr line encs lp line 1	LDA (242-S/lcl)	MUX 1	Yes	No	Note 6	
		LDA (242-A)	MUX 3	Yes	Note 2		
LDE	Leak, xfr line encs lp line 2	LDA (242-S/lcl)	MUX 1	Yes	No	Note 6	
		LDA (242-A)	MUX 3	Yes	Note 2		

TABLE 1 (Continued)

FIELD INSTRUMENT (Location)	SIGNAL	CONTROL/DISPLAY (Location)	PATH	INTERLOCK PUMP	INTERLOCK MSC	CASS	REMARKS
(244-A)							
AT	Anal, hydrogen xmtr	AIS/AAH (242-S/lcl)	MUX 1	No	No	Note 11	
		AIS/AAH (242-A)	MUX 3	No	No		
HV	3 Posn MOV, posn cont/dspl	HS/ZL (242-S/lcl)	MUX 1	No	No	No	
		HS/ZL (242-A)	MUX 3	No	No		
HV	3 Posn MOV, posn cont/dspl	HS/ZL (242-S/lcl)	MUX 1	No	No	No	
		HS/ZL (242-A)	MUX 3	No	No		
LDE	Leak, dr high level	LDA (242-S/lcl)	MUX 1	Yes	No	Note 8	
		LDA (242-A)	MUX 3	Yes	Note 2		
LDE	Leak, xfr line encs lp line 1	LDA (242-S/lcl)	MUX 1	Yes	No	Note 6	
		LDA (242-A)	MUX 3	Yes	Note 2		
LDE	Leak, xfr line encs lp line 2	LDA (242-S/lcl)	MUX 1	Yes	No	Note 6	
		LDA (242-A)	MUX 3	Yes	Note 2		
LDE	Leak, Vent sta dr line encs	LDA (242-S/lcl)	MUX 1	Yes	No	Note 7	
		LDA (242-A)	MUX 3	Yes	Note 2		
TE	Temp, instm ambient	TAL/TAH (242-S/lcl)	MUX 1	No	No	Note 10	
		TAL/TAH (242-A)	MUX 3	No	No		

Note:
1. Vent Station Area Radiation Monitor - High Radiation or Instrument Failure.
2. Operator selectable, xfr route specific.
3. As required by definitive design.
4. May be included as part of Booster Pump package as determined by definitive design.
5. Instrumentation and control for local and remote operation of Booster Pump. As defined by definitive design. Estimate between 16 and 32 input/output signals per booster pump.
6. Common transfer line encasement alarm/trouble.
7. Common drain line encasement alarm/trouble.
8. Common box drain or sump alarm/trouble.
9. Common catch tank alarm/trouble.
10. Common enclosure temperature high/low alarm/trouble.
11. Common hydrogen alarm/trouble.
12. This measurement is included pending selection of a collection point for Diversion Box 2. Not shown on drawing ES-058-M12.
13. Applies to instrumentation enclosure common to 241-SY-B.
14. As provided by sump pump vendor.
15. If required for tank without existing level measurement.

APPENDIX J

Physically Handicapped Assessment

(Furnished by Westinghouse Hanford Company)

RECORD KEEPING/DOCUMENTATION ON ACCOMMODATIONS OF PHYSICALLY HANDICAPPED IN THE DESIGN, CONSTRUCTION OR ALTERATION OF BUILDINGS AND FACILITIES

PROJECT: W-058 TITLE Cross Site Waste Transfer Lines

LOCATION: AREA 200E BUILDING NO. & NAME 241-SY Tank Farm, 244-A Catch Station

TYPE OF PROJECT

- [X] NEW BUILDING (OR BUILDING ADDITION)
- [ ] BUILDING ALTERATION
- [ ] LEASED BUILDING
- [ ] BUILDING FINANCED IN WHOLE OR IN PART BY FEDERAL GRANT OR LOAN
- [ ] SITE DEVELOPMENT (GRADING, WALKS, PARKING LOTS)

APPLICATION OF STANDARDS

- [ ] ANSI A117.1(R 1971) STANDARDS ARE APPLICABLE TO AND HAVE BEEN OR WILL BE INCORPORATED IN THE DESIGN, CONSTRUCTION, OR ALTERATION.
  - [ ] ALL STANDARDS
  - [ ] LIMITED APPLICATION (REMARKS ON STANDARDS TO BE INCORPORATED):

EXCEPTIONS

- [ ] THE PROJECT IS WITHIN ONE (OR MORE) OF THE EXCEPTIONS SET OUT IN FPMR SUBPART 101-19.604 AS SHOWN BELOW:
  - [X] EXCEPTION (a) NOT INTENDED FOR OCCUPANCY OR USED BY THE HANDICAPPED
  - [ ] EXCEPTION (b) ALTERATION NOT INVOLVING EXISTING STAIRS, DOORS, ELEVATORS, TOILETS, ETC.
  - [ ] EXCEPTION (c) NOT STRUCTURALLY POSSIBLE

GENERAL COMMENTS Tank Farm facilities are not intended to be occupied by physically handicapped personnel. A handicapped individual could be hindered from an expeditious evacuation if an unexpected life-threatening event were to occur.

PREPARED BY J. M. Light DATE

APPROVED BY R. L. Fritz DATE

REFERENCES:

FPMR SUBPART 101-19.6, (AMENDMENT 0-47, JUNE 1974) "ACCOMMODATIONS FOR THE PHYSICALLY HANDICAPPED."

ANSI 117.1(R1971), "AMERICAN STANDARD SPECIFICATIONS FOR MAKING BUILDINGS AND FACILITIES ACCESSIBLE TO AND USABLE BY THE PHYSICALLY HANDICAPPED."

BEST AVAILABLE COPY

APPENDIX K

Plant Forces Work Review

(Furnished by Westinghouse Hanford Company)

Westinghouse Hanford Company
P. O. Box 1970 Richland, Wa 99352

PLANT FORCES WORK REVIEW

Plant Forces Work Review No.	Date
WHC-239-90	10/18/90

Title	Project Work Order or A.R. No.	Area	Bldg. No.
PROJECT W-058, REPLACEMENT OF CROSS-SITE TRANSFER SYSTEM	W-058	200E	N/A

REQUESTER FILL IN

Description of Work: Describe the work to be performed. Discuss all programmatic or physically associated work planned, underway, or recently completed in the work area. Include labor costs and crafts involved other than Westinghouse forces. Describe and estimate the cost of any work on foundations, structures, or utility systems.

Project W-058, "Replacement of Cross-Site Transfer System," will provide a long term replacement piping system for the existing cross-site transfer system. The piping system will connect the 241-SY-A and B valve boxes to the 244-A lift station. The project will feature two parallel pipelines, remote leak detection, three diversion boxes, vent station(s), and capability for future lift stations.

Main components of the project are:

Piping: Approximately six and one-half miles of carbon steel schedule 40, approximately 3" I.D. 6 in. O.D. pipe in pipe will be installed. The piping will be seismic category 2. Cathodic protection may be required.

Leak Detection: The leak detection will be fail-safe, interlocked to shut down pumps upon a leak or upon a leak instrumentation failure. Leak detection will be a low points of the piping, diversion boxes, and vent stations.

Estimated Cost of Work:

*1.	Procured Equipment	$ 240,000
*2.	Materials or Equipment Purchased for Shop Fabrication	$ 0
*3.	Job-Site Material	$ 8,000,000
4.	Shop Labor	$ 0
5.	Job-Site Labor	$ 14,000,000
6.	Other Costs (design, field inspection, and contingency allowance)	$ 23,300,000
7.	General Overhead	$ 1,500,000
	Total Job	$ 47,040,000

*Include estimated fair value of material or equipment acquired on site

Requester's Name/Signature J. M. Light E3-01 Date 10/19/90

WHC

Based on careful consideration of all aspects of the work as described above, the work is determined to be subject to the following treatment under the Davis-Bacon Act.

Covered	Non-covered		
☐	☐	Area Work Review Agent	Date
☐	☐	Company Work Review Agent	Date 11/1/90
☐	☐	General Counsel's Office	Date

DOE

The work specified above has been reviewed and is ~~approved~~ for assignment to plant forces.

Chairman
Labor Standards Board DISAPPROVED Date 11/9/90

A-6400-018 (10/89)

Description of Work (Continued)

Diversion Boxes: The diversion boxes will be stainless steel-lined concrete diversion boxes with drains or catch tanks. The diversion boxes are primary containment and will be seismic category 2.

Vent Station: The vent station will be at the high point of the line. It will be seismic category 2.

Excavation/Installation: Installation of the piping will be a depth of approximately six feet. The line is planned to be through noncontaminated ground.

APPENDIX L

Sketches

Figure 1	Instrumentation/Signal Block Diagram
ES-058-C1	Civil Site Plan and Drawing List
ES-058-S1	Structural Vent Station
ES-058-S2	Structural Diversion Boxes 1, 2, and 3
ES-058-N1	Electrical Site Plan
ES-058-M10	Piping EFD Cross Site XFR Sys
ES-058-M11	Piping EFD Cross Site XFR Sys
ES-058-M12	Piping EFD Cross Site XFR Sys
ES-058-M13	Piping Plan 200 West
ES-058-M14	Piping Plan Cross Site Transfer Sys
ES-058-M15	Piping Plan Cross Site Transfer Sys
ES-058-M16	Piping Plan E
ES-058-M17	Jumper Arrangement Vent Station
ES-058-M18	Piping Hydraulic Diagram
ES-058-M19	Piping Hydraulic Diagram

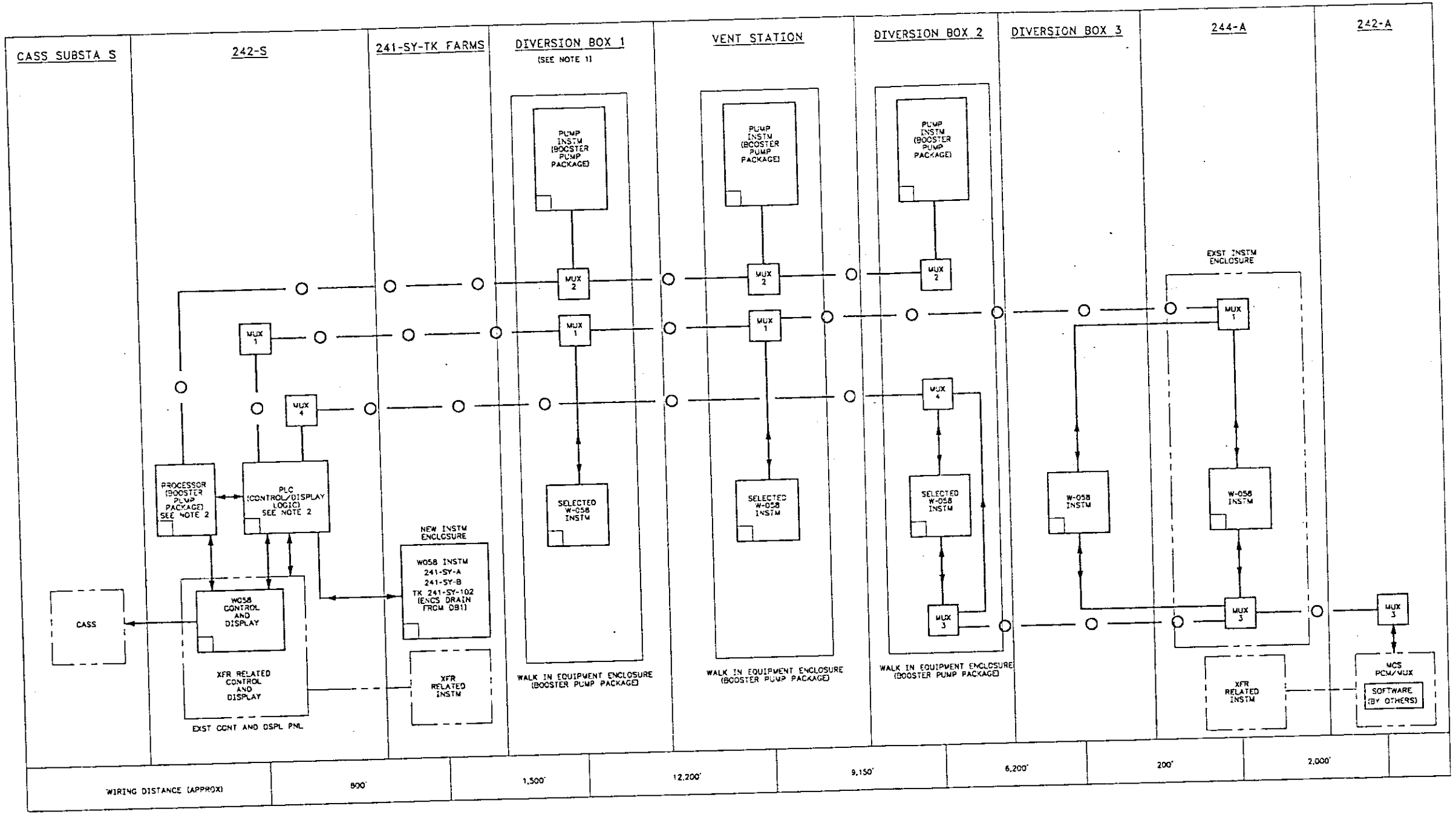

LEGEND

ELECTRICAL POWER

NEW INSTRUMENTATION, EQUIPMENT OR WIRING

EXISTING INSTRUMENTATION OR EQUIPMENT

DATA OR COMMUNICATIONS LINK

ABBREVIATIONS

(ABBREVIATIONS ARE PER ANSI Y1.1-1972 UNLESS OTHERWISE NOTED BELOW)

CASS - COMPUTER AUTOMATED SURVEILLANCE SYSTEM
MUX - MULTIPLEXOR LINE
PC - PERSONAL COMPUTER
PLC - PROGRAMMABLE LOGIC CONTROLLER
MCS - MONITOR AND CONTROL SYSTEM
DB - DIVERSION BOX
HS - HAND SWITCH
PCM - PROCESS CONTROL MODULE

NOTES

1. PREFERRED MUX ARRANGEMENT. MOVE DB 1 INSTM TO MUX 2 PENDING MUX CAPACITY AND LOADING DEFINED IN DEFINITIVE DESIGN.
2. SEPARATELY PACKAGED. LOCATE IN AMU PENDING DEFINITIVE DESIGN.

INSTRUMENTATION/SIGNAL BLOCK DIAGRAM

FIGURE 1

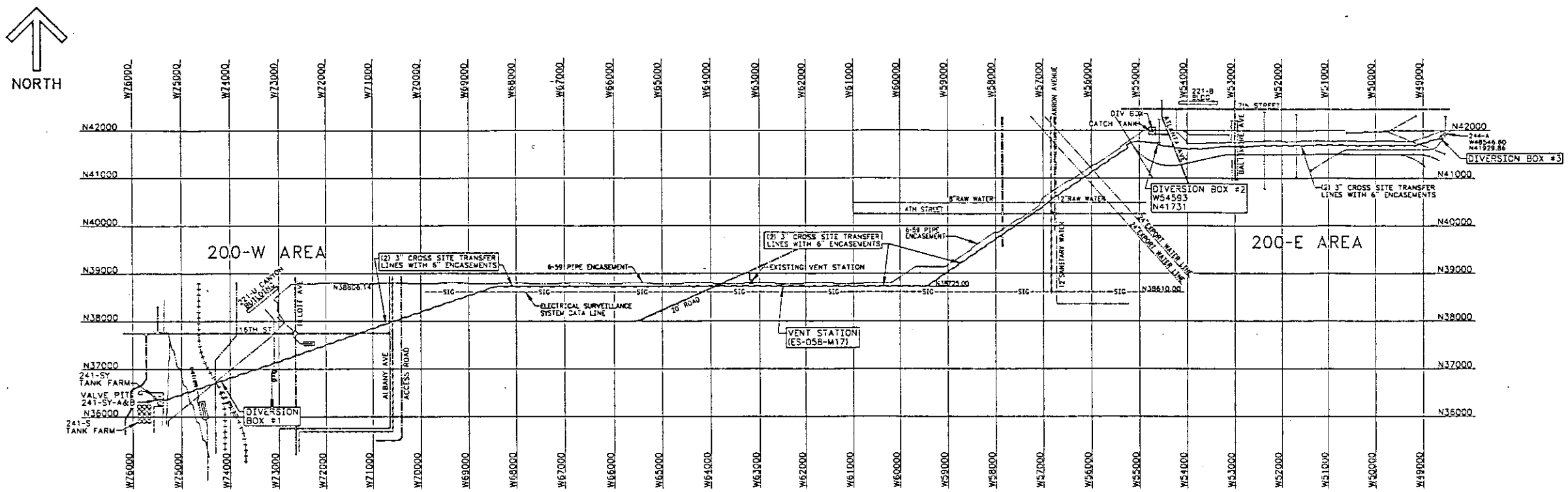

SITE PLAN
SCALE 1"=1000

DRAWING LIST

CIVIL

DWG NUMBER	INDEX	TITLE
ES-058-C1	0110	SITE PLAN & DWG LIST

STRUCTURAL

DWG NUMBER	INDEX	TITLE
ES-058-S1	0900, 0901	VENT STATION
ES-058-S2	0900, 0901	DIVERSION BOXES #1, 2, & 3

ELECTRICAL

DWG NUMBER	INDEX	TITLE
ES-058-N1	8001	ELECTRICAL SITE PLAN

PIPING

DWG NUMBER	INDEX	TITLE
ES-058-M10	7001	EFD CROSS SITE XFR SYSTEM
ES-058-M11	7001	EFD CROSS SITE XFR SYSTEM
ES-058-M12	7001	EFD CROSS SITE XFR SYSTEM
ES-058-M13	0403	PLAN 200 WEST
ES-058-M14	0403	PLAN CROSS SITE TRANSFER SYSTEM 200 EAST TO 200 WEST
ES-058-M15	0403	PLAN CROSS SITE TRANSFER SYSTEM 200 EAST TO 200 WEST
ES-058-M16	0403	PLAN 200 EAST
ES-058-M17	8404	JUMPER ARRANGEMENT VENT STATION
ES-058-M18	8512	HYDRAULIC DIAGRAM
ES-058-M19	8512	HYDRAULIC DIAGRAM

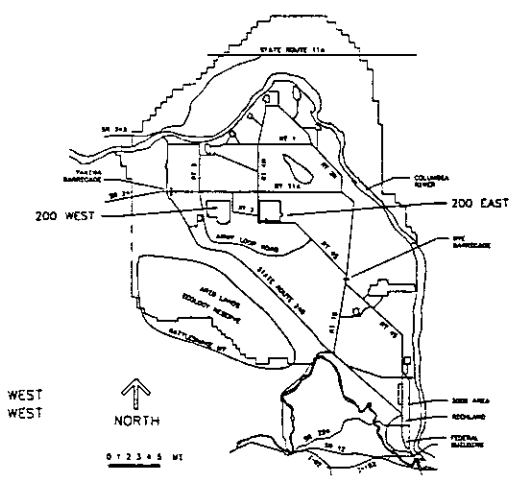

HANFORD AREA MAP

DOES NOT CONTAIN CLASSIFIED OR UNCLASSIFIED CONTROLLED NUCLEAR INFORMATION

Reviewing Official/ADC
Kaiser Engineers Hanford Company

Date

CONCEPTUAL

IMPACT LEVEL	CDT
DRAWN	RC CROSKREY
CHECKED	
SAFETY	
CWSER	
QE	
CAL ENG APPR	
APPROVED FOR IMPLEMENTATION	

U.S. DEPARTMENT OF ENERGY
RICHLAND OPERATIONS OFFICE
KAISER ENGINEERS HANFORD COMPANY

CIVIL
SITE PLAN & DWG LIST

PROJECT W-058 REPL OF CROSS SITE XFR SYSTEM

SIZE	BLDG NO / TRACK NO	DWG NO	REV NO
F	200E/200W 0110	ES-058-C1	0

SCALE SHOWN | JOB NO ERT004 | SHEET 1 OF 1

NUMBER	TITLE
DRAWING TRACEABILITY LIST	

NUMBER	TITLE
NEXT USED ON	REFERENCES

REV NO	DESCRIPTION	DATE	VEM APPROVALS	APPD FOR IMPLEMENTATION FOR DATE
REVISIONS				

CAD FILE | CAD CODE

L-2

KEHCAD

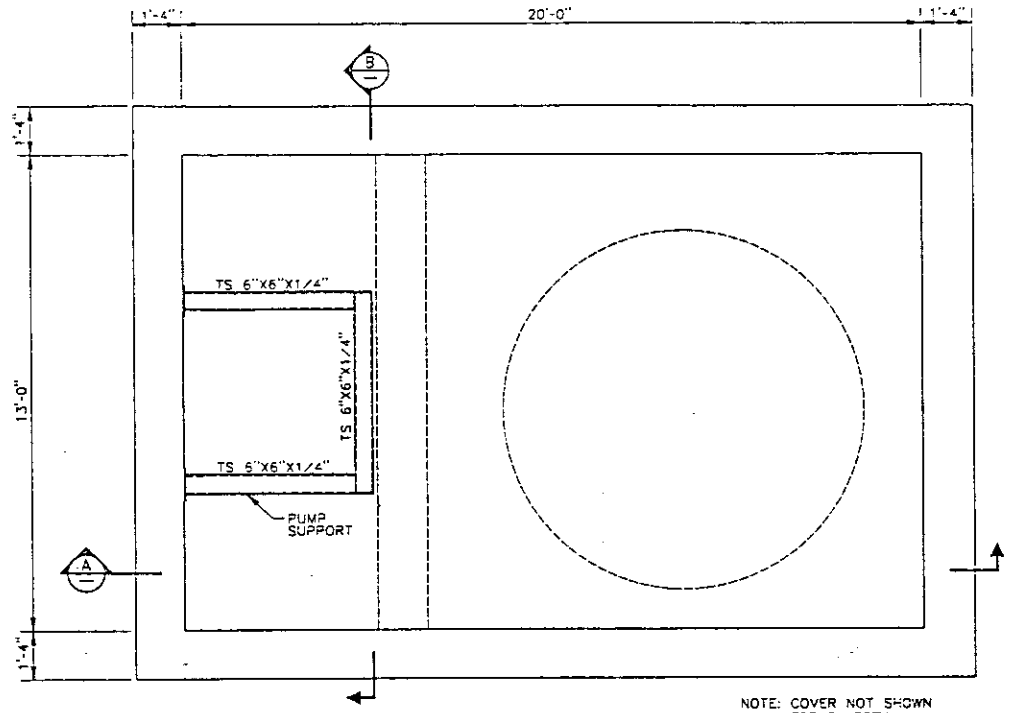

PLAN
SCALE 1/2"=1'-0"

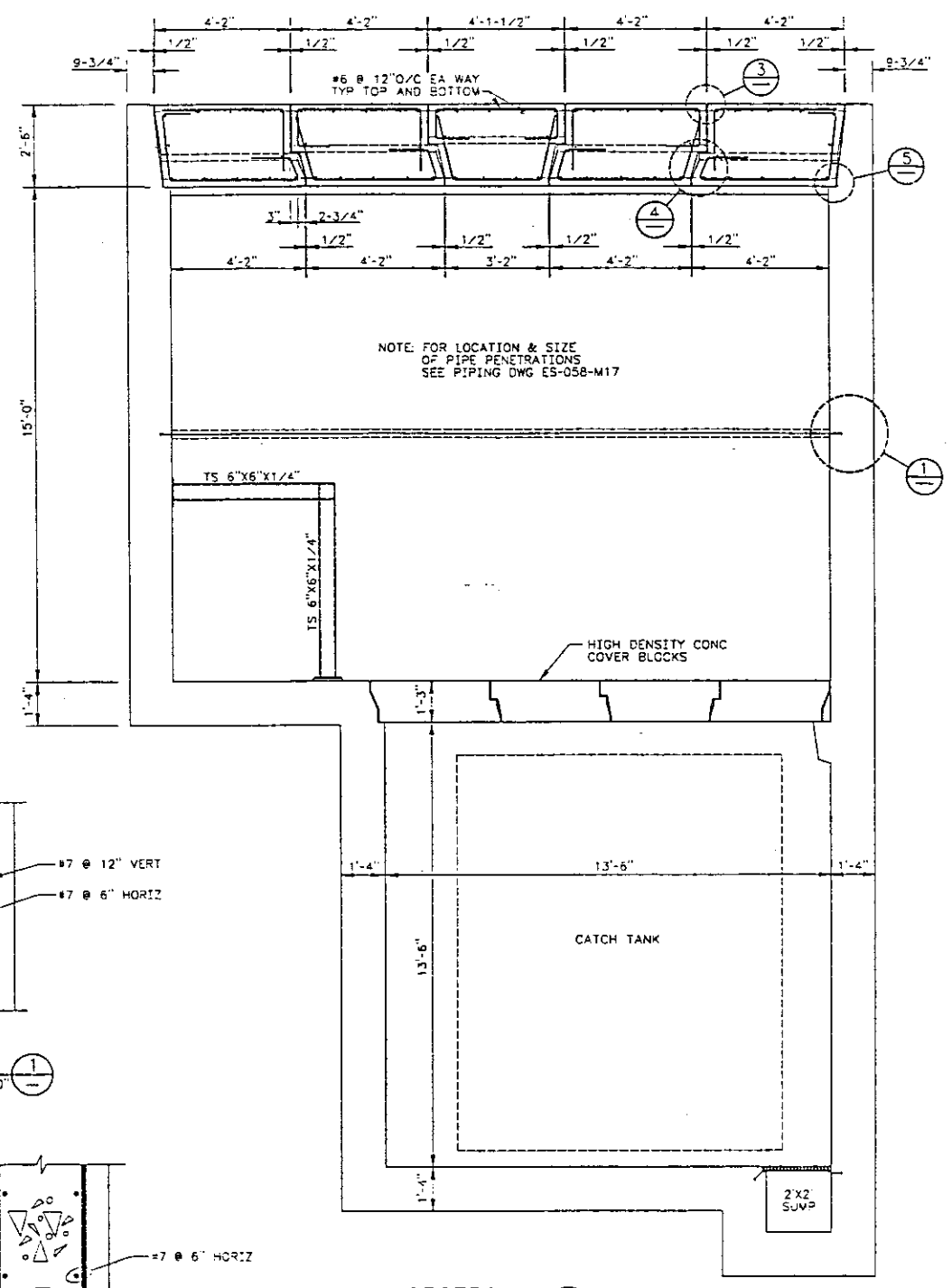

SECTION
SCALE: 1/2"=1'-0"

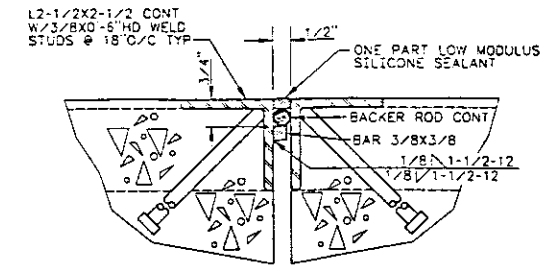

DETAIL
SCALE: 6"=1'-0"

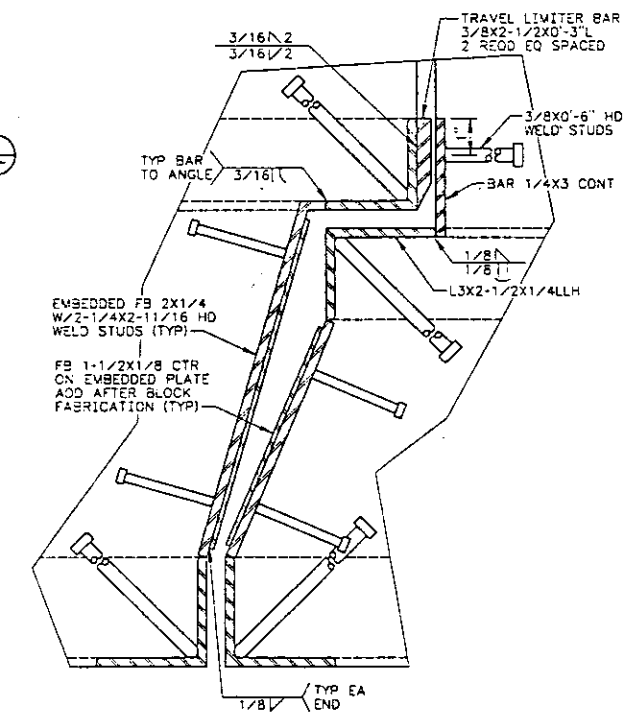

DETAIL
SCALE: 6"=1'-0"

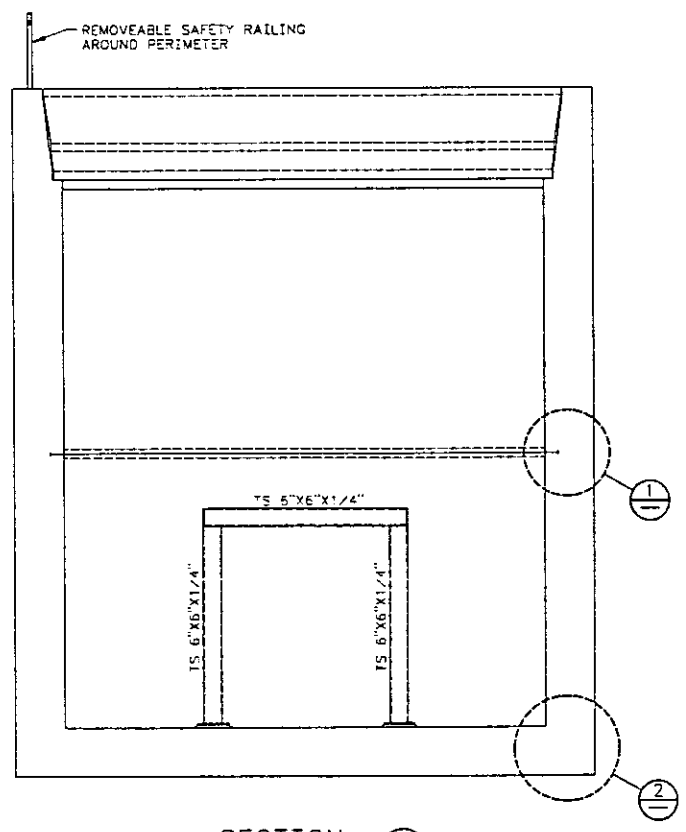

SECTION
SCALE: 1/2"=1'-0"

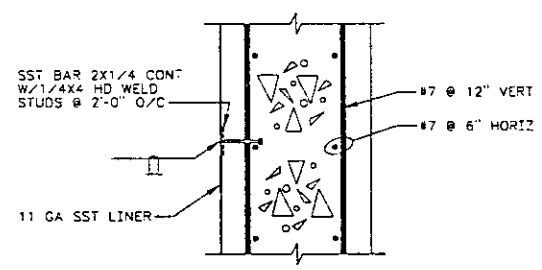

DETAIL
SCALE: 1-1/2"=1'-0"

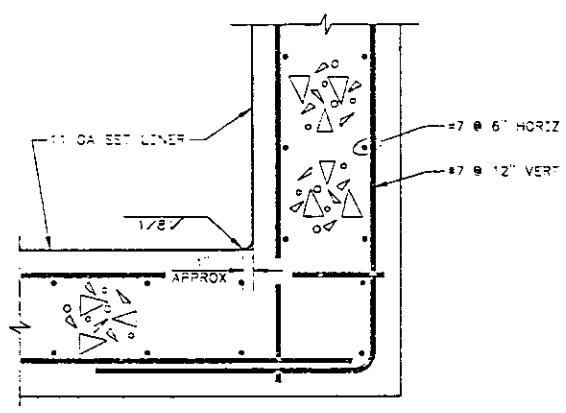

DETAIL
SCALE: 1-1/2"=1'-0"

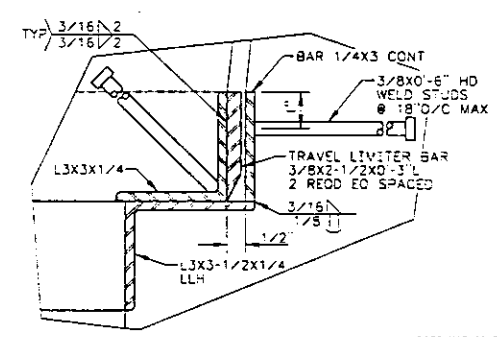

DETAIL
SCALE: 6"=1'-0"

DOES NOT CONTAIN CLASSIFIED OR UNCLASSIFIED CONTROLLED NUCLEAR INFORMATION

Reviewing Official/ADC
Kaiser Engineers Hanford Company
Date

CONCEPTUAL

IMPACT LEVEL 1 EDT

DRAWN RC CROSKREY
CHECKED
SAFETY
ENVIR
QC
LEAD CHG APPR

U.S. DEPARTMENT OF ENERGY
RICHLAND OPERATIONS OFFICE
KAISER ENGINEERS HANFORD COMPANY

STRUCTURAL VENT STATION

PROJECT W-058 REDL OF CROSS SITE XFR SYSTEM

LVL 1	BLDG NO 1	BLDG NO 2	DWG NO	REV NO
F	2000	0200 0300 0301	ES-058-S1	0

SCALE SHOWN | JOB NO. ER7004 | SHEET 1 OF 1

APPROVED FOR IMPLEMENTATION
BY
FOR DATE

NUMBER	TITLE	REFERENCES
ES-058-S11	SITE PLAN & DWG LIST	

DRAWING "PRACEABILITY" LIST

REV NO.	DESCRIPTION	REV BY DATE	KEY APPROVALS	NOTIFY FOR INFORMATION	FOR DATE

REVISIONS

CAD FILE CAD CODE

L-3 KEHCAD

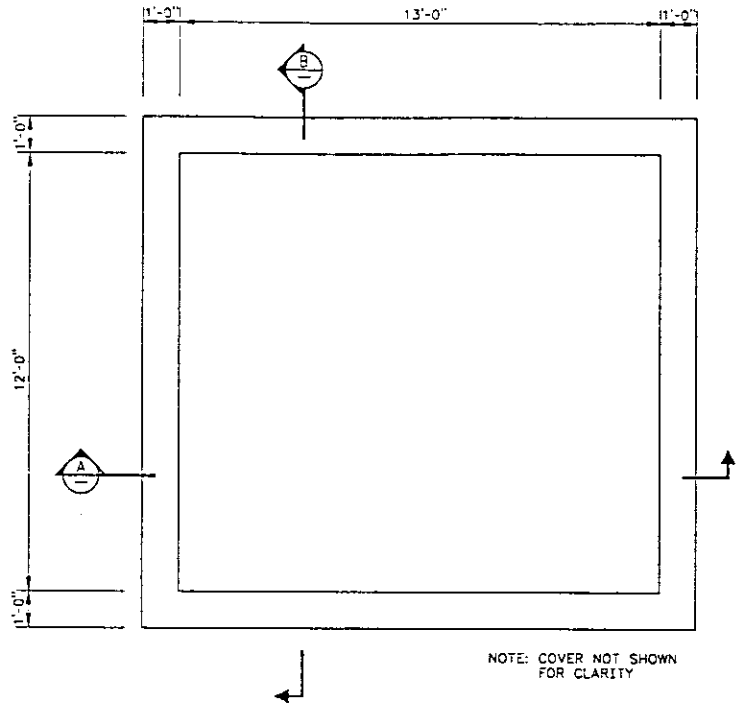

PLAN
SCALE 1/2"=1'-0"

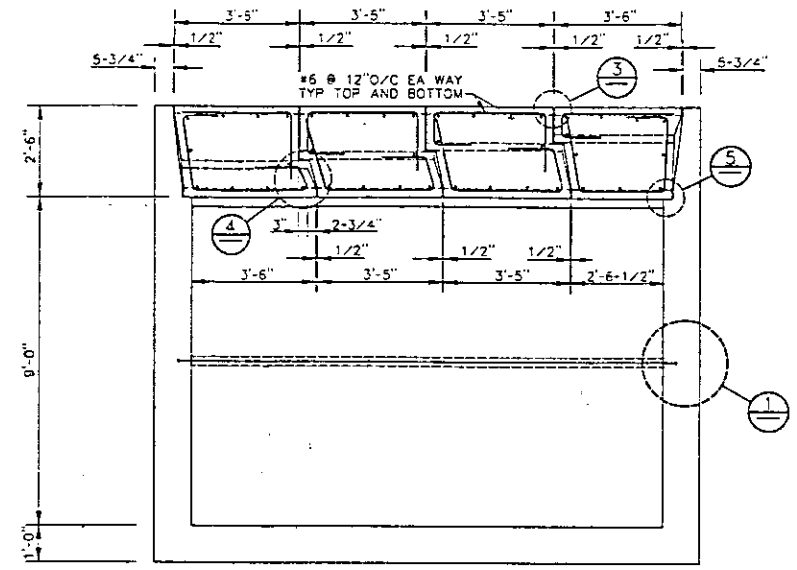

SECTION A
SCALE: 1/2"=1'-0"

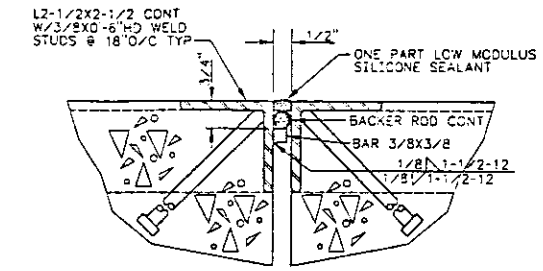

DETAIL 3
SCALE: 6"=1'-0"

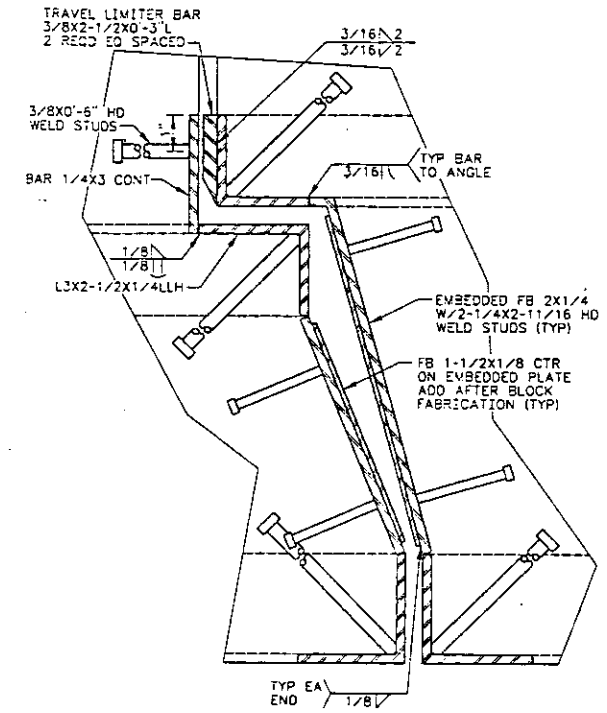

DETAIL 4
SCALE: 6"=1'-0"

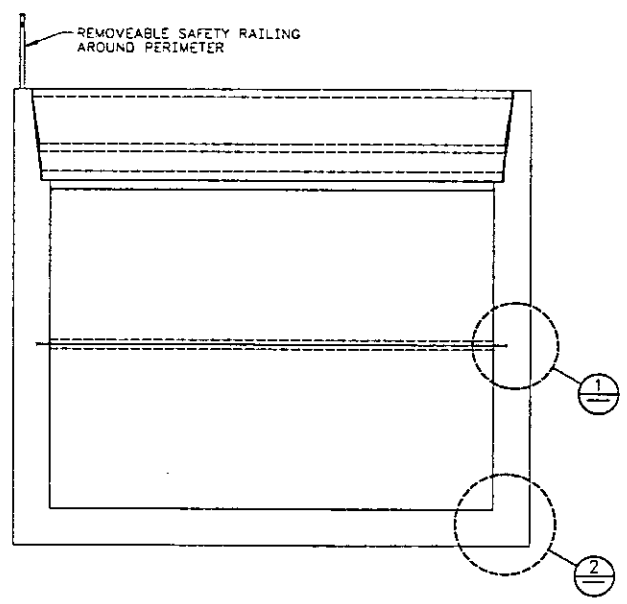

SECTION B
SCALE: 1/2"=1'-0"

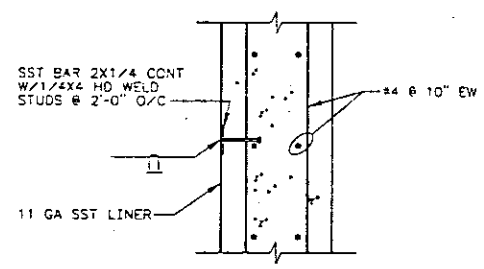

DETAIL 1
SCALE: 1-1/2"=1'-0"

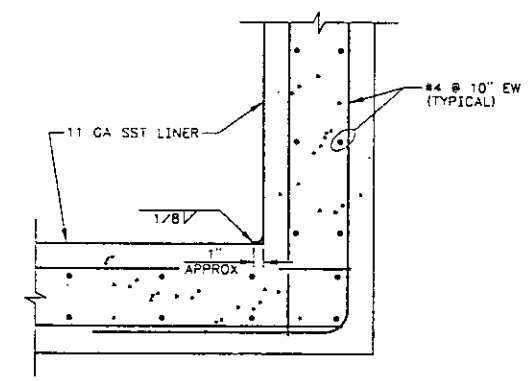

DETAIL 2
SCALE: 1-1/2"=1'-0"

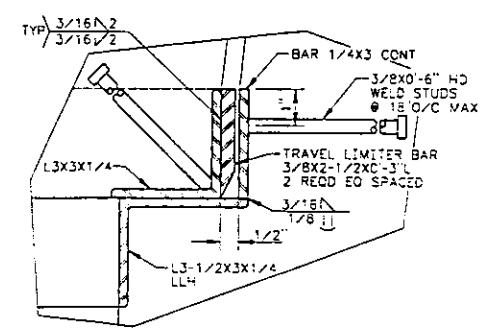

DETAIL 5
SCALE: 6"=1'-0"

DOES NOT CONTAIN CLASSIFIED OR UNCLASSIFIED CONTROLLED NUCLEAR INFORMATION

Reviewing Official/ADC
Kaiser Engineers Hanford Company

Date

CONCEPTUAL

IMPACT LEVEL: EDT

U.S. DEPARTMENT OF ENERGY
RICHLAND OPERATIONS OFFICE
KAISER ENGINEERS HANFORD COMPANY

STRUCTURAL
DIVERSION BOXES 1, 2, & 3

W-058 REPL OF CROSS SITE XFR SYSTEM

F | 2000, 2800, 2801 | ES-058-S2 | 0

SCALE SHOWN | JOB NO. ER1004 | SHEET 1 OF 1

DRAWN: RC CROSKREY

ES-058-C1 | SITE PLAN & DWG LIST

REFERENCES

REVISIONS

DRAWING TRACEABILITY LIST

L-4

KEH-CAD

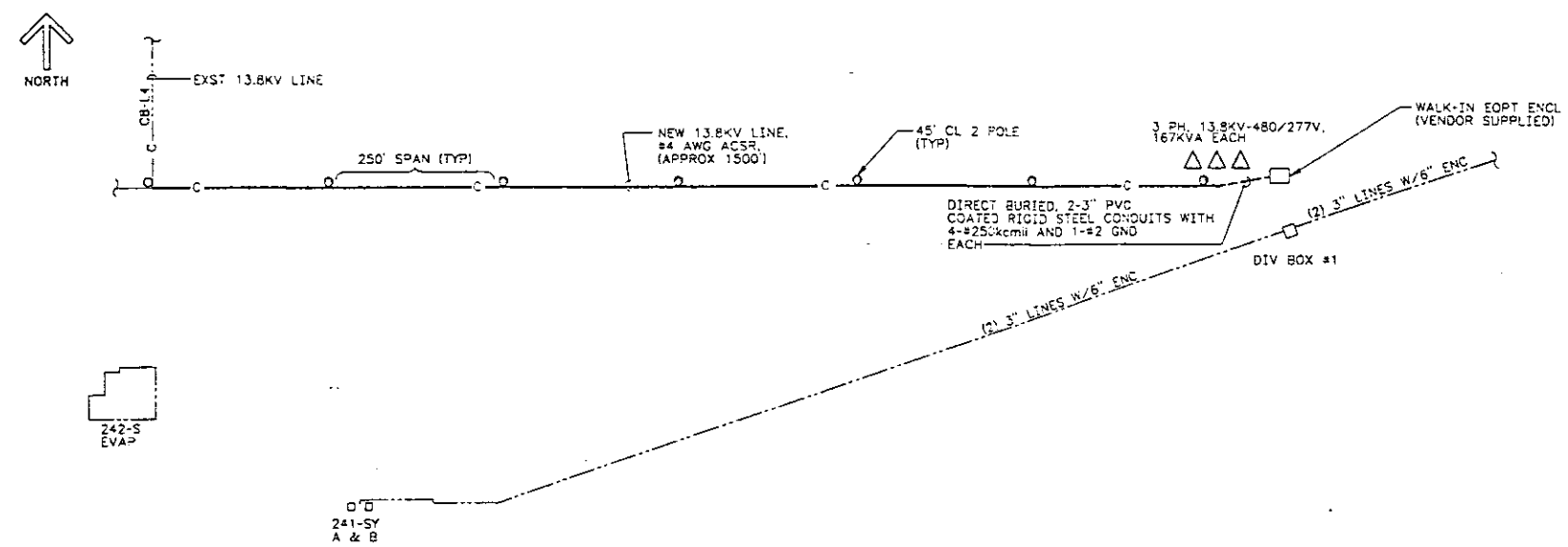

PLAN - DIV BOX #1

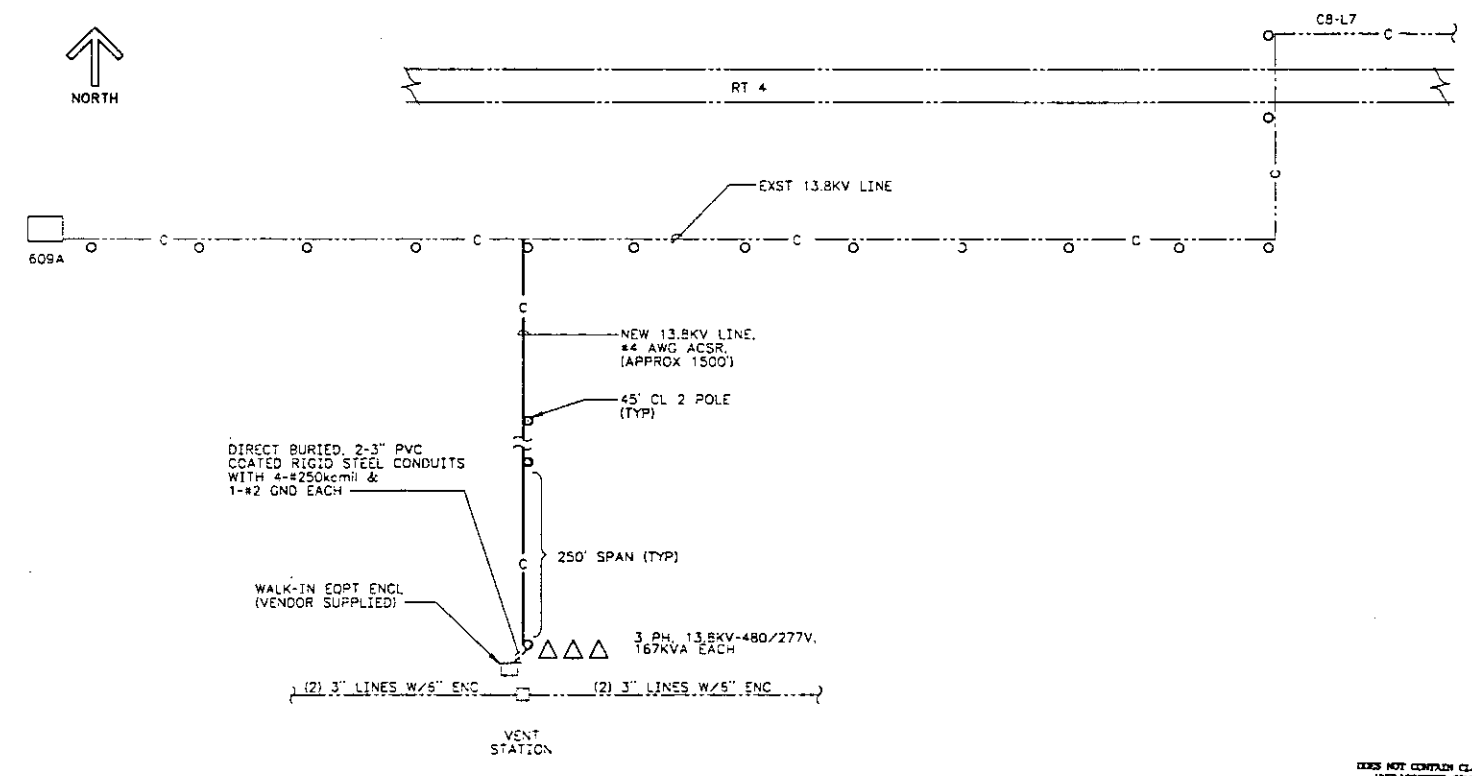

PLAN - VENT STATION

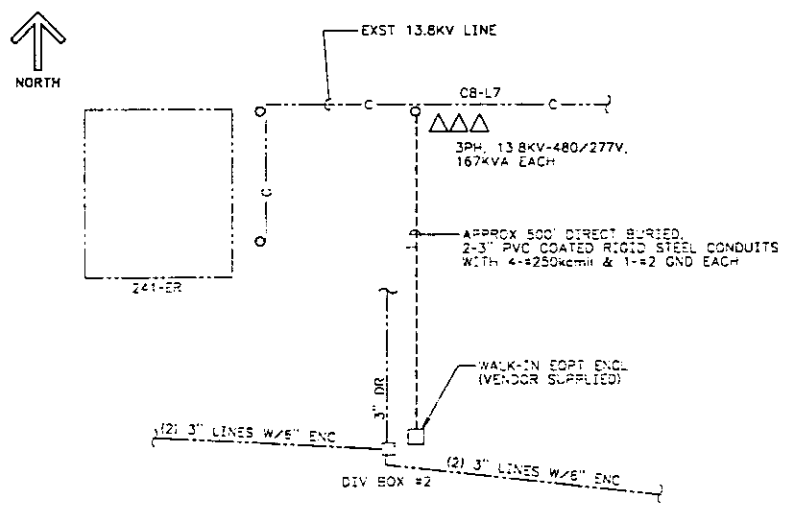

PLAN - DIV BOX #2

LEGEND

- △ POLE MOUNTED TRANSFORMER
- ● NEW POLE
- ○ EXISTING POLE

DOES NOT CONTAIN CLASSIFIED OR UNCLASSIFIED CONTROLLED NUCLEAR INFORMATION

Reviewing Official/ADC
Kaiser Engineers Hanford Company

Date

CONCEPTUAL

IMPACT LEVEL	EDT
DRAWN	J.L. BRINKLEY
CHECKED	
SAFETY	
ENVIR	
QE	
LEAD DISC GRPD	
APPROVED FOR IMPLEMENTATION	

U.S. DEPARTMENT OF ENERGY
RICHLAND OPERATIONS OFFICE
KAISER ENGINEERS HANFORD COMPANY

ELECTRICAL SITE PLAN

CROSS SITE TRANSFER SYSTEM REPLACEMENT

SITE	BLDG NO	INDEX NO	DWG NO	REV NO
F	200-W/200-E	8001	ES-058-N1	0

SCALE 1" = 100'-0" | JOB NO. F21004 | SHEET 1 OF 1

NUMBER	TITLE

DRAWING TRACEABILITY LIST

NUMBER	TITLE

REFERENCES

MF	REV NO.	DESCRIPTION	REV BY DATE	KEH APPROVALS	APVD FOR CONSTRUCTION FOR DATE

REVISIONS

CAD FILE | CAD CODE

L-5

KEHCAD

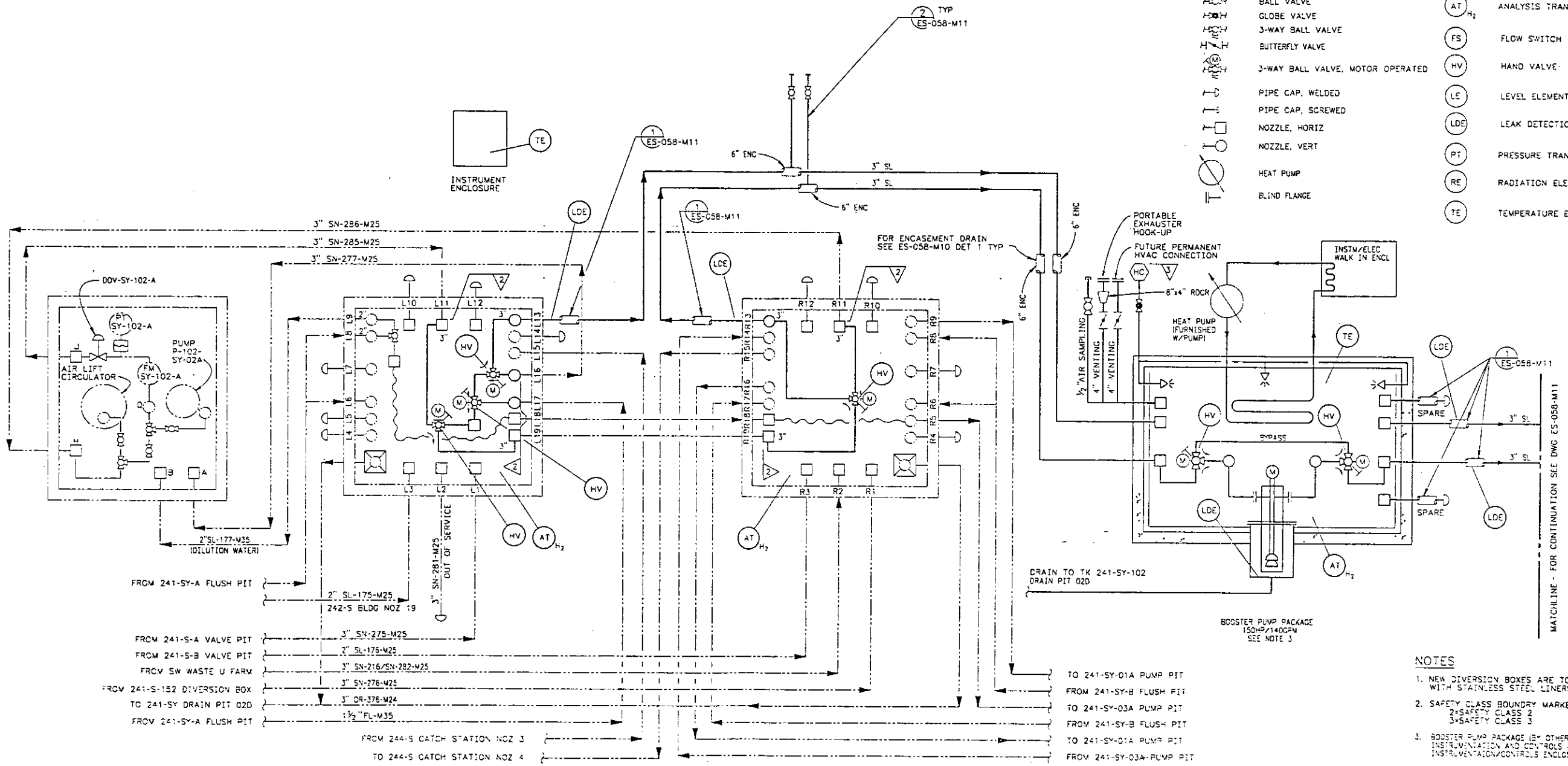

LEGEND

DR	DRAIN	HC	HOSE CONNECTION
EHTR	ENCASEMENT HYDRO TEST RISER		SPRAY NOZZLE
FD	FLOOR DRAIN		
ENC	ENCASEMENT		
SL	SLURRY		
SN	SUPERNATANT		
	EXISTING PIPING	2	SAFETY CLASS BOUNDARY
	NEW PIPING OR EQUIPMENT		
	FLEX HOSE		
	BALL VALVE	AT H_2	ANALYSIS TRANSMITTER (HYDROGEN)
	GLOBE VALVE		
	3-WAY BALL VALVE	FS	FLOW SWITCH
	BUTTERFLY VALVE		
M	3-WAY BALL VALVE, MOTOR OPERATED	HV	HAND VALVE
	PIPE CAP, WELDED	LE	LEVEL ELEMENT
	PIPE CAP, SCREWED		
	NOZZLE, HORIZ	LDE	LEAK DETECTION ELEMENT
	NOZZLE, VERT	PT	PRESSURE TRANSMITTER
	HEAT PUMP	RE	RADIATION ELEMENT
	BLIND FLANGE	TE	TEMPERATURE ELEMENT

NOTES

1. NEW DIVERSION BOXES ARE TO BE CONSTRUCTED WITH STAINLESS STEEL LINERS.
2. SAFETY CLASS BOUNDRY MARKERS:
   2=SAFETY CLASS 2
   3=SAFETY CLASS 3
3. BOOSTER PUMP PACKAGE (BY OTHERS) TO INCLUDE INSTRUMENTATION AND CONTROLS AND WALK-IN INSTRUMENTATION/CONTROLS ENCLOSURE.
4. FINAL JUMPER CONFIGURATION SHALL PROVIDE CAPABILITY FOR SUPERNATANT TRANSFER IN EITHER DIRECTION THRU EITHER LINE.

DOES NOT CONTAIN CLASSIFIED OR UNCLASSIFIED CONTROLLED NUCLEAR INFORMATION

Reviewing Official/ADC
Kaiser Engineers Hanford Company
5/14/91
Date

CONCEPTUAL

DRAWN	L. EPPERLY
CHECKED	5-14-91
SAFETY	
CNSTR	
QE	
LEAD ENG APVD	
APPROVED FOR IMPLEMENTATION	

U.S. DEPARTMENT OF ENERGY
RICHLAND OPERATIONS OFFICE
KAISER ENGINEERS HANFORD COMPANY

PIPING
EFD
CROSS SITE XFR SYSTEM

PROJECT W-058 REPL OF CROSS SITE XFR SYSTEM

SIZE	BLDG NO	SYSTEM NO	DWG NO	REV NO
F	200W	7001	ES-058-M10	0

SCALE NONE | DRAWING NO EP1004 | SHEET 1 OF 1

ES-058-01 CIVIL SITE PLAN & DWG LIST

NUMBER	TITLE

DRAWING TRACEABILITY LIST

NUMBER	TITLE

REFERENCES

REV NO	DESCRIPTION	REV BY / DATE	KEW APPROVALS	APVD FOR IMPLEMENTATION DATE

REVISIONS

CAD FILE 1W058M10 CAD CODE 2U1BW-ACD2-10.0.1A

KE-CAD

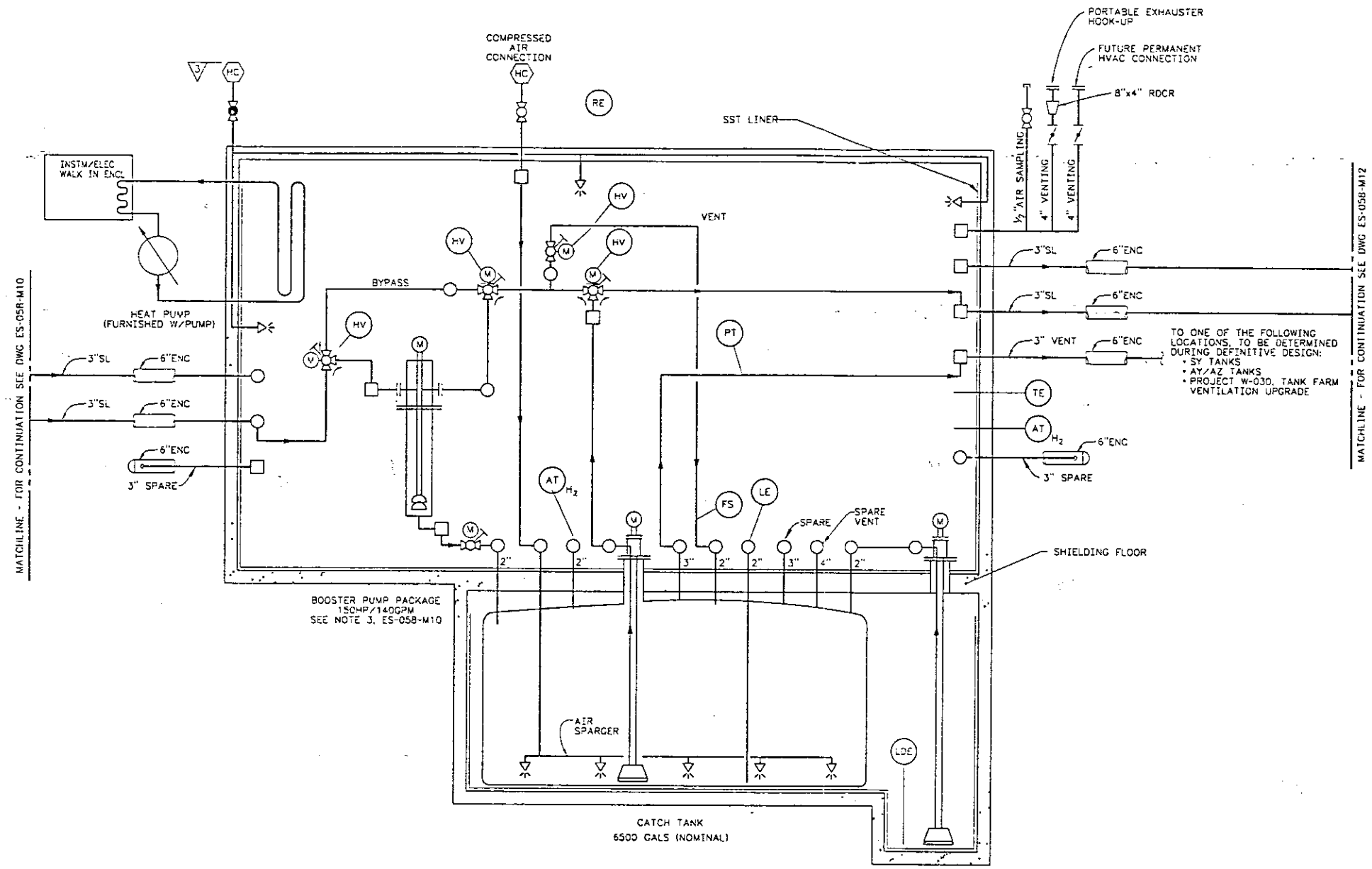

VENT STATION

SEE NOTE 4, ES-058-M10

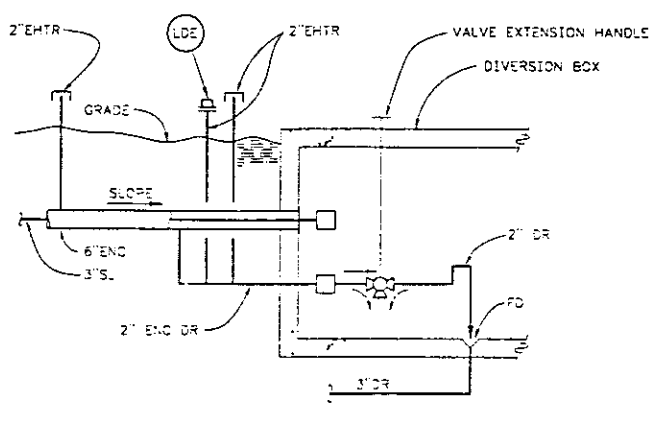

DETAIL 1 (ES-058-M10,M12)

SCALE: NONE

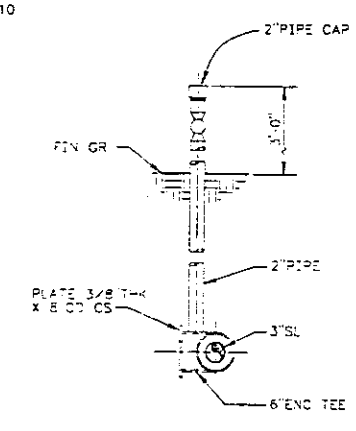

DETAIL 2 (ES-058-M10)

1"=1'-0"

NOTE

FOR NOTES AND SYMBOL LEGEND, SEE DRAWING ES-058-M10

DOES NOT CONTAIN CLASSIFIED OR UNCLASSIFIED CONTROLLED NUCLEAR INFORMATION

Reviewing Official/ADC
Kaiser Engineers Hanford Company
3/19/91
Date

CONCEPTUAL

NUMBER	TITLE	REFERENCES
ES-058-M11	CIVIL SITE PLAN & DWG LIST	

REV NO	DESCRIPTION	REV BY	DATE	KEH APPROVALS	APPD FOR CONSTRUCTION FOR DATE
	REVISIONS				

DRAWN ED ROBERTS
CHECKED 3-14-91
SAFETY
ENVIR
QA
LEAD ENG APPR

U.S. DEPARTMENT OF ENERGY
RICHLAND OPERATIONS OFFICE
KAISER ENGINEERS HANFORD COMPANY

PIPING
EFD
CROSS SITE XFER SYSTEM

PROJECT W-058 REPL OF CROSS SITE XFER SYSTEM

F | 200W | 7001 | ES-058-M11 | 0

SCALE NONE | EF-004 | SHEET 1 OF 1

KEHCAD

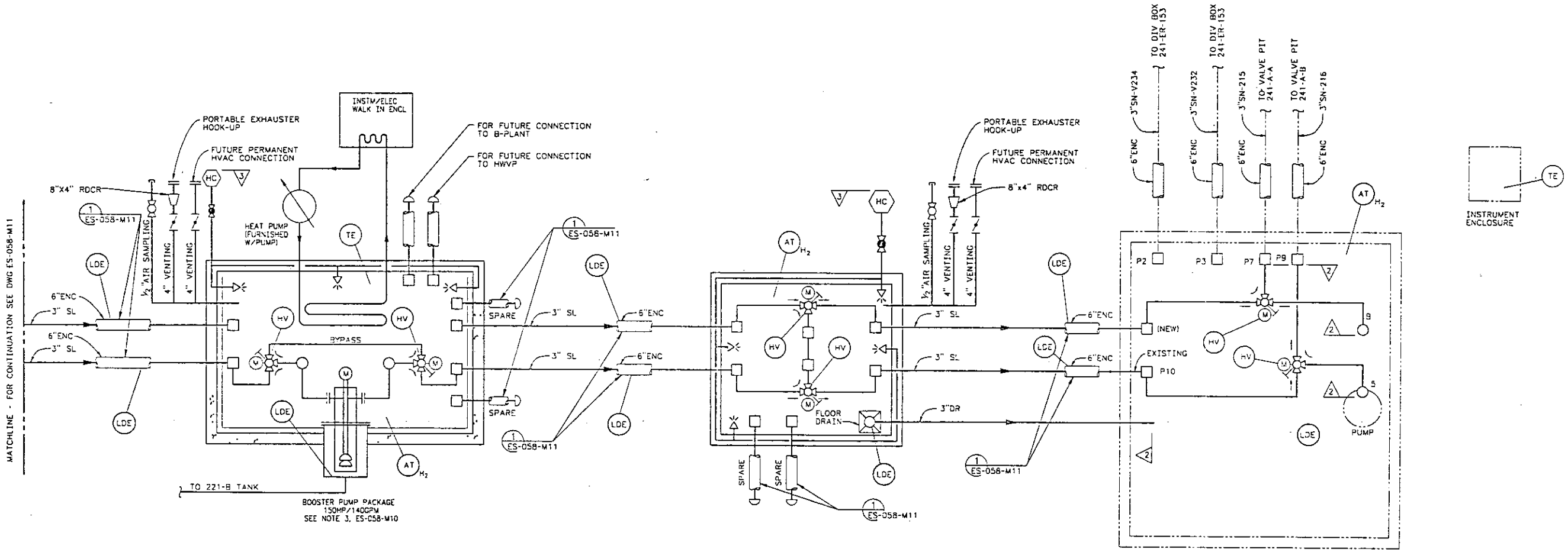

NOTE

FOR NOTES AND SYMBOL LEGEND SEE DRAWING ES-058-M10.

DOES NOT CONTAIN CLASSIFIED OR UNCLASSIFIED CONTROLLED NUCLEAR INFORMATION

Reviewing Official/ADC
Kaiser Engineers Hanford Company
Date 3/14/91

CONCEPTUAL

DRAWN	B. HARDING
CHECKED	5/14/91
SAFETY	
ENVIR	
QE	
LEAD ENG APVD	
APPROVED FOR IMPLEMENTATION	

IMPACT LEVEL: 1 EDT

U.S. DEPARTMENT OF ENERGY
RICHLAND OPERATIONS OFFICE
KAISER ENGINEERS HANFORD COMPANY

PIPING
EFD
CROSS SITE XFR SYSTEM

PROJECT W-058 REPL OF CROSS SITE XFR SYSTEM

SIZE	BLDG NO	INDEX NO	DWG NO	REV NO
F	2005	7001	ES-058-M12	0

SCALE NONE | JOB NO. EB 1004 | SHEET 1 OF 1

NUMBER	TITLE
ES-058-C11	CIVIL SITE PLAN & DWG LIST

DRAWING TRANSMITTAL LIST — NEXT USED ON — REFERENCES

NO.	DESCRIPTION	REV BY	DATE	KEY APPROVALS	APVD FOR IMPLEMENTATION	APVD FOR CONST

REVISIONS

CAD FILE: ZNDSBM12 | CAD CODE: PLANT-ADDITIONS

KEHCAD

NORTH

W76300 W75200 W74100 W73000 W71900 W70800 W69700

N39200 N38550 N37900 N37250 N36600 N35950 N35300

221-U CANYON BUILDING

12" CI SAN WATER (H-2-6000)
20" CI RAW WATER (H-2-6000)

RR TRACK

16TH ST

CONTAMINATED AREA W-29

RR GR EL 678

6" VCP (H-2-43057)

3-LINE ENCASEMENT (H-2-15860)

INV 670.00

TOC EL 673.57

216-S-23 CRIB

℄ EL 675.50'

℄ EL 676.57'

DIVERSION BOX #1

INV EL 685.65

216-U-17 CRIB

TYP

6-59 ENCASEMENT (H-2-43056)

(N38806.14)

MATCH LINE CONTINUED ON ES-058-M14

(N38288.98)

GR EL 724

GR EL 704'

GR EL 720'

GR EL 704'

GR EL 688'

ES-058-M16 PIPE TRENCH

(2) 3" LINES W/6" ENC

GR EL 696'

ALBANY AVE

ACCESS ROAD

BELOIT AVE

GR EL 692'

216-U-8

216-U-12

2-30T ENCASEMENT (H-2-39551)

3-38 ENCASEMENT (H-2-5775)

℄ EL 655.78

℄ EL661.06

241-SY TANK FARM

242-S EVAP

GR EL 674'

VALVE PIT 241-SY-A&B (H-2-37780)

GR EL 675

N36358.00 W75315.75

℄ EL 670.25'

GR EL 684

INV EL 655.30'

216-S-9 CRIB

INV 681.52

ES-058-M15 TYPICAL WHERE PIPING CROSSES UNDER RAILROAD OR ROAD

6" CRIB DRAIN (H-2-46111)

12" SST OWND UNK/10" 2250 OWND SL

3" SST CRIB

12" SST OWND UNK/10" 2250 OWND SL

12" CI SAN WATER
20" CI RAW WATER

241-S TANK FARM

3" VSG1-MPS/3" VSG2-MPS TO 244-S CATCH STATION (H-2-71051)

DETAIL (TYP) 1
3/32"=1'-0"

6"ENC
3" SL
ANCHOR
10'-0"
1'-4"
50'-0"

SECTION A
SCALE: 3/4"=1'-0"

(1'-4")
3" POLYURETHANE INSULATION
12" FLEXIBLE DUCT
6" ENC
3" SL

DOES NOT CONTAIN CLASSIFIED OR UNCLASSIFIED CONTROLLED NUCLEAR INFORMATION

Reviewing Official/ADC
Kaiser Engineers Hanford Company

Date

CONCEPTUAL

U.S. DEPARTMENT OF ENERGY
RICHLAND OPERATIONS OFFICE
KAISER ENGINEERS HANFORD COMPANY

PIPING PLAN
200 WEST

PROJECT W-058 REPL OF CROSS SITE XFR SYSTEM

F | 200W | 0403 | ES-058-M13 | 0

SCALE 1"=200'

ER1004

L-9

KEHCAD

ES-058-C1 : CIVIL SITE PLAN & DWG LIST

REVISIONS

LOAD FILE 2WOSSMY3 LOAD DATE 2JUL13M:AUG21:10:01AM (2001)

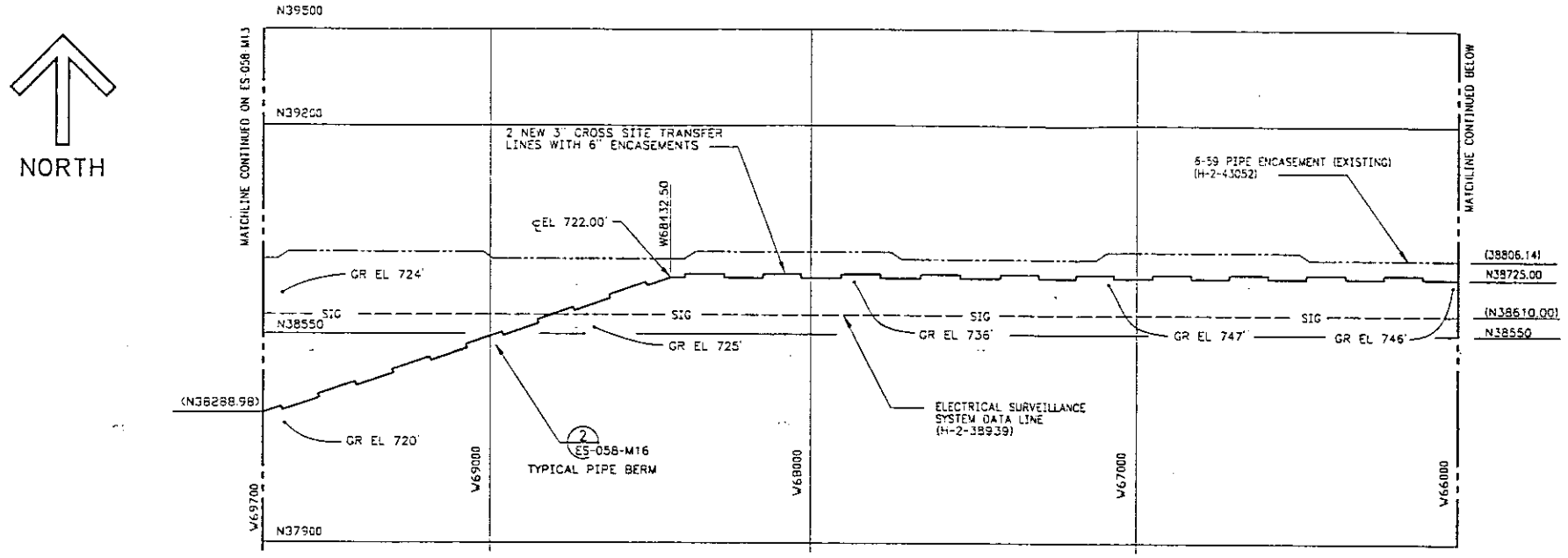

PLAN

SCALE: 1"= 200'

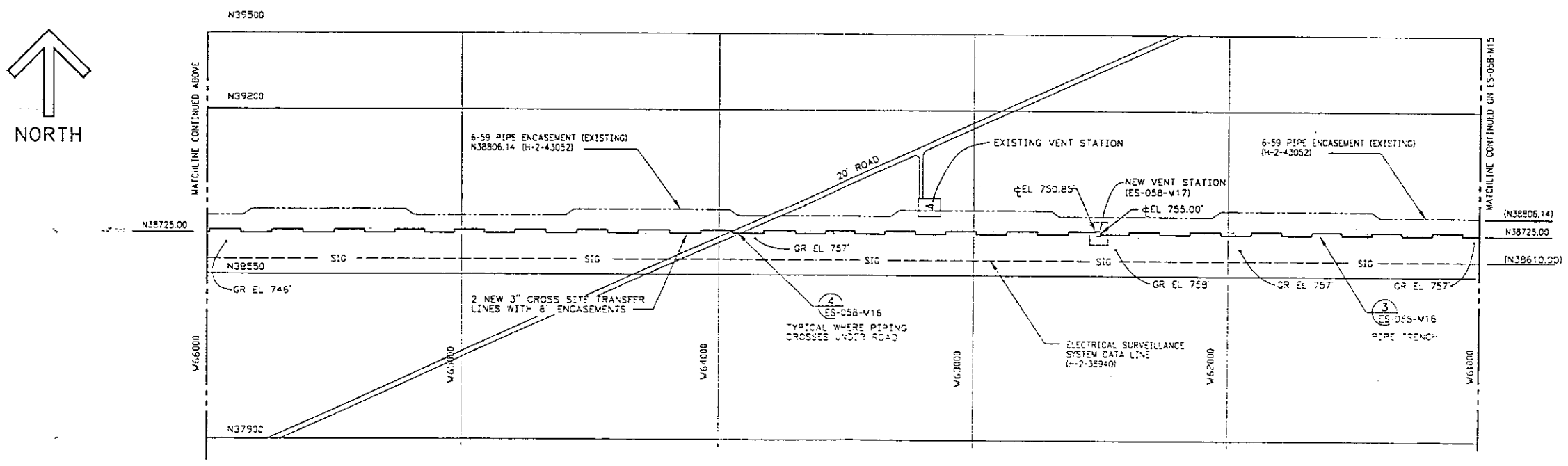

PLAN

SCALE: 1"= 200'

DOES NOT CONTAIN CLASSIFIED OR UNCLASSIFIED CONTROLLED NUCLEAR INFORMATION

Reviewing Official/ADC
Kaiser Engineers Hanford Company

Date

CONCEPTUAL

IMPACT LEVEL	1 EQT
DRAWN	STAN HARRIS
CHECKED	5/1/97
SAFETY	
ENVIR	
IH	
QA/ENG APPR	
APPROVED FOR IMPLEMENTATION	
PE	
DATE	

U.S. DEPARTMENT OF ENERGY
RICHLAND OPERATIONS OFFICE
KAISER ENGINEERS HANFORD COMPANY

PIPING PLAN
CROSS SITE TRANSFER SYSTEM
200 EAST TO 200 WEST

PROJECT: W-058 REP. OF CROSS SITE XFR SYSTEM

ACE	A/E NO	TYPE	SEQ NO	REV
F	2000	0403	ES-058-M14	0

SCALE: 1"= 200' | LOC NO: EP1024 | SHEET 1 OF 1

ES-058-01 CIVIL SITE PLAN & DWG LIST

NUMBER	TITLE

NUMBER	TITLE	REFERENCES

DRAWING TRACEABILITY LIST — NEXT USED ON

NO	DESCRIPTION	DATE	KE APPROVALS	MAD FOR IMP CHG PER DATE

REVISIONS

CAD FILE: ES058M14 CAD CODE: 2D-PIPING-PLAN-CONN (2000)

L-10

KEHCAD

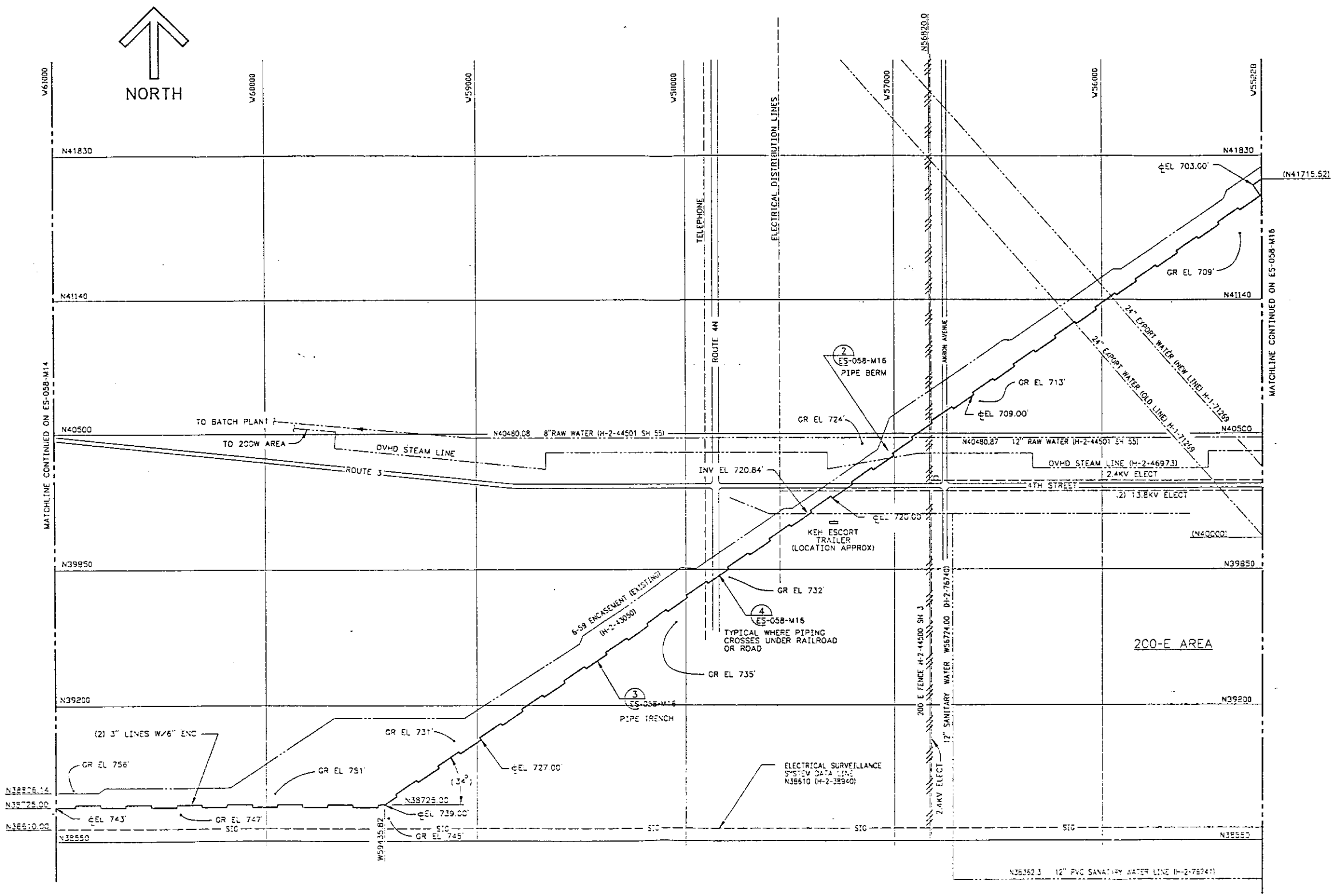

PLAN
SCALE: 1" = 250'

DOES NOT CONTAIN CLASSIFIED OR UNCLASSIFIED CONTROLLED NUCLEAR INFORMATION

Reviewing Official/ADC
Kaiser Engineers Hanford Company
Date

CONCEPTUAL

Drawn STAN HARRIS	U.S. DEPARTMENT OF ENERGY RICHLAND OPERATIONS OFFICE KAISER ENGINEERS HANFORD COMPANY
	PIPING PLAN CROSS SITE TRANSFER SYSTEM 200 EAST TO 200 WEST
	PROJECT W-058 REPL OF CROSS SITE XFR SYSTEM
	F 20001 0403 ES-058-M15 0
	SCALE 1" = 250' FILE NO. ER1004 SHEET 1 OF 1

NUMBER	TITLE	REFERENCES
ES-058-C1	CIVIL SITE PLAN & DWG LIST	

DRAWING TRACEABILITY LIST — NEXT USED ON

REV NO	DESCRIPTION	REV BY / DATE	KEH APPROVALS	APPD FOR IMPLEMENTATION BY DATE

REVISIONS

CAD FILE ES058M15 CAD CODE 2_0_0M1A0001.DGN (2001)

APPROVED FOR IMPLEMENTATION BY DATE

IMPACT LEVEL EDT

KEH-CAD

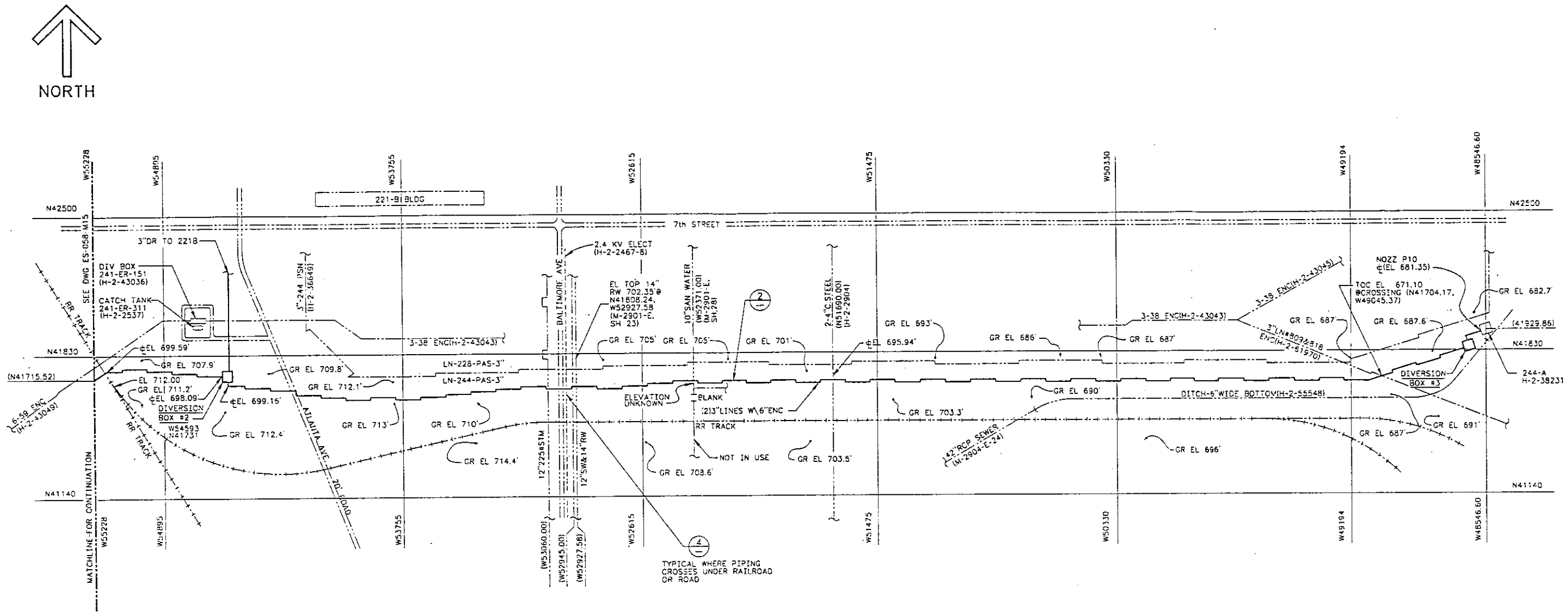

DOES NOT CONTAIN CLASSIFIED OR UNCLASSIFIED CONTROLLED NUCLEAR INFORMATION

Reviewing Official/ADC
Kaiser Engineers Hanford Company

Date

CONCEPTUAL

IMPACT LEVEL	EST
DRAWN B. HARDING	U.S. DEPARTMENT OF ENERGY RICHLAND OPERATIONS OFFICE KAISER ENGINEERS HANFORD COMPANY
CHECKED	PIPING PLAN 200 E
SAFETY	
QA	
CAD ENG. APPR	
PROJECT	W-058 REPL OF CROSS SITE XFR SYSTEM
SIZE F	DWG NO 200 E 0403 — ES-058-M16 — REV 0
SCALE 1"=200'	JOB NO. ER 1004 — SHEET 1 OF 1

ES-058-C1 CIVIL SITE PLAN & DWG LIST

NUMBER	TITLE
NUMBER	TITLE	REFERENCES

DRAWING TRACEABILITY LIST — NEXT USED ON

REV NO	DESCRIPTION	REV BY / DATE	KEY APPROVALS	APPD FOR CONST	APPD FOR USE
REVISIONS					

CAD FILE 1W058M16 (EXD CODE CUTSHEET ADAD 10 JUN 1992)

APPROVED FOR IMPLEMENTATION

L-12

KEMCAD

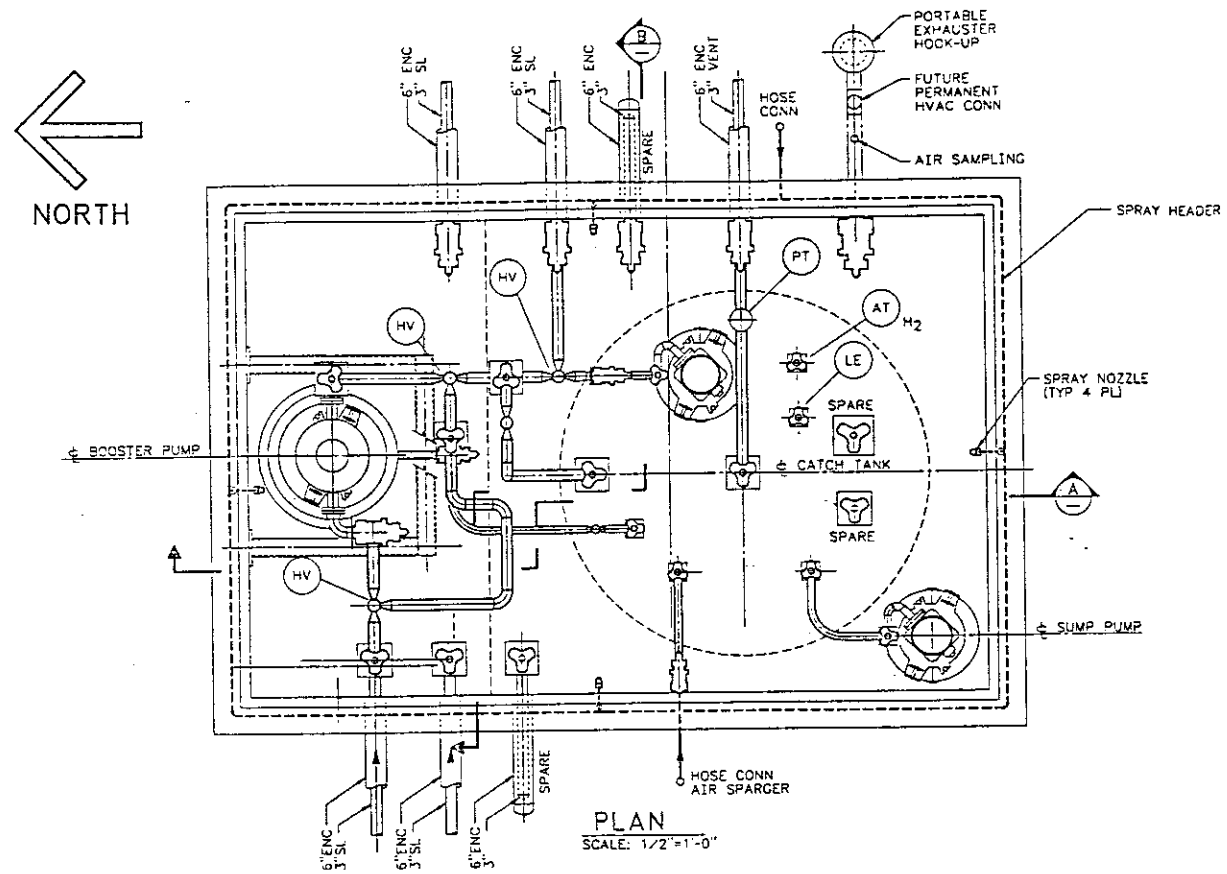

PLAN
SCALE: 1/2"=1'-0"

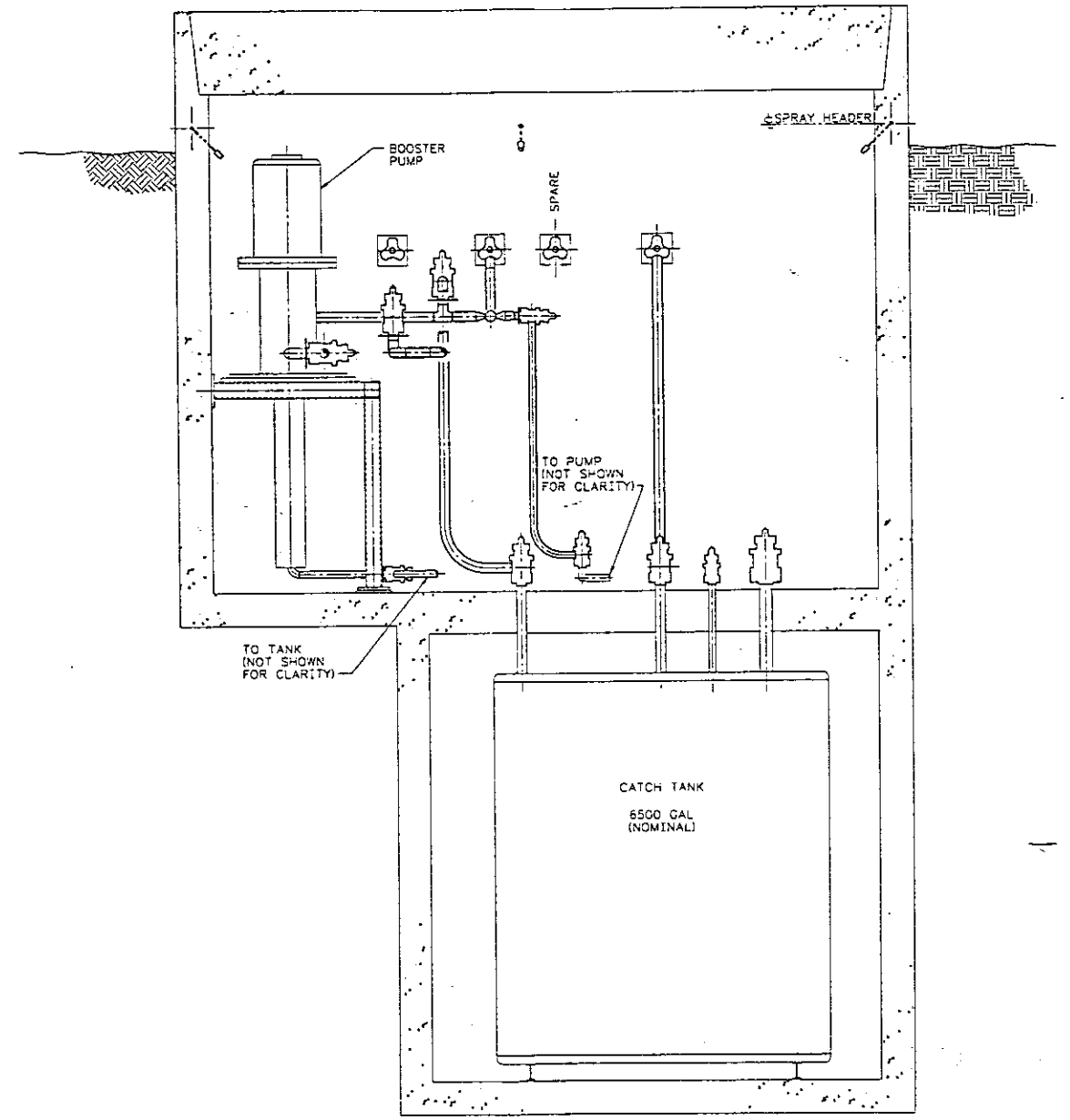

SECTION A
1/2"=1'-0"

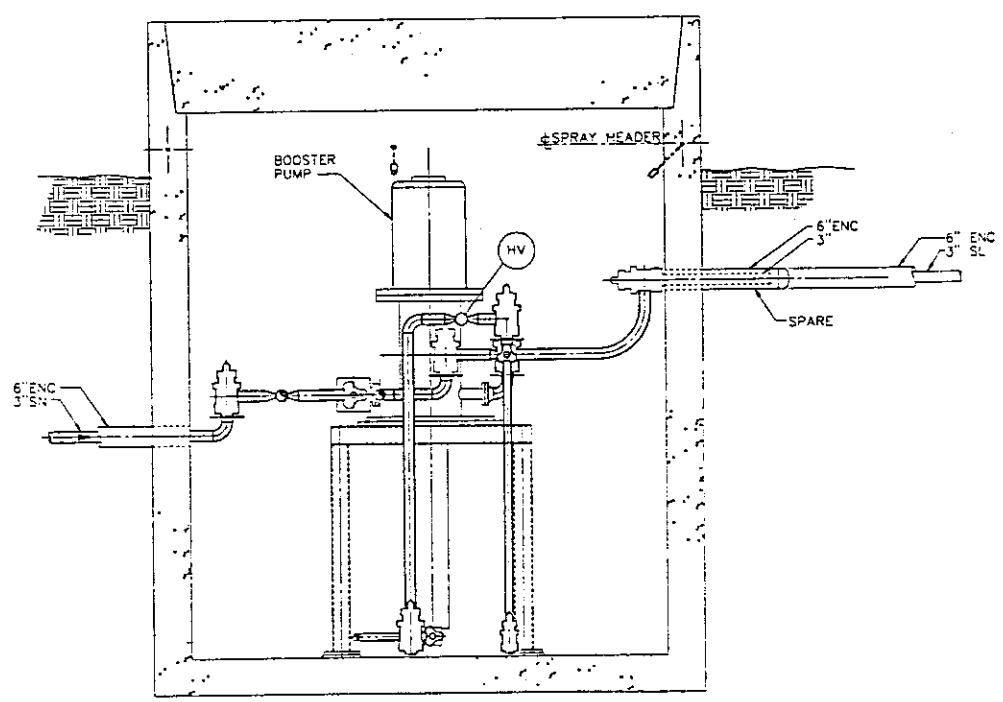

SECTION B
1/2"=1'-0"

DOES NOT CONTAIN CLASSIFIED OR UNCLASSIFIED CONTROLLED NUCLEAR INFORMATION

REVIEWING OFFICIAL/ADC: _____

DATE: _____

CONCEPTUAL

IMPACT LEVEL | EOT

DRAWN: PD ROBERTS 4/94
CHECKED: 8/1/94
SHEET:
CHECK:
DI:
LEAD ENG APPD:

U.S. DEPARTMENT OF ENERGY
RICHLAND OPERATIONS OFFICE
KAISER ENGINEERS HANFORD COMPANY

JUMPER ARRANGEMENT
VENT STATION

PROJECT: W058 REPL OF CROSS SITE XFR SYSTEM

SIZE	BLDG NO	DSGN NO	DWG NO	REV NO
F	2C0W	8404	ES-058-M17	0

SCALE 1/2"=1'-0" | DWG NO ER1604 | SHEET 1 OF 1

APPROVED FOR IMPLEMENTATION: BY: DATE:

NUMBER	TITLE	REFERENCE
ES-058-C01	CIVIL SITE PLAN & DWG LIST	

DRAWING TRACEABILITY: NEXT USED ON

REV NO	DESCRIPTION	REV BY / DATE	KEM APPROVALS	FOR IMPLEMENTATION
	REVISIONS			

CAD FILE: 1W058EM17 CAD CODE: 2C1EM ACCRITC.DWN(24)

L-13

KEMCAD

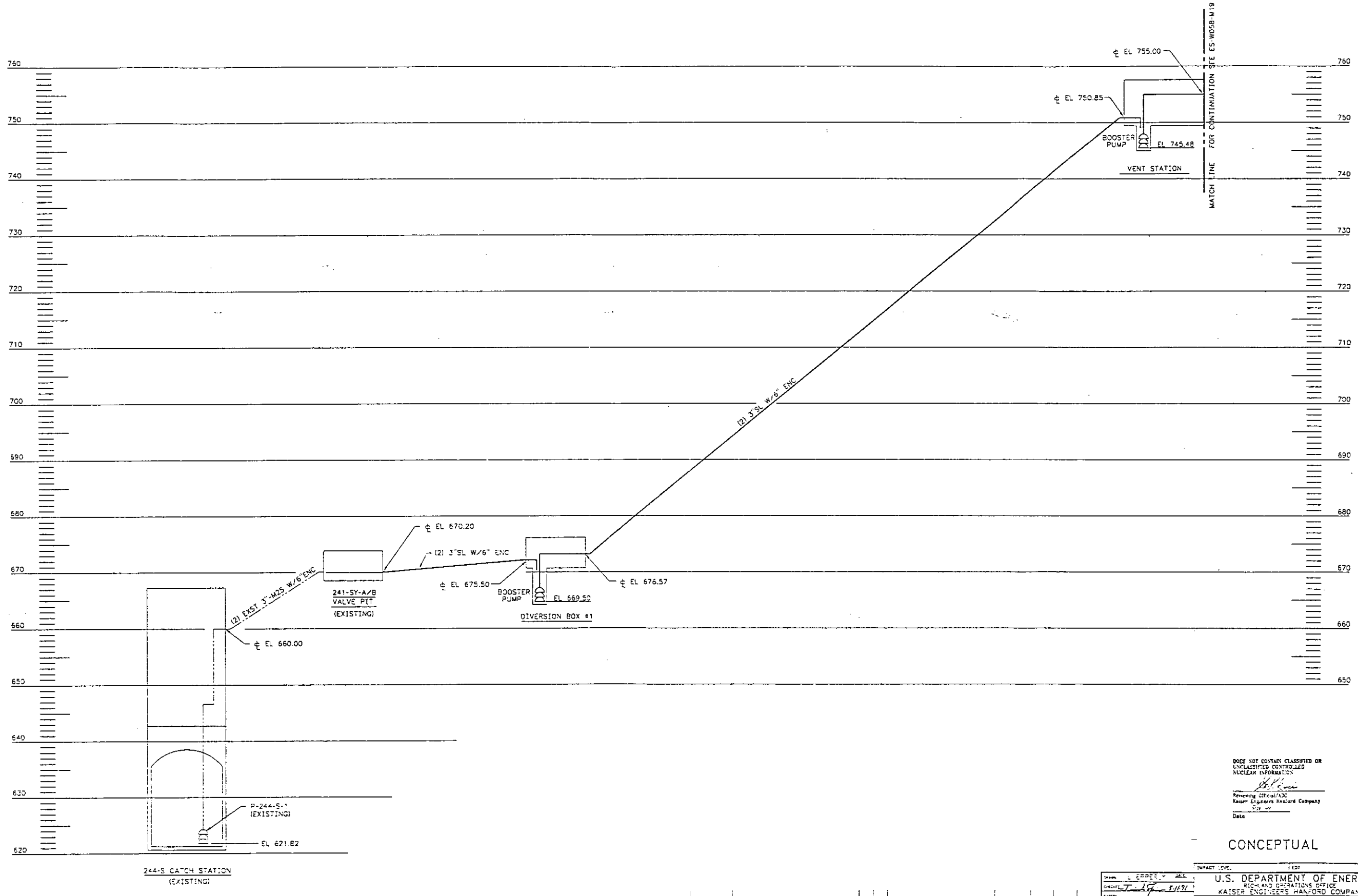

DOES NOT CONTAIN CLASSIFIED OR UNCLASSIFIED CONTROLLED NUCLEAR INFORMATION

Reviewing Official/KOC
Kaiser Engineers Hanford Company

Date

CONCEPTUAL

IMPACT LEVEL

DRAWN L. EPPERLY
CHECKED
SAFETY
OWNER
QA
LEAD THE APPD

U.S. DEPARTMENT OF ENERGY
RICHLAND OPERATIONS OFFICE
KAISER ENGINEERS HANFORD COMPANY

PIPING HYDRAULIC DIAGRAM

PROJECT W-058 REPL. OF CROSS SITE XFR SYSTEM

SYM	BLDG NO	SERIES NO	SEQ NO	REV NO
F	2000	8512	ES-058-M18	0

SCALE NONE FILE NO ER1002 SHEET 1 OF 1

ES-058-C1 CIVIL SITE PLAN & DWG LIST

NUMBER	TITLE
DRAWING TRANSMITTED TO	

NUMBER	TITLE
REFERENCES	
NEXT USED ON	

REV NO	DESCRIPTION	REV BY / DATE	KEM APPROVALS	KEM CHK / DATE	KEM APPD / DATE
REVISIONS					

CAD FILE ENGDRM18 CAD CODE NEW ADDITION

APPROVED FOR IMPLEMENTATION

BY DATE

L-14

KEMCAD

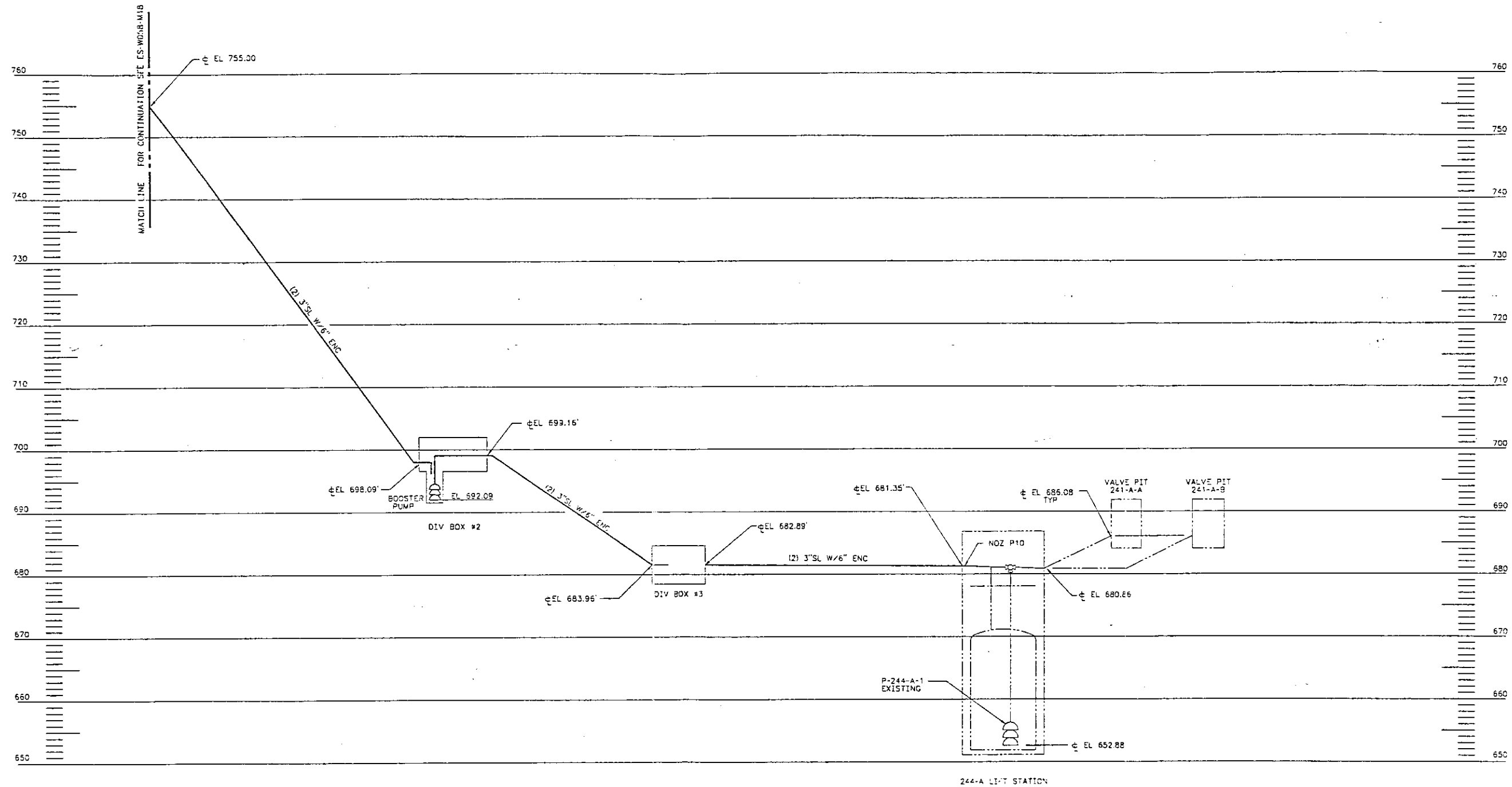

DOES NOT CONTAIN CLASSIFIED OR UNCLASSIFIED CONTROLLED NUCLEAR INFORMATION

Reviewing Official/ADC
Kaiser Engineers Hanford Company
Date

CONCEPTUAL

U.S. DEPARTMENT OF ENERGY
RICHLAND OPERATIONS OFFICE
KAISER ENGINEERS HANFORD COMPANY

PIPING
HYDRAULIC DIAGRAM

W-058 REPL OF CROSS SITE XFR SYSTEM

F | 2000 | 8512 | ES-058-M19 | 0

NONE | KEHCAD

L-15