NOTES:
FOR GENERAL NOTES AND PARTS/MATERIAL LIST SEE SHEET 1.

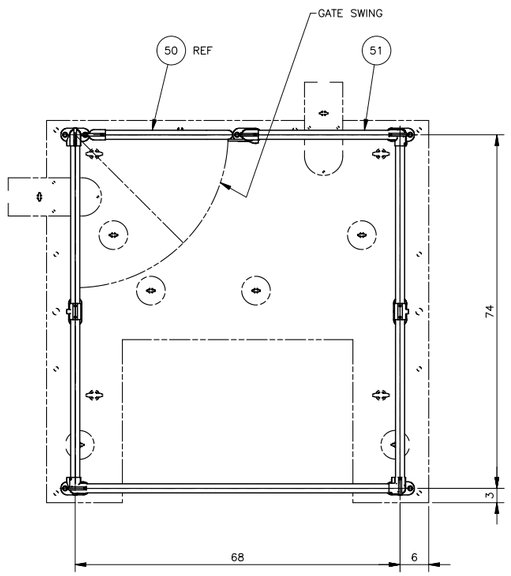


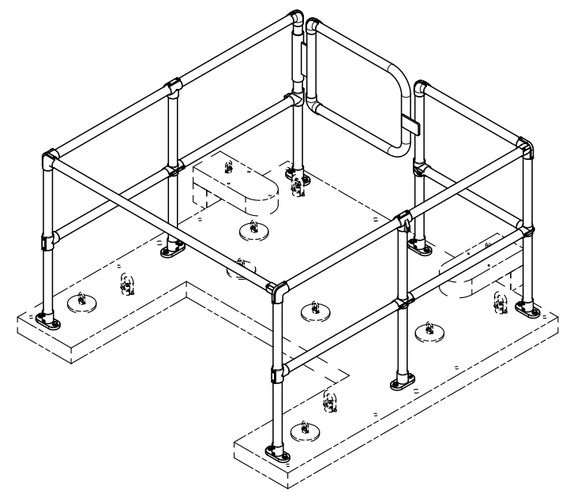

ISOMETRIC
SCALE: NONE

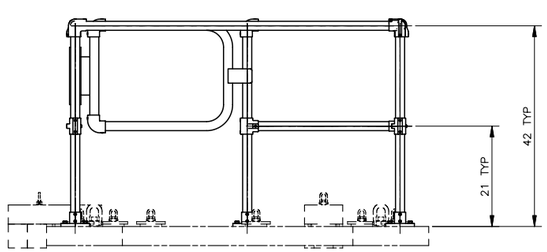


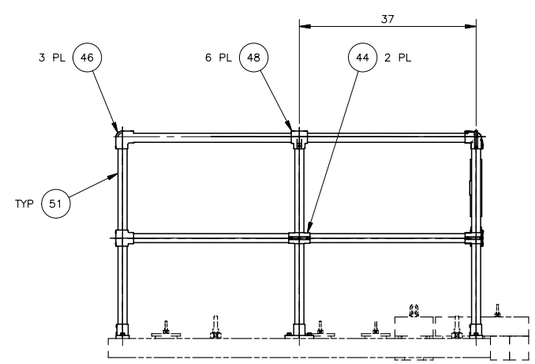


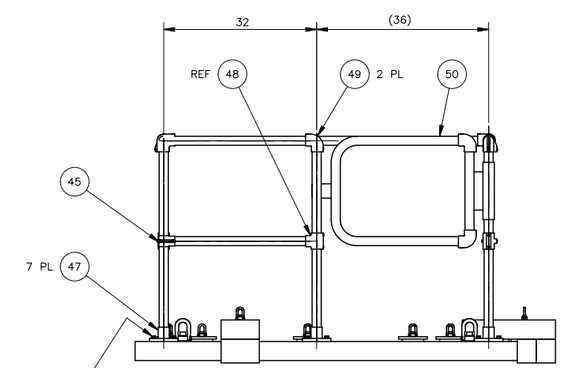


2 GUARD RAIL ASSEMBLY
SCALE: 1/12

DATE: Sep 17, 2019
HANFORD RELEASE

| DWG NUMBER | TITLE |
|---|---|
| DRAWING TRACEABILITY LIST | |

| REF NUMBER | TITLE |
|---|---|
| H-15-7 | A-FARM WRS AP PIT MODELS |
| H-14-111014 | DRAWING LIST / TITLE SHEET |
| REFERENCES | |
| NEXT USED ON SEE SHEET 1 | |

| REV SQ | DESCRIPTION |
|---|---|
| 0 | RELEASED PER EDT-882263 |
| REVISIONS | |

BLDG NO 241-A
INDEX NO 4750

CAUTION: NOT COMPLETE WITHOUT CURRENT CHANGE DOCUMENTS FROM DATABASE

| | NAME | DATE | COMPANY |
|---|---|---|---|
| DRAFTER | H A MENDEZ | 09/04/2019 | ARES |
| DRAFTING CHECKER | J R BYERS | 09/04/2019 | ARES |
| DESIGN ENGINEER | J F GALLEGOS | 09/04/2019 | ARES |
| DESIGN AUTHORITY | C H ANDERSON | 09/04/2019 | WRPS |

U.S. DEPARTMENT OF ENERGY
Office of River Protection

A-FARM RETRIEVAL
SLURRY DISTRIBUTOR BOX
GUARD RAIL ASSEMBLY

SIZE F | DRAWING NUMBER H-14-111029 | SHEET 4 | REV 00
SCALE SHOWN

13091

DOE_TB_F.DWG (MARCH 2019)