NOTES:
FOR GENERAL NOTES AND PARTS/MATERIAL LIST SEE SHEET 1.

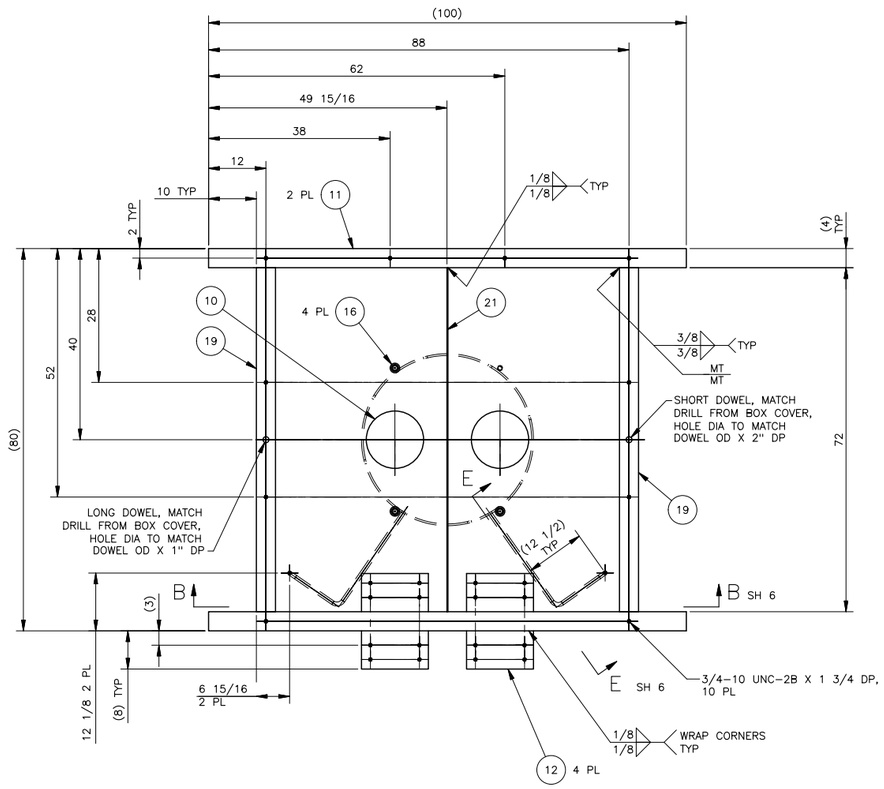

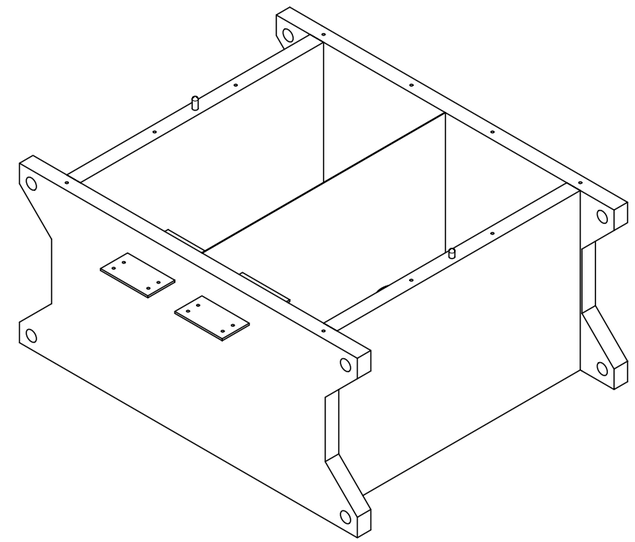

DISTRIBUTOR BOX WELDMENT ISOMETRIC
SCALE: NONE

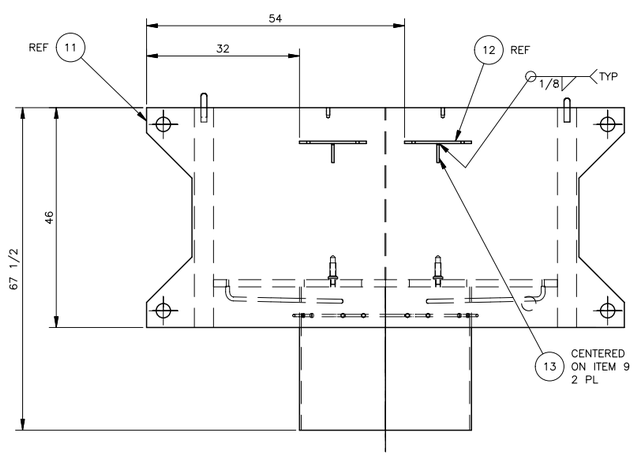

3 DISTRIBUTOR BOX WELDMENT
SCALE: 1/12

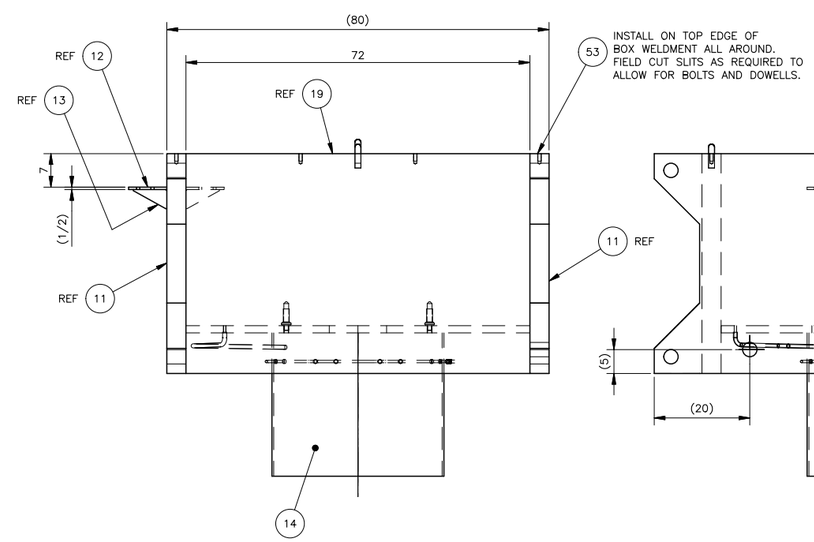

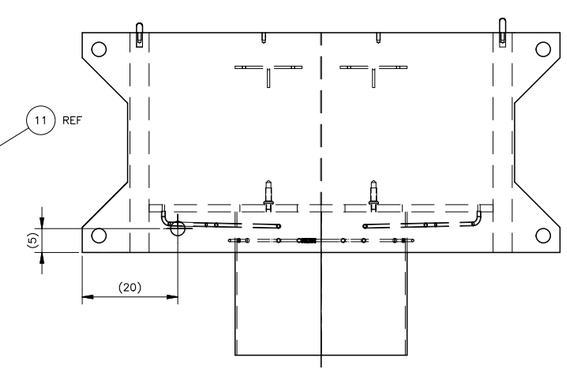

BACK VIEW

DATE: Sep 17, 2019 HANFORD RELEASE

DWG NUMBER	TITLE
DRAWING TRACEABILITY LIST	

REF NUMBER	TITLE
H-15-7	A-FARM WRS AP PIT MODELS
H-14-111014	DRAWING LIST / TITLE SHEET
REFERENCES	
NEXT USED ON SEE SHEET 1	

REV NO	DESCRIPTION
0	RELEASED PER EDT-882263
REVISIONS	

BLDG NO 241-A
INDEX NO 4750

CAUTION: NOT COMPLETE WITHOUT CURRENT CHANGE DOCUMENTS FROM DATABASE

	NAME	DATE	COMPANY
DRAFTER	H A MENDEZ	09/04/2019	ARES
DRAWING CHECKER	J R BYERS	09/04/2019	ARES
DESIGN ENGINEER	J F GALLEGOS	09/04/2019	ARES
DESIGN AUTHORITY	C H ANDERSON	09/04/2019	WRPS

U.S. DEPARTMENT OF ENERGY
Office of River Protection

A-FARM RETRIEVAL SLURRY DISTRIBUTOR BOX WELDMENT

SIZE	DRAWING NUMBER	SHEET	REV
F	H-14-111029	5	00

SCALE SHOWN

13094 DOE_TB_F.DWG (MARCH 2019)