NOTES:
FOR GENERAL NOTES AND PARTS/MATERIAL LIST SEE SHEET 1.

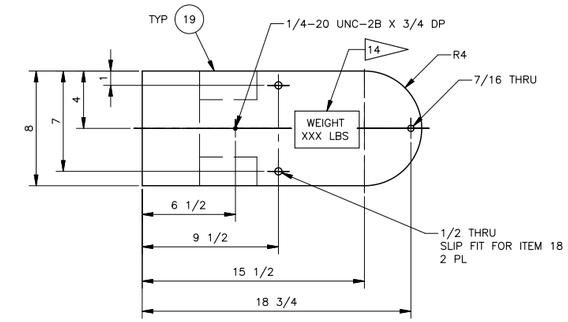

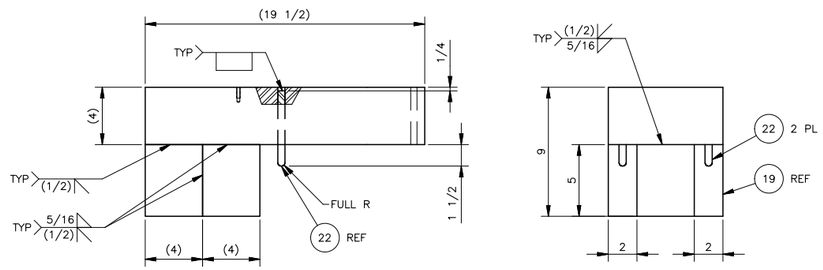

5 ACCESS COVER
SCALE: 1/2

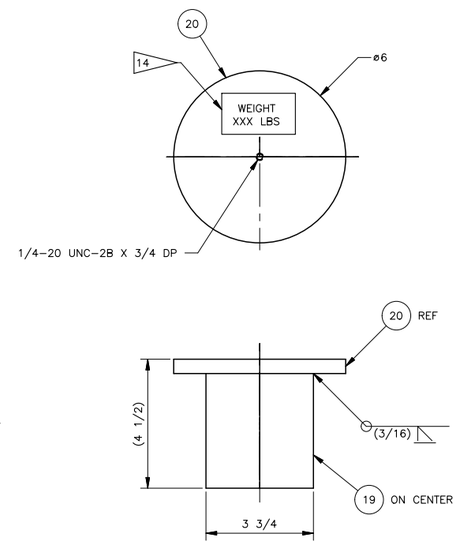

6 ACCESS PORT PLUG
SCALE: 1/2

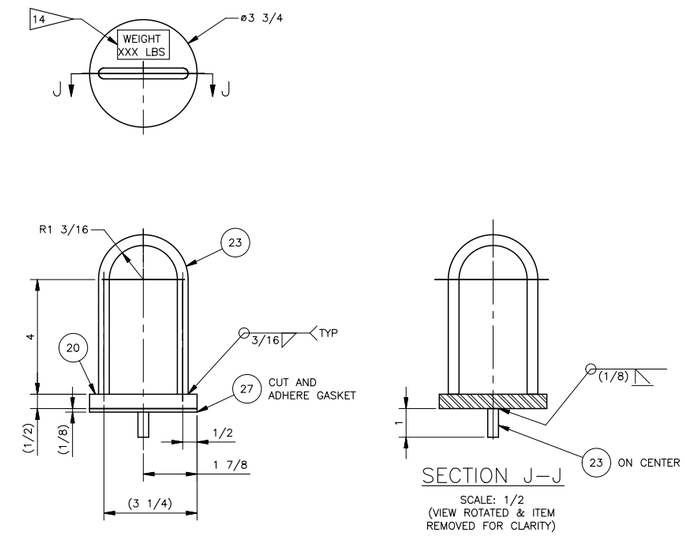

7 DRAIN PLUG
SCALE: 1/2

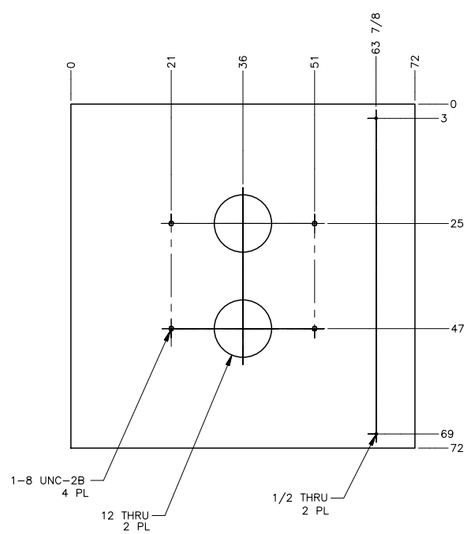

10 BASE PLATE
SCALE: 1/12

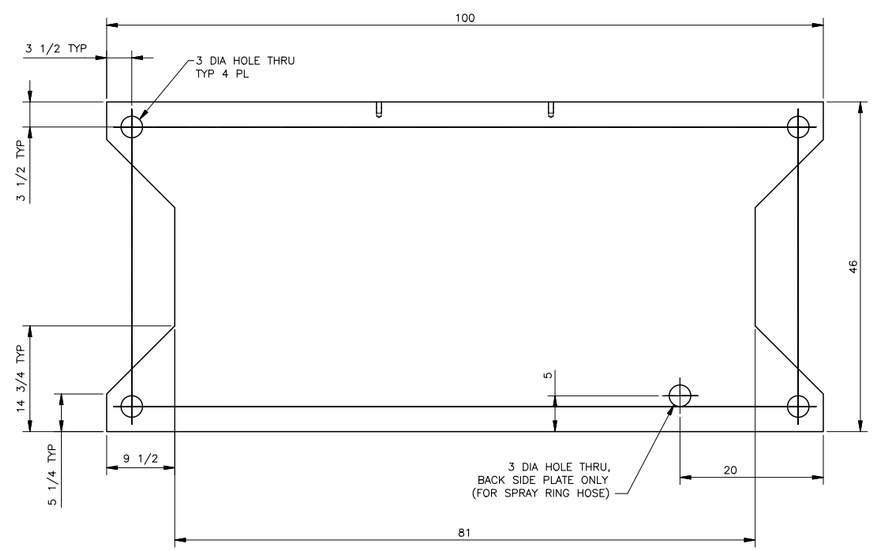

11 SIDE PLATE
SCALE: 1/8

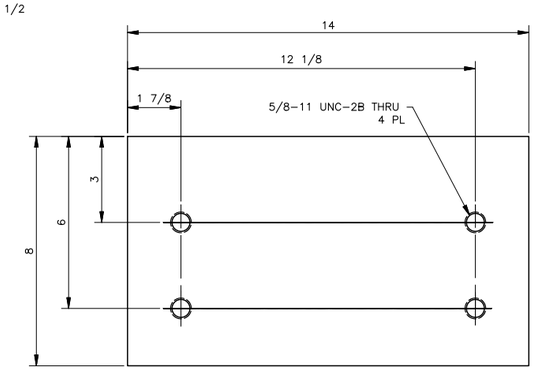

12 HOSE SUPPORT PLATE
SCALE: 1/2

DATE:
Sep 17, 2019
HANFORD RELEASE

DWG NUMBER	TITLE
DRAWING TRACEABILITY LIST	

REF NUMBER	TITLE
H-15-7	A-FARM WRS AP PIT MODELS
H-14-111014	DRAWING LIST / TITLE SHEET
REFERENCES	
NEXT USED ON SEE SHEET 1	

REV NO	DESCRIPTION
0	RELEASED PER EDT-882263
REVISIONS	

BLDG NO 241-A
INDEX NO 4750

CAUTION: NOT COMPLETE WITHOUT CURRENT CHANGE DOCUMENTS FROM DATABASE

	NAME	DATE	COMPANY
DRAFTER	H A MENDEZ	09/05/2019	ARES
DRAWING DESIGNER	J R BYERS	09/05/2019	ARES
DESIGN ENGINEER	J F GALLEGOS	09/05/2019	ARES
DESIGN AUTHORITY	C H ANDERSON	09/06/2019	WRPS

U.S. DEPARTMENT OF ENERGY
Office of River Protection

A-FARM RETRIEVAL SLURRY DISTRIBUTOR BOX DETAILS

SIZE F | DRAWING NUMBER H-14-111029 | SHEET 8 | REV 00
SCALE SHOWN

13090 DOE_TB_F.DWG (MARCH 2019)