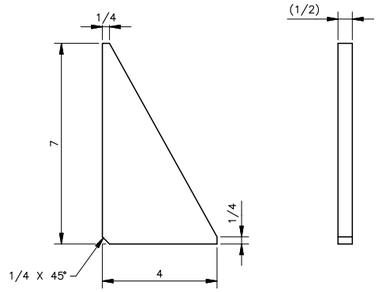

13 GUSSET PLATE
SCALE: 1/2

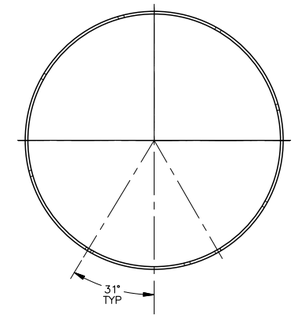

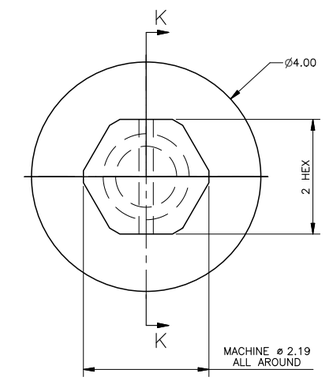

NOTES:
FOR GENERAL NOTES AND PARTS/MATERIAL LIST SEE SHEET 1.

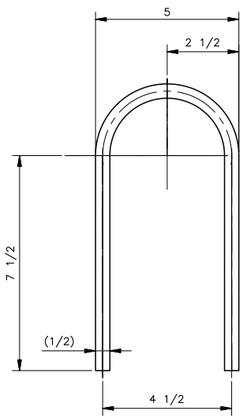

15 RAIN DAM
SCALE: 1/2

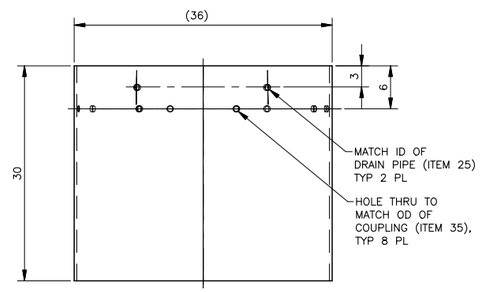

14 RISER SLEEVE
SCALE: 1/8

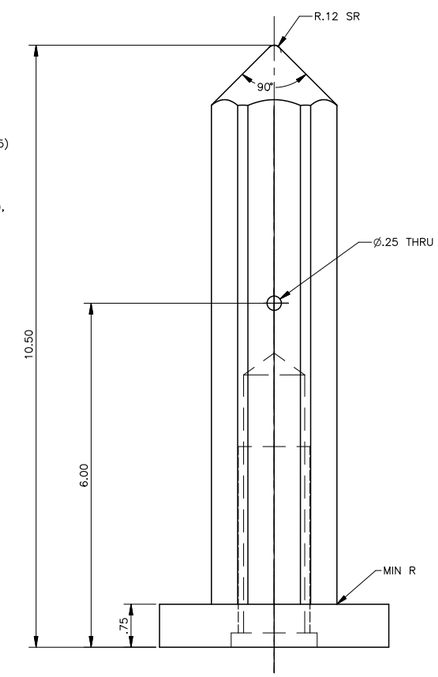

17 OPERATING NUT
SCALE: 1/1

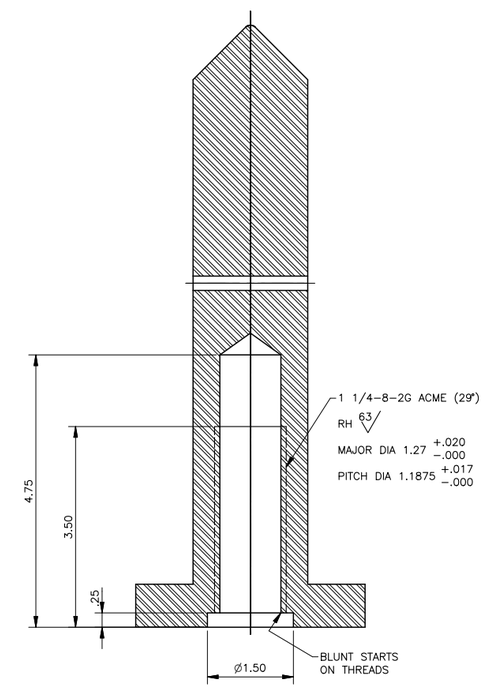

SECTION K-K
SCALE: 1/1

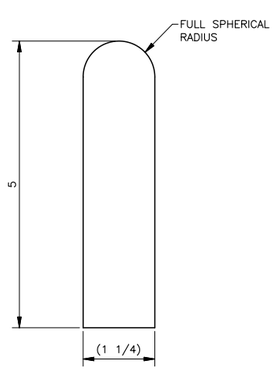

18 DOWEL PIN
SCALE: FULL

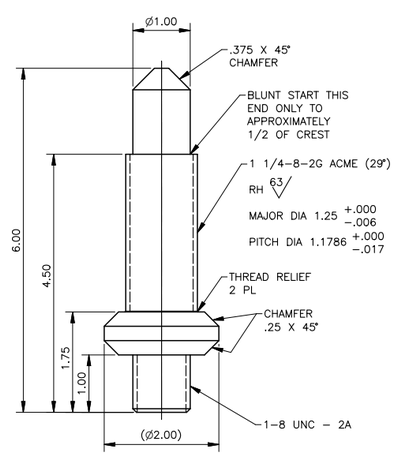

16 WELD SCREW
SCALE: 1/1

DATE:
Sep 17, 2019
HANFORD RELEASE

DWG NUMBER	TITLE
DRAWING TRACEABILITY LIST	

REF NUMBER	TITLE
H-15-7	A-FARM WRS AP PIT MODELS
H-14-111014	DRAWING LIST / TITLE SHEET
REFERENCES	
NEXT USED ON SEE SHEET 1	

REV NO	DESCRIPTION
0	RELEASED PER EDT-882263
REVISIONS	

BLDG NO 241-A
INDEX NO 4750

CAUTION: NOT COMPLETE WITHOUT CURRENT CHANGE DOCUMENTS FROM DATABASE

	NAME	DATE	COMPANY
DRAFTER	H A MENDEZ	09/05/2019	ARES
DRAWING CHECKER	J R BYERS	09/05/2019	ARES
DESIGN ENGINEER	J F GALLEGOS	09/05/2019	ARES
DESIGN AUTHORITY	C H ANDERSON	09/06/2019	WRPS

U.S. DEPARTMENT OF ENERGY
Office of River Protection

A-FARM RETRIEVAL
SLURRY DISTRIBUTOR BOX
DETAILS

SIZE	DRAWING NUMBER	SHEET	REV
F	H-14-111029	9	00

SCALE SHOWN

13096

DOE_TB_F.DWG (MARCH 2019)