NOTES:
FOR GENERAL NOTES AND PARTS/MATERIAL LIST SEE SHEET 1.

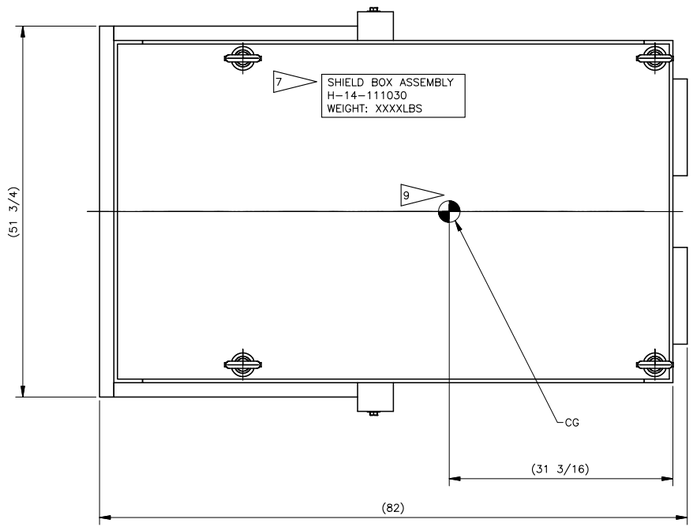


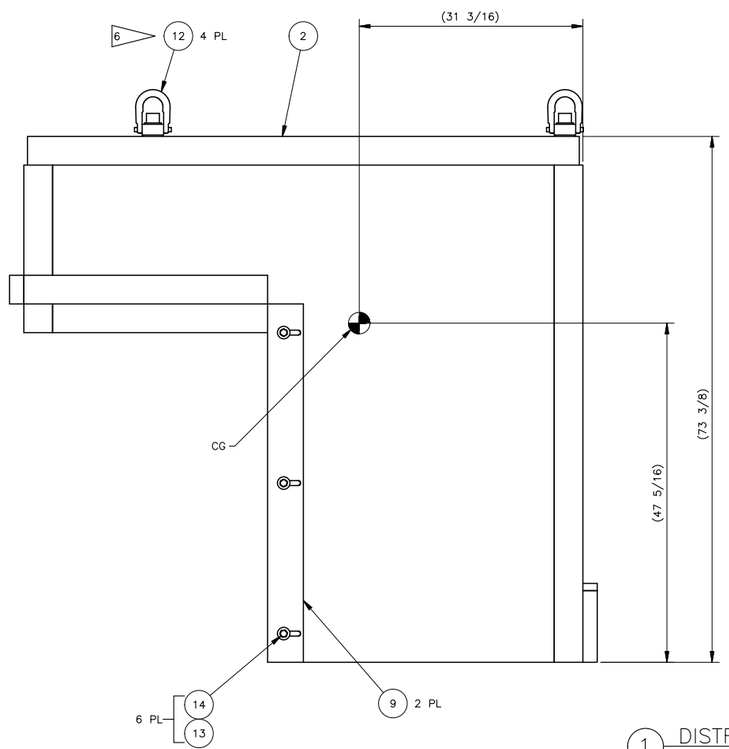


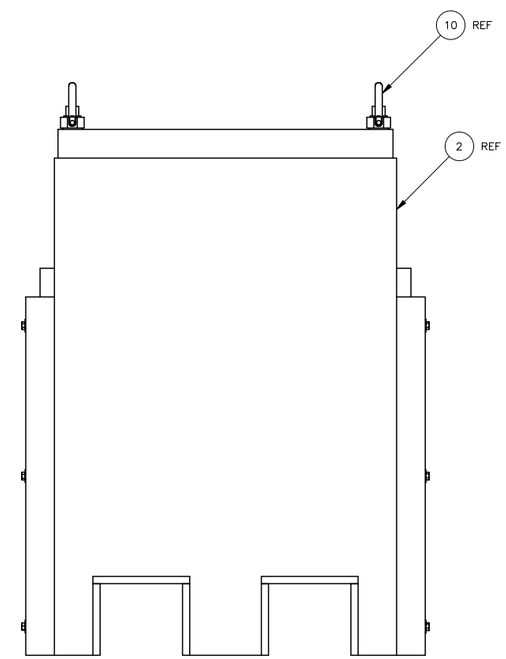


1 DISTRIBUTOR BOX SHIELD BOX ASSEMBLY
SCALE: 1/8

DATE:
Sep 17, 2019
HANFORD RELEASE

| DWG NUMBER | TITLE |
|---|---|
| DRAWING TRACEABILITY LIST | |

| REF NUMBER | TITLE |
|---|---|
| H-15-7 | A-FARM WRS AP PIT MODELS |
| H-14-111014 | DRAWING LIST & TITLE SHEET |
| REFERENCES | |
| NEXT USED ON SEE SHEET 1 | |

| REV NO. | DESCRIPTION |
|---|---|
| 0 | RELEASED PER EDT-882263 |
| REVISIONS | |

BLDG. NO. 241-A
INDEX NO. 4750

CAUTION: NOT COMPLETE WITHOUT CURRENT CHANGE DOCUMENTS FROM DATABASE

| | NAME | DATE | COMPANY |
|---|---|---|---|
| DRAFTER | H A MENDEZ | 09/04/2019 | ARES |
| DRAFTING CHECKER | J R BYERS | 09/04/2019 | ARES |
| DESIGN ENGINEER | T R BYERS | 09/02/2019 | ARES |
| DESIGN AUTHORITY | C H ANDERSON | 09/16/2019 | WRPS |

U.S. DEPARTMENT OF ENERGY
Office of River Protection

A-FARM RETRIEVAL
DISTRIBUTOR BOX
SHIELD BOX ASSEMBLY

| SIZE | DRAWING NUMBER | SHEET | REV |
|---|---|---|---|
| F | H-14-111030 | 2 | 00 |

SCALE SHOWN

12261 DOE_TB_F.DWG (MAY 2018)