NOTES:
FOR GENERAL NOTES AND PARTS/MATERIAL LIST SEE SHEET 1.

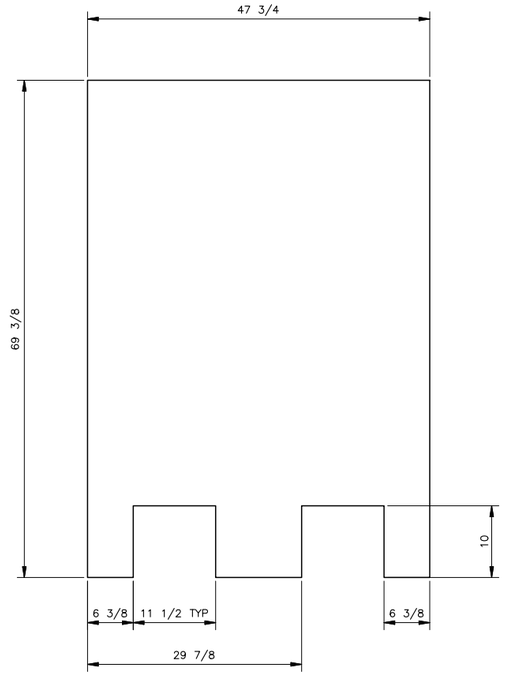

4 FRONT PLATE
SCALE: 1/8

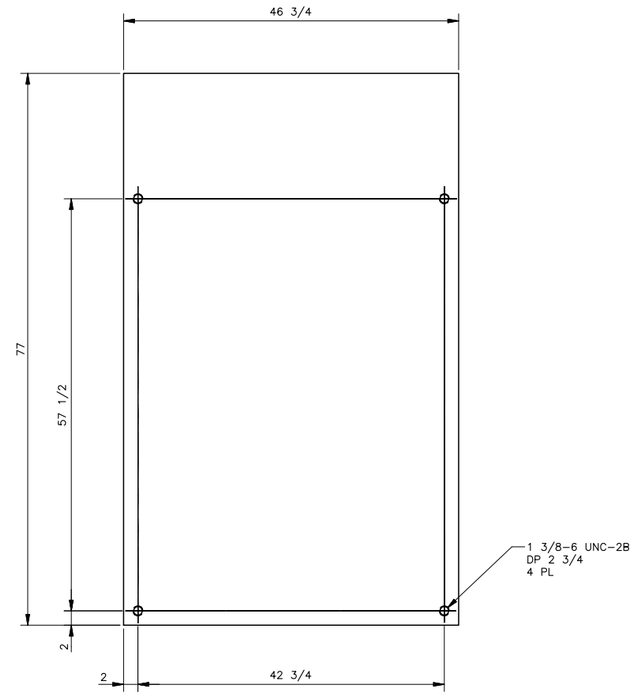

5 TOP PLATE
SCALE: 1/8

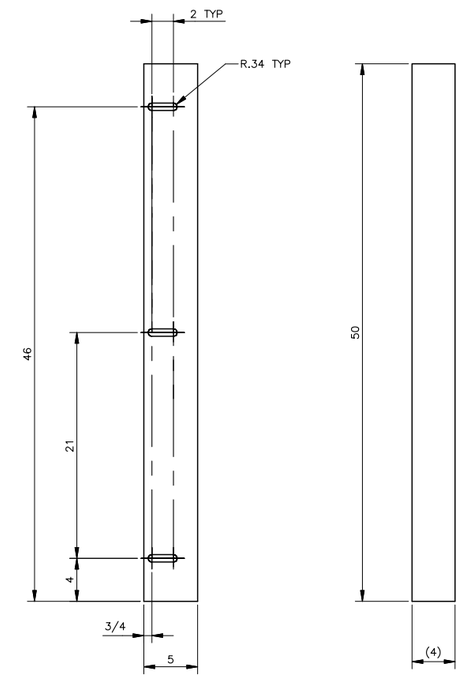

9 ADJUSTABLE BAR
SCALE: 3/16

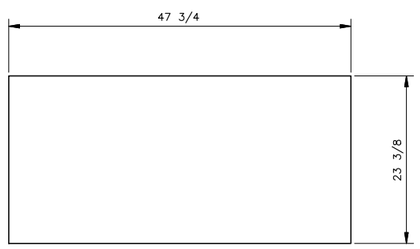

6 BACK PLATE
SCALE: 1/8

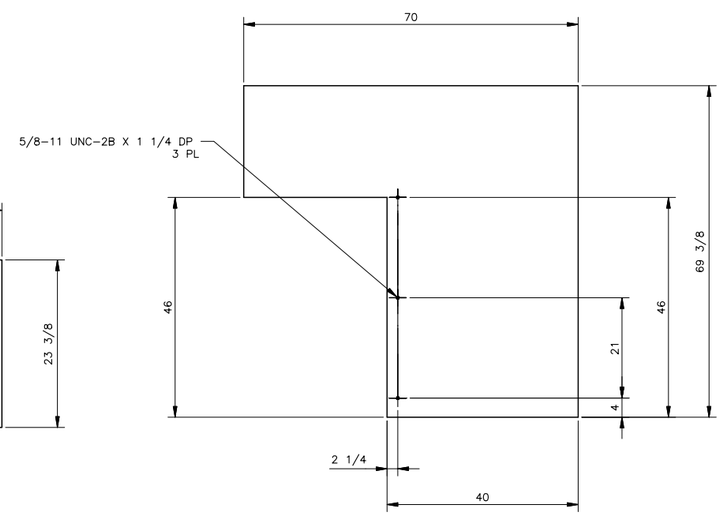

7 LEFT SIDE PLATE
SCALE: 1/12

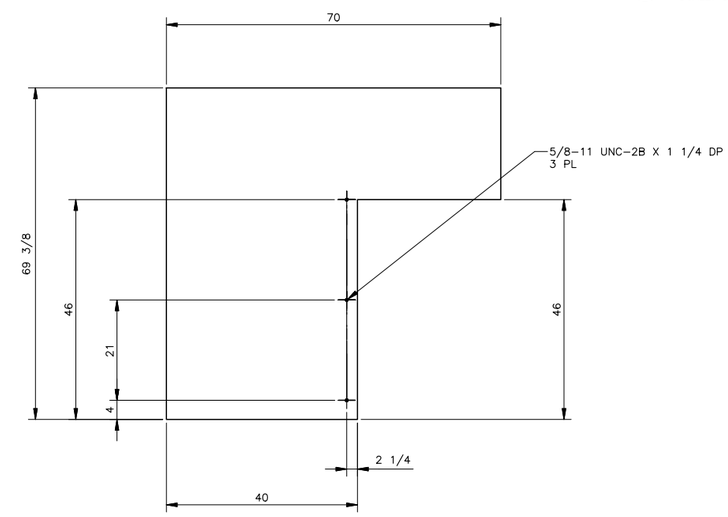

8 RIGHT SIDE PLATE
SCALE: 1/12

DATE:
Sep 17, 2019
HANFORD RELEASE

DWG NUMBER	TITLE
DRAWING TRACEABILITY LIST	

REF NUMBER	TITLE
H-15-7	A-FARM WRS AP PIT MODELS
H-14-111014	DRAWING LIST & TITLE SHEET
REFERENCES	
NEXT USED ON SEE SHEET 1	

REV NO.	DESCRIPTION
0	RELEASED PER EDT-882263
REVISIONS	

BLDG. NO. 241-A
INDEX NO. 4750

CAUTION: NOT COMPLETE WITHOUT CURRENT CHANGE DOCUMENTS FROM DATABASE

	NAME	DATE	COMPANY
DRAFTER	H A MENDEZ	09/04/2019	ARES
DRAWING CHECKER	J R BYERS	09/04/2019	ARES
DESIGN ENGINEER	I R BYERS	09/05/2019	ARES
DESIGN AUTHORITY	C H ANDERSON	09/16/2019	WRPS

U.S. DEPARTMENT OF ENERGY
Office of River Protection

A-FARM RETRIEVAL
DISTRIBUTOR BOX
SHIELD BOX DETAILS

SIZE	DRAWING NUMBER	SHEET	REV
F	H-14-111030	4	00

SCALE SHOWN

12218 DOE_TB_F.DWG (MAY 2018)