NOTES:
FOR GENERAL NOTES AND PARTS/MATERIAL LIST, SEE SHEET 1

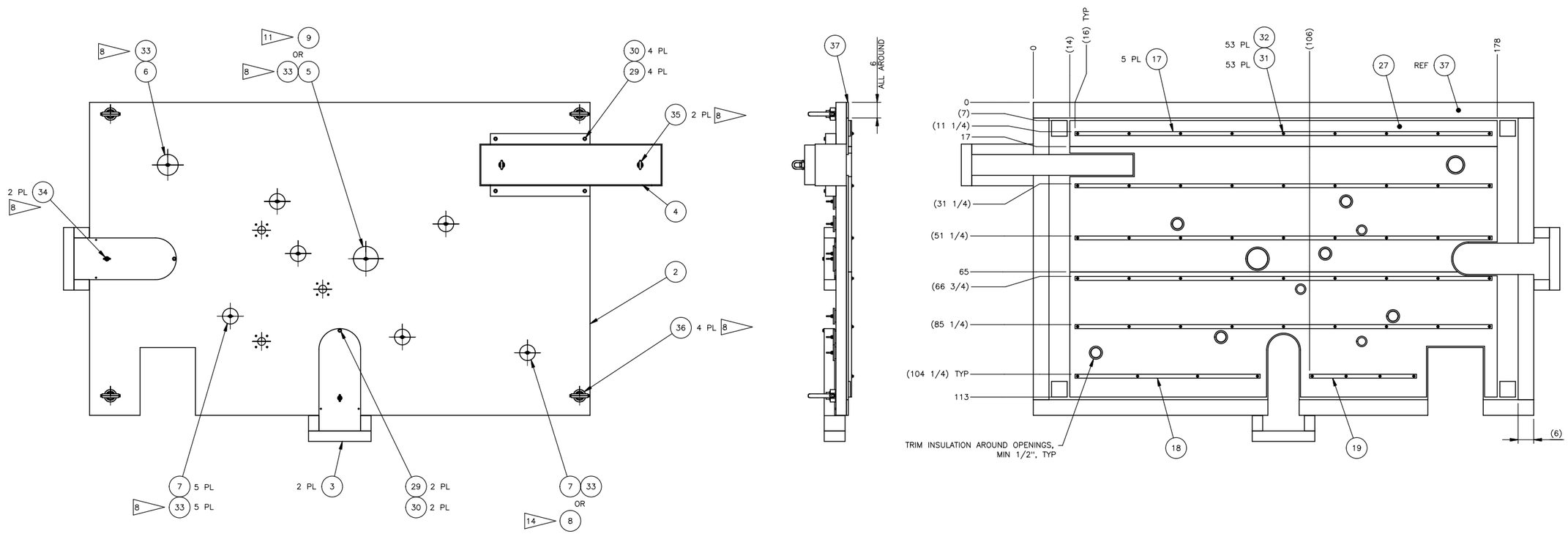

1 PUMP PIT AP-01A COVER PLATE ASSEMBLY
SCALE: 1/16

DATE:
Sep 09, 2020
HANFORD RELEASE

DWG NUMBER	TITLE
DRAWING TRACEABILITY LIST	

REF NUMBER	TITLE
H-15-7	A-FARM WRS AP PIT MODELS
H-14-111014	DRAWING LIST & TITLE SHEET
REFERENCES	
NEXT USED ON SEE SHEET 1	

REV NO.	DESCRIPTION
1	REVISED PER EDT-882693
REVISIONS	

BLDG. NO. 241-AP-01A
INDEX NO. 9901

CAUTION: NOT COMPLETE WITHOUT CURRENT CHANGE DOCUMENTS FROM DATABASE

	NAME	DATE	COMPANY
DRAFTER	H A MENDEZ	08/26/2020	ARES
DRAFTING CHECKER	S A SNODGRASS	08/26/2020	ARES
ENGINEERING PEER REVIEWER	A R HAGENSEN	08/14/2020	ARES
DESIGN ENGINEER	T R BYERS	08/26/2020	ARES
DESIGN AUTHORITY	C H ANDERSON	08/03/2020	WRPS

U.S. DEPARTMENT OF ENERGY
Office of River Protection

A-FARM RETRIEVAL
AP-01A COVER PLATE
ASSEMBLY

SIZE F | DRAWING NUMBER H-14-111032 | SHEET 2 | REV 01
SCALE SHOWN

DOE_TB_F.DWG (MAY 2018)