NOTES:
FOR GENERAL NOTES AND PARTS/MATERIAL LIST, SEE SHEET 1

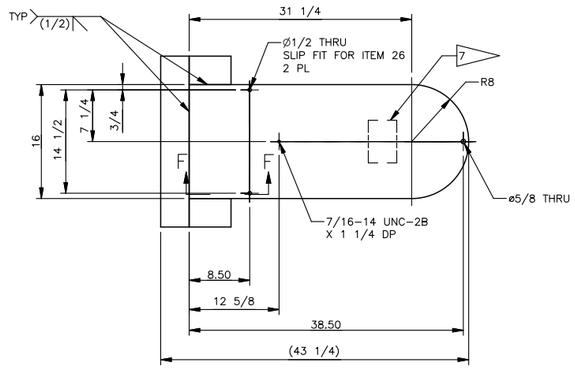

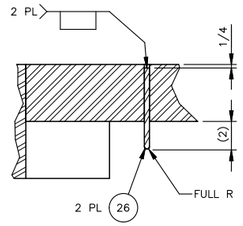

SECTION F-F
SCALE: 1/4

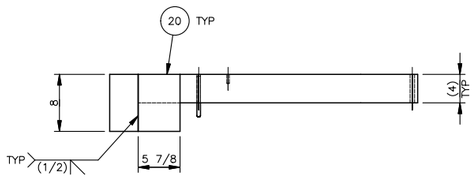

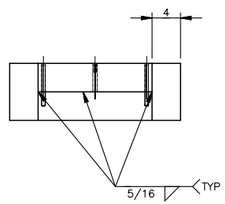

3 ACCESS COVER
SCALE: 1/8

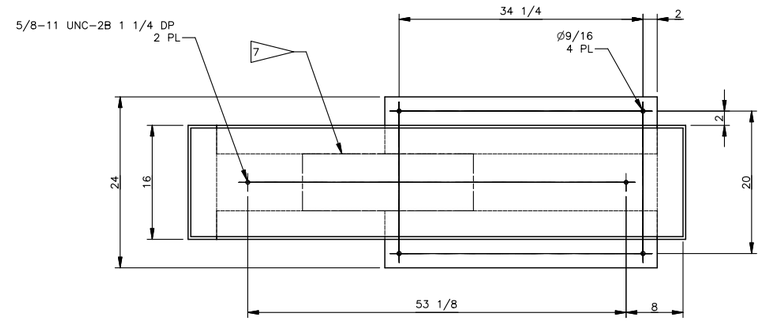

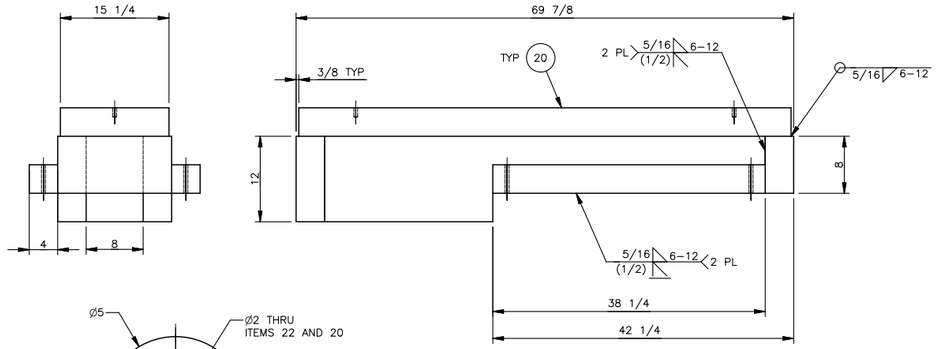

4 SLOT COVER
SCALE: 1/8

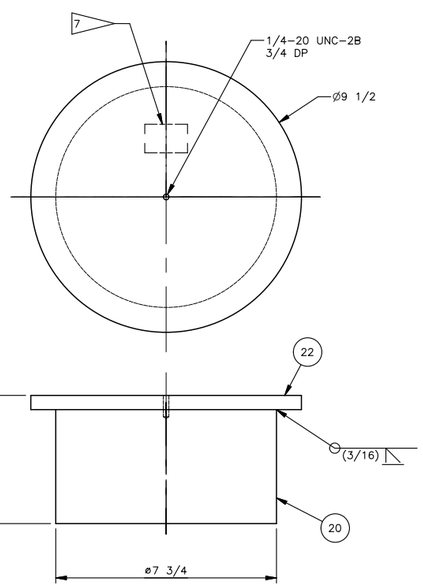

5 8IN ACCESS PORT PLUG
SCALE: 1/2

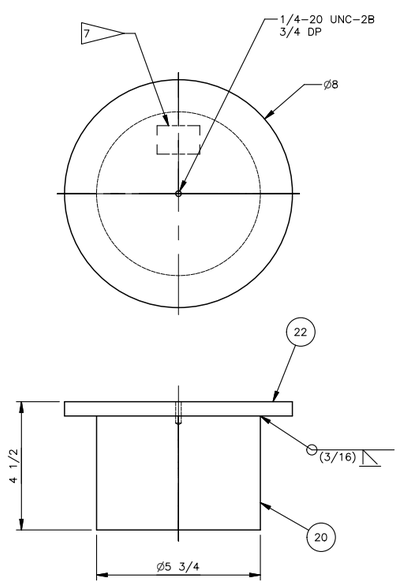

6 6IN ACCESS PORT PLUG
SCALE: 1/2

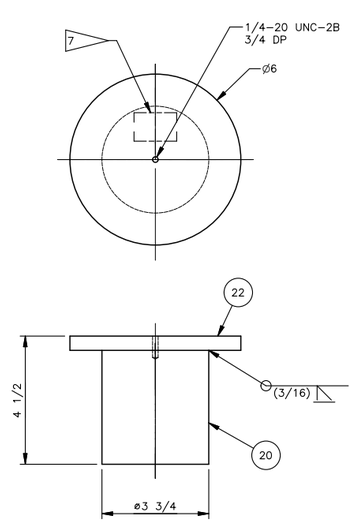

7 4IN ACCESS PORT PLUG
SCALE: 1/2

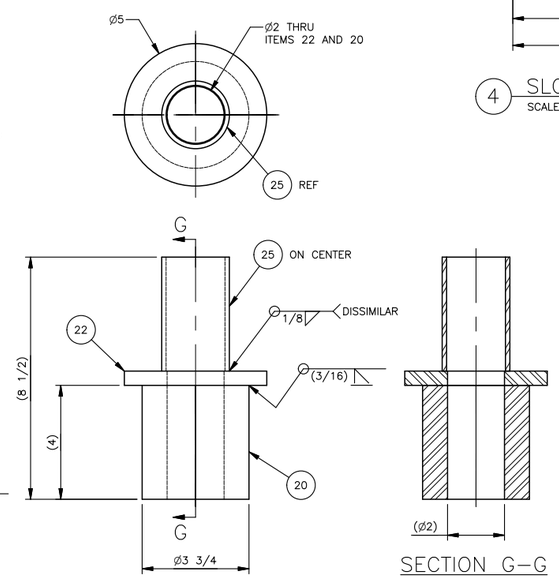

SECTION G-G
SCALE: 1/2

8 THERMOCOUPLE TREE SHIELD PLUG
SCALE: 1/2

DATE:
Sep 09, 2020
HANFORD RELEASE

DWG NUMBER	TITLE
DRAWING TRACEABILITY LIST	

REF NUMBER	TITLE
H-15-7	A-FARM WRS AP PIT MODELS
H-14-111014	DRAWING LIST & TITLE SHEET
REFERENCES	
NEXT USED ON SEE SHEET 1	

REV NO.	DESCRIPTION
1	REVISED PER EDT-882693
REVISIONS	

BLDG. NO. 241-AP-01A
INDEX NO. 9901

CAUTION: NOT COMPLETE WITHOUT CURRENT CHANGE DOCUMENTS FROM DATABASE

	NAME	DATE	COMPANY
DRAFTER	H A MENDEZ	09/04/2020	ARES
DRAFTING SUPERVISOR	S A SNODGRASS	09/04/2020	ARES
ENGINEERING PEER REVIEWER	A R HAGENSEN	09/04/2020	ARES
DESIGN ENGINEER	T R BYERS	09/04/2020	ARES
DESIGN AUTHORITY	C H ANDERSON	09/09/2020	WRPS

U.S. DEPARTMENT OF ENERGY
Office of River Protection

A-FARM RETRIEVAL
AP-01A COVER PLATE
DETAILS

SIZE	DRAWING NUMBER	SHEET	REV
F	H-14-111032	4	01

SCALE SHOWN

DOE_TB_F.DWG (MAY 2018)