NOTES:
FOR GENERAL NOTES AND PARTS/MATERIAL LIST, SEE SHEET 1

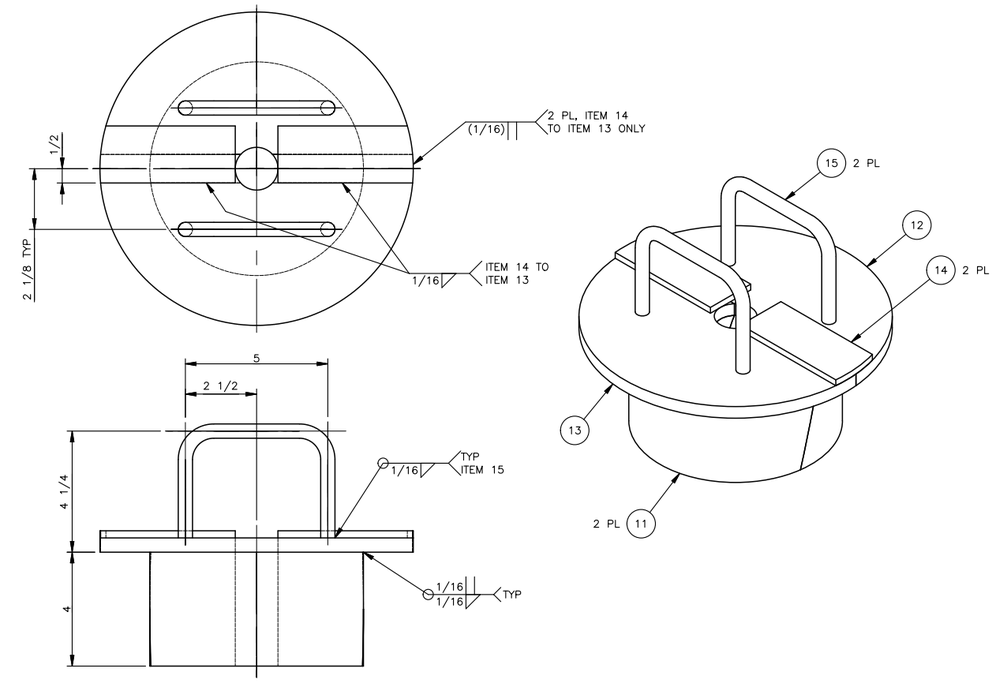


12 11 9 8IN SPLIT SHIELD PLUG
SCALE: 1/2

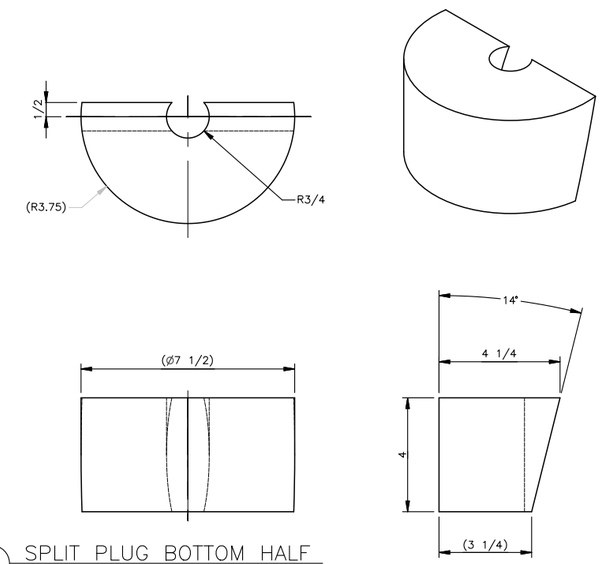


11 SPLIT PLUG BOTTOM HALF
SCALE: 1/2

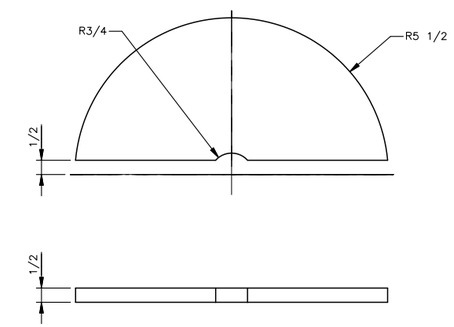


12 SPLIT PLUG TOP HALF A
SCALE: 1/2

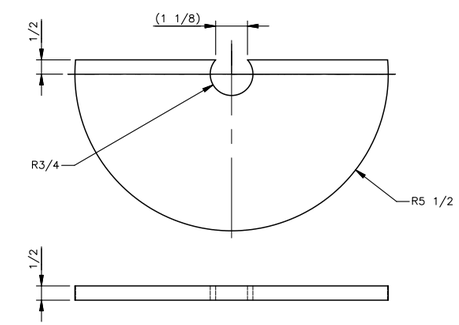


13 SPLIT PLUG TOP HALF B
SCALE: 1/2

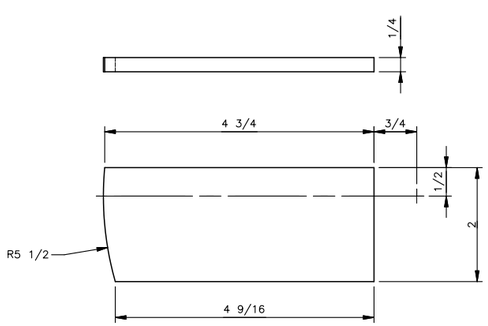


14 SPLIT PLUG GAP COVER
SCALE: FULL

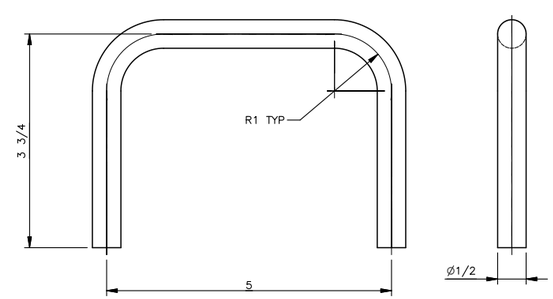


15 HANDLE
SCALE: FULL

DATE:
Sep 09, 2020
HANFORD RELEASE

| DWG NUMBER | TITLE |
|---|---|
| DRAWING TRACEABILITY LIST | |

| REF NUMBER | TITLE |
|---|---|
| H-15-7 | A-FARM WRS AP PIT MODELS |
| H-14-111014 | DRAWING LIST & TITLE SHEET |
| REFERENCES | |
| NEXT USED ON SEE SHEET 1 | |

| REV NO. | DESCRIPTION |
|---|---|
| 1 | REVISED PER EDT-882693 |
| REVISIONS | |

BLDG. NO. 241-AP-01A
INDEX NO. 9901

CAUTION: NOT COMPLETE WITHOUT CURRENT CHANGE DOCUMENTS FROM DATABASE

| | NAME | DATE | COMPANY |
|---|---|---|---|
| DRAFTER | H A MENDEZ | 10/24/2018 | ARES |
| DRAFTING ENGINEER | S A SNODGRASS | 10/24/2018 | ARES |
| ENGINEERING PROB. NUMBER ENGINEER | A R HAGENSEN | 10/24/2018 | ARES |
| DESIGN ENGINEER | T R BYERS | 10/24/2018 | ARES |
| DESIGN AUTHORITY | C H ANDERSON | 10/24/2018 | WRPS |

U.S. DEPARTMENT OF ENERGY
Office of River Protection

A-FARM RETRIEVAL
AP-01A COVER PLATE
DETAILS

| SIZE | DRAWING NUMBER | SHEET | REV |
|---|---|---|---|
| F | H-14-111032 | 5 | 01 |

SCALE SHOWN

DOE_TB_F.DWG (MAY 2018)