NOTES:
FOR GENERAL NOTES AND PARTS/MATERIAL LIST, SEE SHEET 1

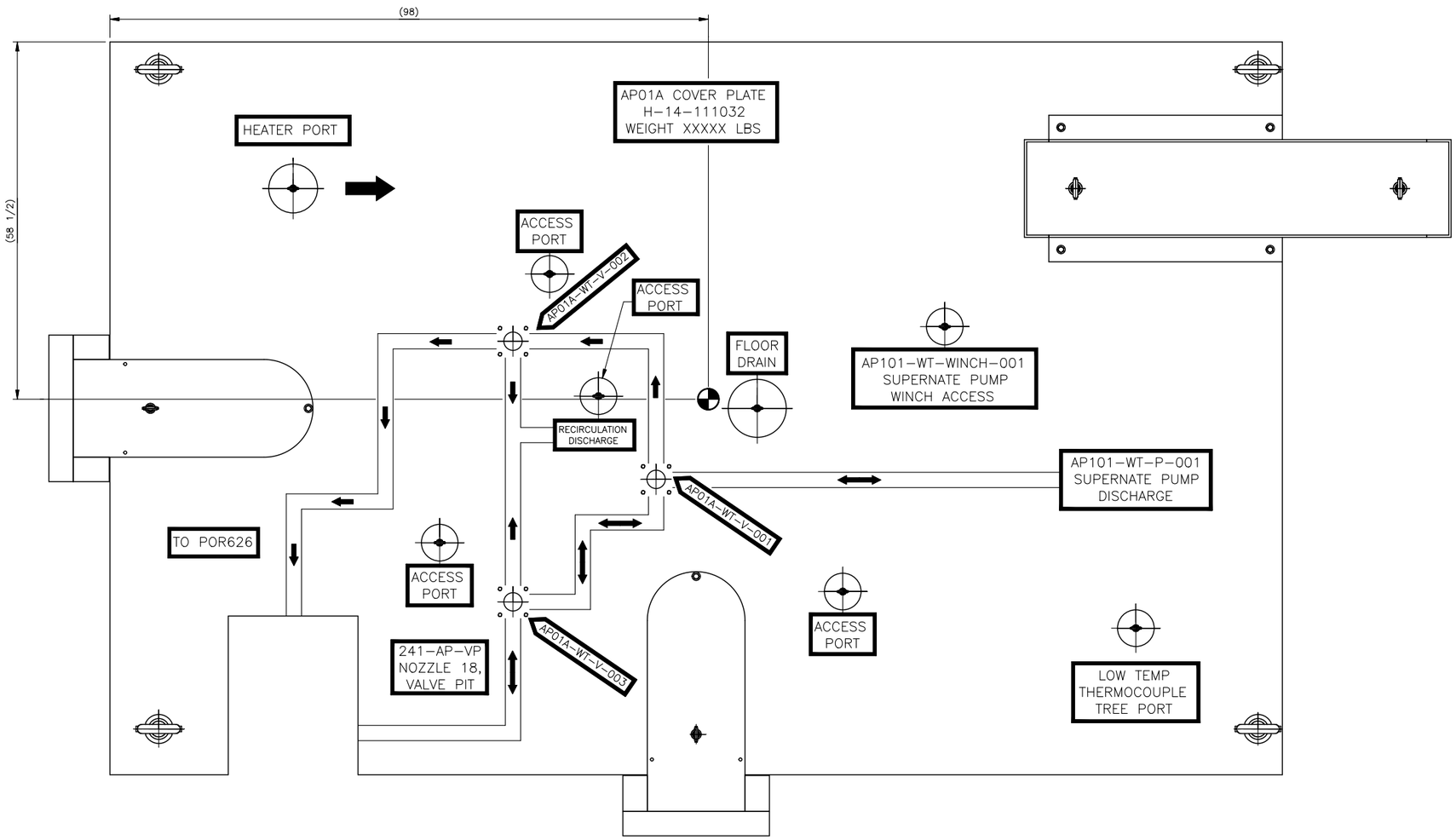

AP-01A PUMP PIT COVER PLATE PAINT DIAGRAM
SCALE: 1/8

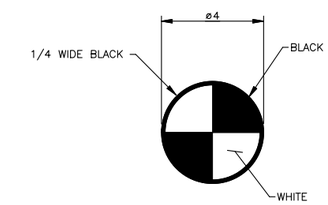

CENTER OF GRAVITY LABEL
SCALE: 1/2

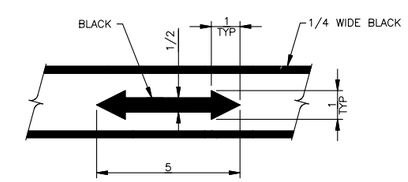

FLOW ARROW AND STRIPE LABEL
SCALE: 1/2

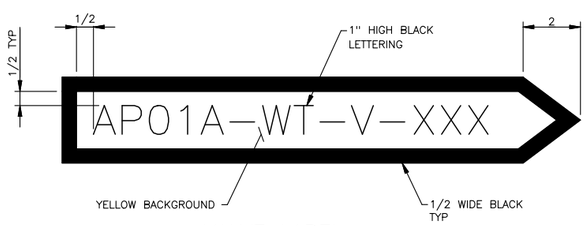

VALVE LABEL
SCALE: 1/2

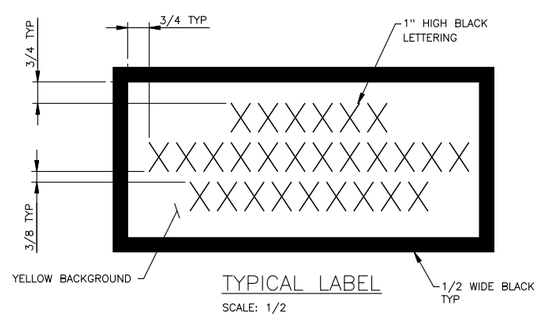

TYPICAL LABEL
SCALE: 1/2

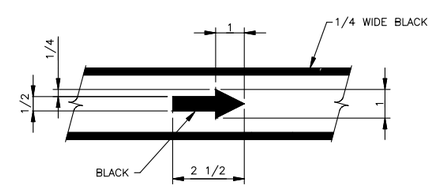

FLOW ARROW AND STRIPE LABEL
SCALE: 1/2

DATE:
Sep 09,2020
HANFORD RELEASE

DWG NUMBER	TITLE

DRAWING TRACEABILITY LIST

REF NUMBER	TITLE
H-15-7	A-FARM WRS AP PIT MODELS
H-14-111014	DRAWING LIST & TITLE SHEET

REFERENCES
NEXT USED ON SEE SHEET 1

REV NO.	DESCRIPTION
0	RELEASED PER EDT-882693

REVISIONS

BLDG. NO. 241-AP-01A
INDEX NO. 9901

CAUTION: NOT COMPLETE WITHOUT CURRENT CHANGE DOCUMENTS FROM DATABASE

	NAME	DATE	COMPANY
DRAFTER	H A MENDEZ	09/01/2020	ARES
DRAFTING CHECKER	S A SNODGRASS	09/01/2020	ARES
ENGINEERING PEER REVIEWER	A R HAGENSEN	09/01/2020	ARES
DESIGN ENGINEER	T R BYERS	09/01/2020	ARES
DESIGN AUTHORITY	C H ANDERSON	09/01/2020	WRPS

U.S. DEPARTMENT OF ENERGY
Office of River Protection

A-FARM RETRIEVAL
AP-01A COVER PLATE
PAINT DETAILS

SIZE F | DRAWING NUMBER H-14-111032 | SHEET 7 | REV 00
SCALE SHOWN

DOE_TB_F.DWG (MAY 2018)