NOTES:
FOR GENERAL NOTES AND PARTS/MATERIAL LIST, SEE SHEET 1.

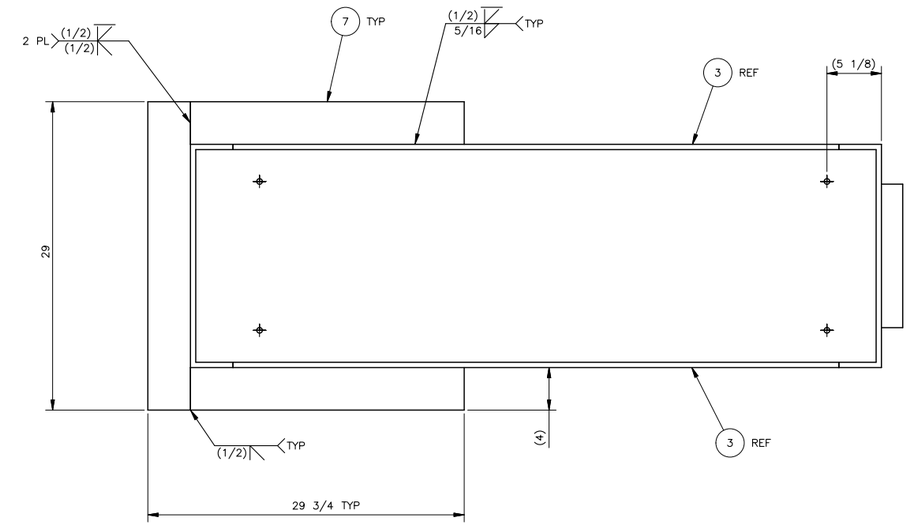

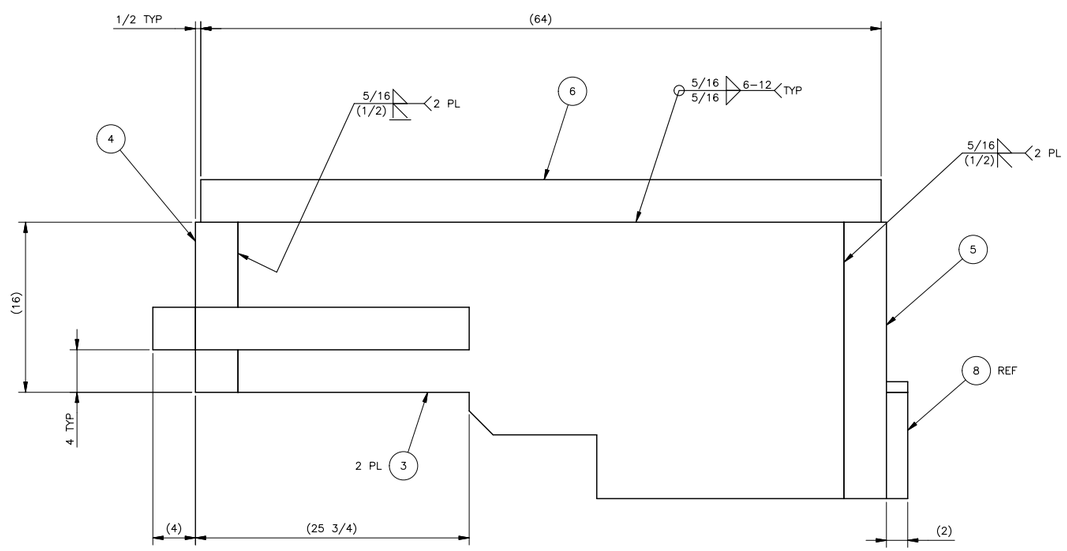

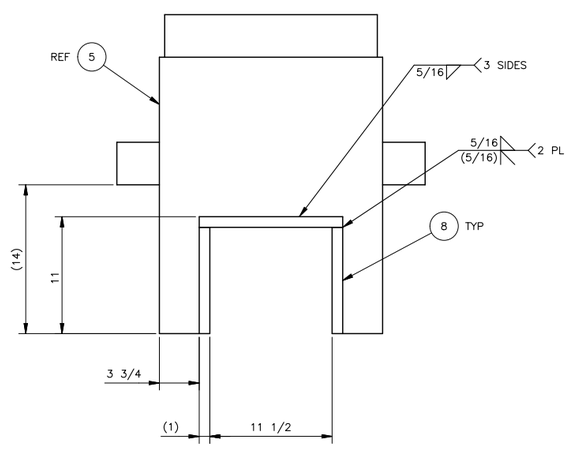

2 SHIELD BOX WELDMENT
SCALE: 3/16

DATE: Sep 19,2019 HANFORD RELEASE

DWG NUMBER	TITLE
DRAWING TRACEABILITY LIST	

REF NUMBER	TITLE
H-15-7	A-FARM WRS AP PIT MODELS
H-14-111014	DRAWING LIST & TITLE SHEET
REFERENCES	
NEXT USED ON SHEET 1	

REV NO.	DESCRIPTION
0	RELEASED PER EDT-882262
REVISIONS	

BLDG. NO. 241-A
INDEX NO. 4750

CAUTION: NOT COMPLETE WITHOUT CURRENT CHANGE DOCUMENTS FROM DATABASE

	NAME	DATE	COMPANY
DRAFTER	H A MENDEZ	09/19/2019	ARES
DRAFTING CHECKER	J R BYERS	09/19/2019	ARES
DESIGN ENGINEER	T R BYERS	09/20/2019	ARES
DESIGN AUTHORITY	C H ANDERSON	09/19/2019	WRPS

U.S. DEPARTMENT OF ENERGY
Office of River Protection

A-FARM RETRIEVAL
SUPERNATE PUMP PIT
SHIELD BOX WELDMENT

SIZE F | DRAWING NUMBER H-14-111034 | SHEET 3 | REV 00
SCALE SHOWN

13971 DOE_TB_F.DWG (MAY 2018)