MEASURING ELEMENTS:

- FLOW ORIFICE
- LEVEL GAGE GLASS, FLOAT, MAGNETIC, DISPLACEMENT OR DIFFERENTIAL-PRESSURE TYPE LEVEL INSTRUMENTS XX - INDICATES THE TYPE
- VARIABLE AREA FLOW METER (ROTAMETER)
- FLOW INDICATOR VALVED (ROTAMETER WITH ATTACHED VALVE)
- TEMPERATURE ELEMENT (WITH WELL)
- INLINE FLOW INSTRUMENT XX - METER TYPE
- PITOT OR PITOT- VENTURI TUBE FLOW METER
- AVERAGING PITOT TUBE FLOW METER
- DIRECT CONNECTED PRESSURE SENSOR
- PRESSURE SENSOR WITH DIAPHRAGM SEAL, PIPED

MISCELLANEOUS SYMBOLS:

- DIAPHRAGM SEAL
- LEVEL ELEMENT / LEAK DETECTION ELEMENT
- RUPTURE DISK (PRESSURE RELIEF)
- BELL (ALARM)
- TEMPERATURE SENSING ELEMENT
- RADIATION SENSING ELEMENT
- INLINE RADIATION ELEMENT
- ALARM HORN
- AIRSET
- RADAR LEVEL SENSOR
- TURBINE OR PROPELLER FLOW METER
- GENERIC FLOW METER
- CORIOLIS FLOW METER
- FLOW NOZZLE
- ULTRASONIC FLOW METER
- VIDEO CAMERA
- VORTEX METER
- CCTV CAMERA
- MAGNETIC FLOW METER
- PRESSURE OR VACUUM RELIEF (ANGLE PATTERN)
- INLINE PRESSURE OR VACUUM RELIEF
- 3-VALVE INSTRUMENT MANIFOLD

I ORF O (R) CONVENTIONAL

RELIEF VALVE WITH DETAILS:

- I INLET SIZE
- ORF ORFICE SIZE
- O OUTLET SIZE
- (R) RELIEF CONDITION NOMENCLATURE:
  - F = FIRE
  - B = BLOCKED OUTLET
  - C = CONTROL FAILURE
  - P = PROCESS
  - M = MECHANICAL FAILURE
  - T = THERMAL EXPANSION
  - R = REVERSE FLOW

PILOT OPERATED RELIEF VALVE

VALVE ACTUATORS:

- DIAPHRAGM OPERATED
- DIAPHRAGM OPERATED WITH HANDWHEEL
- HAND OPERATED OR HANDWHEEL
- PNEUMATIC PISTON (SINGLE ACTING)
- PNEUMATIC PISTON WITH HANDWHEEL
- PNEUMATIC PISTON (DOUBLE ACTING)
- MOTOR OPERATED
- MOTOR OPERATED VALVE W/ MANUAL OVER-RIDE
- AIR OPERATED
- SOLENOID
- 3-WAY SOLENOID
- 4-WAY SOLENOID
- 4-WAY DUAL SOLENOID
- BACK PRESSURE REGULATOR (SELF CONTAINED)
- PRESSURE REDUCING REGULATOR (SELF CONTAINED)
- PRESSURE REDUCING REGULATOR WITH EXTERNAL PRESSURE TAP
- BACK PRESSURE REDUCING REGULATOR WITH EXTERNAL PRESSURE TAP
- DIAPHRAGM OPERATED W/ POSITIONER
- PNEUMATIC PISTON (SINGLE ACTING) W/ POSITIONER

INSTRUMENT SYMBOL LETTER IDENTIFICATION TABLE

SYMBOL	FIRST LETTER: MEASURED OR INITIATING VARIABLE	FIRST LETTER: MODIFIER	SUCCEEDING LETTERS: READOUT OR PASSIVE FUNCTION	SUCCEEDING LETTERS: OUTPUT FUNCTION	SUCCEEDING LETTERS: MODIFIER
A	ANALYSIS		ALARM		
C	CONDUCTIVITY			CONTROL	
D	DENSITY	DIFFERENTIAL			
E	VOLTAGE		ELEMENT		
F	FLOW				
G			GLASS		
H	HAND (MANUALLY INITIATED)				HIGH
I	CURRENT		INDICATE		
J	POWER				
K	TIME				
L	LEVEL		LIGHT		LOW
M	MOISTURE				
O			ORIFICE, RESTRICTION		
P	PRESSURE, VACUUM				
Q	STATUS	TOTALIZE			
R	RADIATION		RECORDER		
S	SPEED	SAFETY		SWITCH	
SG	SPECIFIC GRAVITY				
T	TEMPERATURE			TRANSMIT	
U	MULTIVARIABLE				
V	VIBRATION			VALVE	
W	WEIGHT OR FORCE (STRAIN)		WELL		
WF	WEIGHT FACTOR				
X	TROUBLE	FAILURE			FAILURE
Y	EVENT, STATE OR PRESENCE			RELAY, COMPUTE, CONVERT	
Z	POSITION			ACTUATOR	

INSTRUMENT SYMBOLS:

- PRIMARY ELEMENT OR LOCALLY MOUNTED INSTRUMENT
- ANNUNCIATOR CABINET OR PANEL MOUNTED INSTRUMENT
- INSTRUMENT MOUNTED ON BACK OF PANEL (INACCESSIBLE)
- INSTRUMENT MOUNTED AT AN AUXILIARY LOCATION
- RELAY
- POWER RELAY
- HARDWARE INTERLOCK
- COMPUTER INPUT / OUTPUT
- STATUS LIGHT, BEACON W = WHITE, R = RED, G = GREEN
- SOFTWARE INTERLOCK
- CONTROLLER (YYC FOR DCS PLC FOR PLC)
- DCS SHARED DISPLAY NOT NORMALLY ACCESSIBLE
- DCS MONITORING FUNCTION ACCESSIBLE IN AUXILLARY LOCATION (PANEL HMI)
- DCS CONTROL OR MONITORING FUNCTION ACCESSIBLE TO THE OPERATOR

DETAIL 1A: ON / OFF PNEUMATIC ACTUATED, DCS / PLC CONTROL

NOTE 6

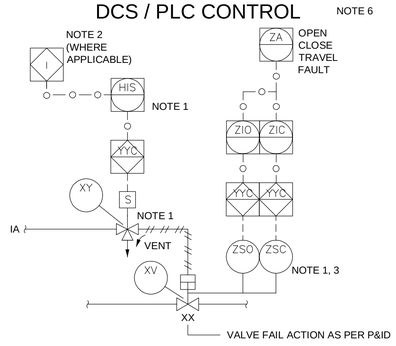

DETAIL 1B: THREE - WAY PNEUMATIC ACTUATED, DCS / PLC CONTROL

NOTE 6

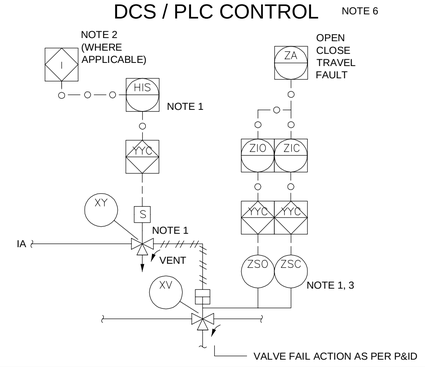

DETAIL 1C: MODULATING PNEUMATIC ACTUATED, DCS / PLC CONTROL

NOTE 6

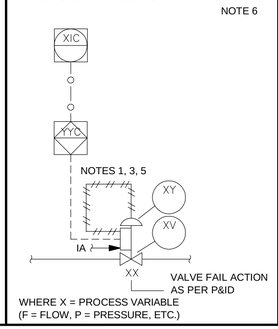

DETAIL 1D: ON/OFF PNEUMATIC ACTUATED DCS / PLC CONTROL WITH POSITION TRANSMITTER AND SAFETY SOLENOID

NOTE 6

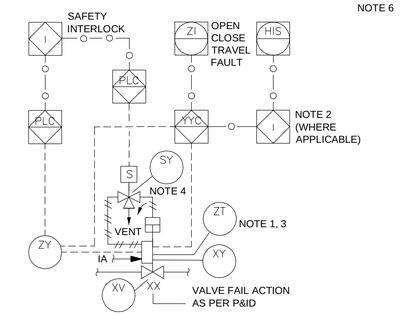

DETAIL 1E: ON/OFF PNEUMATIC ACTUATED DCS / PLC CONTROL WITH POSITION TRANSMITTER FOR SAFETY INTERLOCK

NOTE 6

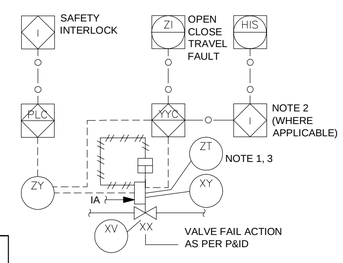

TAG	DESCRIPTION	I / O TYPE
ZSO	OPEN LIMIT SWITCH	DI
ZSC	CLOSE LIMIT SWITCH	DI
ZIO	LIMIT SWITCH INDICATION OPEN	SDI
ZIC	LIMIT SWITCH INDICATION CLOSE	SDI
ZA	VALVE STATUS	SOFT
HIS	VALVE SWITCH	SOFT
XY	SOLENOID VALVE/POSITIONER	DO/AO
ZT	POSITION TRANSMITTER	AI (SAFETY)
ZI	POSITION INDICATION	SOFT
XV	ON-OFF VALVE	N/A
SY	SAFETY SOLENOID (AS REQUIRED)	DO (SAFETY)
ZY	POSITION INDICATION (AS REQUIRED)	AI

VALVE FAIL POSITIONS	
SYMBOL	DESCRIPTION
FO	FAIL OPEN
FC	FAIL CLOSED
FL	FAIL LAST

NOTES:

1. LOOP NUMBERS FOR TAGS ARE TAKEN FROM THE VALVE TAG, AS SHOWN ON EACH P&ID THAT REFERENCES THIS DETAIL.
2. INTERLOCK NUMBER AND PROPER SYMBOL (DCS OR PLC) WILL BE SHOWN ON PROCESS P&ID.
3. FOR VALVES LOCATED IN PITS WITH EXTENDED VALVE STEMS / ACTUATORS, LIMIT SWITCH AND POSITIONER WILL BE LOCATED OUTSIDE THE PITS.
4. SAFETY SOLENOID VALVE (SY) IS TO TRIP THE VALVE TO ITS FAILURE POSITION.
5. REMOTELY MAINTAINABLE MODULATING CONTROL VALVES WILL UTILIZE A PNEUMATIC PISTON ACTUATOR.
6. ACTUATOR TYPE (SINGLE ACTING, DOUBLE ACTING, ETC.) AND SOLENOID TYPE (3-WAY, 4-WAY, ETC.) WILL BE SPECIFIED ON THE INDIVIDUAL VALVE DATASHEETS.
7. FOR COMPLETE CONTROLS AND STATUS INDICATIONS OF MOTORS, CONTROL STATIONS, AND VFDS, SEE I/O LIST DOCUMENT 31269-19-LST-0002.
8. EVERY SAFETY PLC ANALOG INPUT SIGNAL IS ALSO WIRED VIA A SIGNAL SPLITTER TO AN ANALOG INPUT IN THE DCS FOR MONITORING AND DIAGNOSTICS. 1a

IN-PROGRESS TO SUPPORT 60% DESIGN REVIEW NOT FOR CONSTRUCTION

REVISION APPROVAL RECORD					REV 1a
DISCIPLINE	BY	DATE	DISCIPLINE	BY	DATE
ARCH.			MECHANICAL		
BUILDING SERVICES			PIPING		
CIVIL			PROCESS		
ELECTRICAL			QA / QC		
ENVIRON.			STRUCTURAL		
GEN. ARRANG.			FP		
I & C					

DRAWING STATUS				
ISSUED	REV	DATE	SDE	PEM
PRELIMINARY				
IN-PROGRESS TO SUPPORT 60% DESIGN REVIEW	1a	01/23/17	MW	BGA

NOT APPROVED FOR CONSTRUCTION UNLESS SIGNED AND DATED. DESTROY ALL PRINTS BEARING EARLIER DATE AND/OR REV.NO.

AECOM — URS ENERGY & CONSTRUCTION Inc. - an AECOM Company

ATKINS — AREVA

AECOM PROJECT NO.: 31269

DWG NUMBER	TITLE

DRAWING TRACEABILITY LIST

REF NUMBER	TITLE

REFERENCES

NEXT USED ON H-16-000001

REV	DESCRIPTION	ORIG	CHK	APVD	IDV	DATE
1a	IN-PROGRESS TO SUPPORT 60% DESIGN REVIEW	GK	TN	MW	TBV	01/23/17
0	APPROVED FOR DESIGN	GK	TN	MW	N/A	09/19/16

MFD	REV NO.	DESCRIPTION
REV REF.		

REVISIONS

BLDG. NO. 202LP

INDEX NO. 7004

CAUTION NOT COMPLETE WITHOUT CURRENT CHANGE DOCUMENTS FROM DATABASE

ATTENTION DESTROY THIS DOCUMENT BY SHREDDING MAY CONTAIN SENSITIVE INFORMATION

NAME	DATE	COMPANY
DRAWN BY		
DRAFTING APPROVAL		
DISCIPLINE ENGINEER		
ENGINEER		

U.S. DEPARTMENT OF ENERGY
Office of River Protection

LAWPS
P&ID INSTRUMENT SYMBOLS

SIZE	DRAWING NUMBER	SHEET	REV
F	H-16-000003	1	1a

SCALE NONE

PLOTID

DOE_TB_F.DWG (JAN 2012)